Jul. 2010

SERVICE MANUAL ADDENDUM

IC-F5061 IC-F5062 IC-F5063 IC-F5061D IC-F5062D

CONTENTS

REPLACEMENT PAGES. 6-1, 6-2
PARTS LIST 1
BOARD LAYOUTS 14
VOLTAGE DIAGRAM 16

[VERSION LIST]

MODEL	VERSION	CHANNEL SPACING	TX POWER	MDC	UT-126H preinstalled
IC-F5061	USA-01	15.0/30.0 kHz	50 W	Not compatible	No
	USA-02			Compatible	
IC-F5062	EUR-01	12.5/25.0 kHz	25 W	Not compatible	
	EUR-02			Compatible	
IC-F5063	EXP-01	12.5/20/25.0 kHz		Not compatible	
	EXP-02			Compatible	
IC-F5061D	USA-01	6.25/15.0/30.0 kHz	50 W	Compatible	Yes
	USA-11				
	USA-12				
	CHN-01				
IC-F5062D	EUR-03	6.5/12.5/20/25 kHz	25W		
IC-F5062D	DPM-01				

SECTION 6 ADJUSTMENT PROCEDURES

6-1 PREPARATION

■ REQUIRED TEST EQUIPMENTS

EQUIPMENT	GRADE AND RANGE
Adjustment software (Rev. 1.1 or later)	CS-F5060 ADJ (For [USA-01]*, [EXP-01], [EUR-01]) CS-F3160/5060 ADJ (For [USA-02], [EXP-02], [EUR-02], [USA-01]**, [EUR-03], [CHN-01], [USA-11], [USA-12]) CS-F3160/5060 ADJ (dPMR): (For [DPM-01])
modulation analyzer	Frequency range : DC–300 MHz Measuring range : 0 to ±10 kHz
Frequency counter	Frequency range : 0.1–300 MHz Frequency accuracy : ±1 ppm or better Sensitivity : 100 mV or better
Digital voltmeter	Input impedance : 50 kΩ Measuring range : 0.1–10V
RF power meter	Measuring range : 0.1–60 W [USA], [CHN] 0.1–30 W [EUR], [EXP] Frequency range : 100–300 MHz Impedance : 50 Ω SWR : Better than 1.2 : 1
DC power supply	Output voltage : 13.6 V DC [USA], [CHN] 13.2 V DC [EUR], [EXP], [DPM] Current capacity : More than 1.5 A
External speaker	Input impedance : 4 Ω Capacity : 5 W or more
Standard signal generator (SSG)	Frequency range : 0.1–300 MHz Output level : 0.1 µV to 32 mV (–127 to –17 dBm)
Oscilloscope	Frequency range : DC–20 MHz Measuring range : 0.01–20 V

*: [USA-01] of IC-F5061 **: [USA-01] of IC-F5061D

■ SYSTEM REQUIREMENTS (for the ADJUSTMENT SOFTWARE)

• Microsoft® Windows® 98/98SE/Me/2000/XP • RS-232C serial port (D-sub 9 pin)

■ ADJUSTMENT SOFTWARE INSTALLATION

① Quit all applications when Windows is running.
② Insert the CD into the appropriate CD drive.
③ Double-click the “Setup.exe” contained in the ‘CS-F5060 ADJ’ folder in the CD drive.
④ The “Welcome to the InstallShield Wizard for CS-F5060 ADJ” will appear. Click [Next>].
⑤ The “Choose Destination Location” will appear. Then click [Next>] to install the software to the destination folder. (e.g. C:\Program Files\Icom\CS-F5060 ADJ)
⑥ After the installation is completed, the “InstallShield Wizard Complete” will appear. Then click [Finish].
⑦ Eject the CD.
⑧ Program group ‘CS-F5060 ADJ’ appears in the ‘Programs’ folder of the start menu, and ‘CS-F5060 ADJ’ icon appears on the desk top screen.

■ STARTING SOFTWARE ADJUSTMENT

① Connect the transceiver and PC with RS-232C cable and JIG CABLE.
② Turn the transceiver power ON.
③ Boot up Windows, and click the program group ‘CS-F5060 ADJ’ in the ‘Programs’ folder of the [Start] menu, then CS-F5060 ADJ’s window appears.
④ Click ‘Connect’ on the CS-F5060 ADJ’s window, then the window shows transceiver’s condition and adjustment items as below.
⑤ Set or modify adjustment data as specified.

Microsoft and Windows are registered trademarks of Microsoft Corporation in the U.S.A. and other countries.

■ BEFORE STARTING SOFTWARE ADJUSTMENT

Clone the adjustment frequencies and settings into the transceiver, and set the configuration using the CS-F5060 CLONING SOFTWARE before starting the software adjustment. Otherwise, the software adjustment can not be started.

CAUTION!: BACK UP the originally programmed memory data in the transceiver before programming the adjustment frequencies. When program the adjustment frequencies into the transceiver, the transceiver’s memory data will be overwritten and lose original memory data at the same time.

• ADJUSTMENT FREQUENCY LIST

CH	FREQUENCY	SETTING	CH	FREQUENCY	SETTING
1	154.900 MHz	• TX power : Low1 • Mode : Narrow	10	174.000 MHz	• TX power : Low1 • Mode : Narrow
2	174.000 MHz	• TX power : Low1 • Mode : Wide	11*	155.000 MHz	• TX power : Low1 • Mode : Middle
3	136.000 MHz	• TX power : Low1 • Mode : Wide	12*	136.000 MHz	• TX power : High • Mode : Middle
4	155.000 MHz	• TX power : Low1 • Mode : Wide	13*	174.000 MHz	• TX power : Low2 • Mode : Middle
5	136.000 MHz	• TX power : High • Mode : Narrow	14	155.000 MHz	• TX power : Low1 • Mode : Digital
6	136.000 MHz	• TX power : Low2 • Mode : Wide	15	136.000 MHz	• TX power : Low1 • Mode : Digital
7	155.000 MHz	• TX power : Low1 • Mode : Middle • DTCS : 007	16	174.000 MHz	• TX power : Low1 • Mode : Digital
8	155.000 MHz	• TX power : Low1 • Mode : Narrow	17	136.000 MHz	• TX power : Low1 • CTCSS : 151.4 Hz
9	136.000 MHz	• TX power : Low1 • Mode : Narrow	18	136.000 MHz	• TX power : Low1 • Mode : Wide • DTMF : P3

*; [EUR] only

CONVENIENT: The same cloning file is available.
Right-click below, and select "Save Embeded File to Disk."

NOTE: FOR IC-F5062 and IC-F5062D, when adjust “Deviation,” “Modulation Balance,” “RX SENSITIVITY” and “S-meter” in the middle band, change the bandwidth to “Middle” as below.

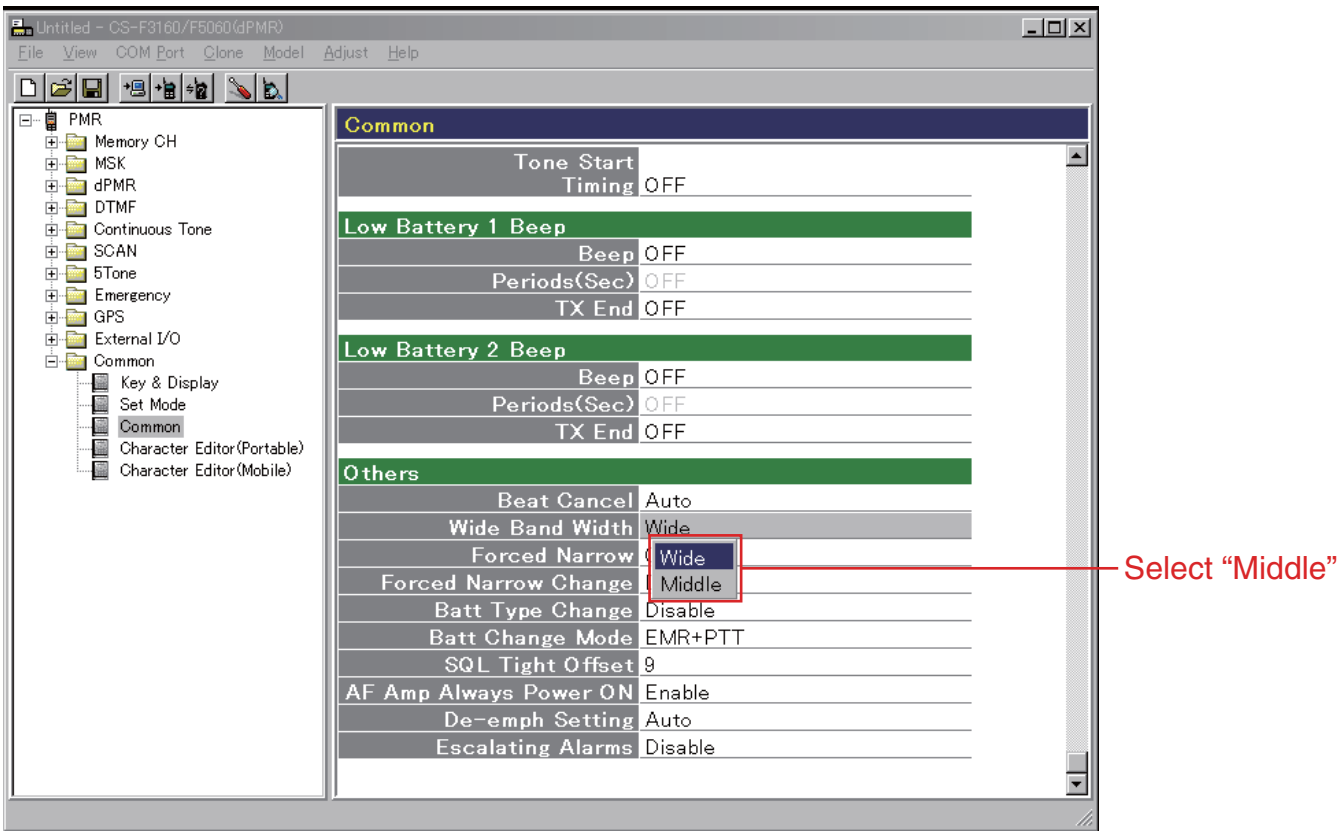

PARTS LIST

[VERSION LIST]

MODEL	VERSION	SYMBOL
IC-F5061	USA-01	[A]
	USA-02	[B]
IC-F5062	EUR-01	[C]
	EUR-02	[D]
IC-F5063	EXP-01	[E]
	EXP-02	[F]
IC-F5061D	USA-01	[G]
	USA-11	[H]
	USA-12	[I]
	CHN-01	[J]
IC-F5062D	EUR-03	[K]
IC-F5062D	DPM-01	[L]

[MAIN UNIT] (Other than "MDC compatible")

REF NO.	PARTS NO.	DESCRIPTION		M.	H/V LOCATION
IC1	1110005340	S.IC NJM12902V-TE1-#ZZZB		T	82.3/12.9
IC2	1110006221	S.IC AK2346P-E2/P		B	44.7/11.7
IC3	1140013200	S.IC CD4053BPWR		B	58.7/9.3
IC4	1130010100	S.IC LMX2352TMX/NOPB		T	82.9/46
IC5	1110003491	S.IC TA31136FNG(D,EL)		T	28/13.9
IC6	1190001350	S.IC M62364FP 600D		B	84.9/12.9
IC7	1110005340	S.IC NJM12902V-TE1-#ZZZB		T	108.5/43.7
IC8	1140013200	S.IC CD4053BPWR		B	58.7/16.1
IC9	1130012960	S.IC BU8872FS-E2		B	133.1/21.3
IC10	1190002051	S.IC SPM5001-TL-E		B	33.8/36.9
IC12	1190001340	S.IC M62334FP 600C		B	9.1/25.7
IC13	1110005771	S.IC S-80942CNMC-G9CT2G		B	126/44.8
IC14	1140014550	S.IC HD64F2506RFC26DV(EMPTY)		B	111.8/35.7
IC15	1150002073	IC RA60H1317M-125	[A]		
	1150002042	IC RA30H1317M-121	[E]		
	1150002042	IC RA30H1317M-121	[C]		
IC16	1140012950	S.IC 24LC512T-I/SM <SEI>		B	133.3/29
IC17	1110002751	S.IC TA75S01F(TE85R,F)		T	54.1/70.4
IC18	1180000970	S.IC AN78L05M-(E1)		B	113/65.3
IC19	1120002510	S.IC DS14C232TM S		T	104.7/70.5
IC20	1180001252	S.IC TA7808F(TE16L1,NQ)		B	121.5/65.8
IC21	1110003091	IC LA4425A-E			
IC22	1110002751	S.IC TA75S01F(TE85R,F)		B	135.5/54.4
IC23	1130006221	S.IC TC4W53FU(TE12L,F)		B	106.9/9.6
Q1	1590003231	S.TRA UNR9113G0L		B	15.2/6
Q3	1530002851	S.TRA 2SC4116-BL(TE85R,F)		B	36.4/15.5
Q4	1590001650	S.TRA XP4601(TX)		B	92.8/12.4
Q5	1590003291	S.TRA UNR9213G0L		B	76.7/50
Q6	1530002851	S.TRA 2SC4116-BL(TE85R,F)		T	63.2/55.1
Q7	1560000541	S.FET 2SK880-Y(T5RICOM,F)		B	81.2/27.1
Q8	1530002851	S.TRA 2SC4116-BL(TE85R,F)		B	79.2/31.8
Q9	1530002851	S.TRA 2SC4116-BL(TE85R,F)		B	81.7/31.8
Q10	1560001360	S.FET 2SK3019 TL		B	57/31.6
Q12	1530002601	S.TRA 2SC4215-O(TE85R,F)		T	26.9/20
Q13	1530002851	S.TRA 2SC4116-BL(TE85R,F)		B	31.8/9.9
Q16	1590003291	S.TRA UNR9213G0L		T	113.2/47.6
Q17	1530002920	S.TRA 2SC4226-T1 R25		T	50.9/47.6
Q18	1530002920	S.TRA 2SC4226-T1 R25		T	61.6/42.6
Q19	1530002920	S.TRA 2SC4226-T1 R25		T	72.1/43
Q20	1590003231	S.TRA UNR9113G0L		B	33.9/25.2
Q22	1530003311	S.TRA 2SC5107-O(TE85R,F)		T	58.1/46.3
Q23	1590001400	S.TRA XP1214(TX)		B	55.7/40.9
Q24	1590003281	S.TRA UNR9211G0L		B	55.8/38.2
Q25	1530003311	S.TRA 2SC5107-O(TE85R,F)		B	65.9/49.5
Q26	1590001400	S.TRA XP1214(TX)		B	67.2/43.1
Q27	1590003231	S.TRA UNR9113G0L		T	124.7/52
Q28	1590003291	S.TRA UNR9213G0L		B	123.4/46.3
Q29	1530003311	S.TRA 2SC5107-O(TE85R,F)		B	53.5/51.2
Q30	1530000372	S.TRA 2SC3356-T1B R (R24)		B	65.5/66
Q31	1580000731	S.FET 3SK293(TE85L,F)		B	10.2/38.6
Q32	1560000841	S.FET 2SK1829(TE85R,F)		T	11/42.5
Q33	1530002851	S.TRA 2SC4116-BL(TE85R,F)	[A] only	T	47.5/69.4
Q34	1590003291	S.TRA UNR9213G0L		T	83/67.4
Q35	1520000460	S.TRA 2SB1132 T100 R		T	100.1/57.9
Q36	1590001190	S.TRA XP6501-(TX).AB		T	104.3/55.8
Q37	1540000550	S.TRA 2SD1664 T100Q		T	75.5/63.6
Q38	1510000920	S.TRA 2SA1577 T106 Q		T	39.3/21.3
Q39	1590003291	S.TRA UNR9213G0L		T	42.6/21.3
Q40	1590003291	S.TRA UNR9213G0L		T	104.1/51.9
Q41	1590001451	S.FET 2SJ144-GR (TE85R,F)		B	110.3/83.3
Q42	1590003291	S.TRA UNR9213G0L		B	132.1/45
Q43	1590000990	S.TRA DTC363EK T146		B	135.7/49
Q44	1590003291	S.TRA UNR9213G0L		T	108.5/21.6
Q45	1590003291	S.TRA UNR9213G0L		B	133.3/58.9
Q46	1590003291	S.TRA UNR9213G0L		T	117.9/84.4
Q47	1550000100	S.FET 2SJ377 (TE16L1,NQ)		B	131.3/71.5
Q48	1590003291	S.TRA UNR9213G0L		B	124.9/77.7
Q49	1530002851	S.TRA 2SC4116-BL(TE85R,F)		B	139.3/37.2
Q50	1530002601	S.TRA 2SC4215-O(TE85R,F)		T	40.6/39.2
Q51	1590003321	S.FET TPC6103(TE85L,F)		B	133.6/63.4
Q52	1590003291	S.TRA UNR9213G0L		B	128.2/61.1
Q53	1590000430	S.TRA DTC144EUA T106		B	52.3/67.4
Q54	1590000430	S.TRA DTC144EUA T106		T	25.5/6.3
Q55	1560001360	S.FET 2SK3019 TL		T	75.5/20.9
Q57	1590003291	S.TRA UNR9213G0L		T	112/14.4
D1	1750001070	S.DIO DAN235ETL		T	10.4/15.7
D2	1750001070	S.DIO DAN235ETL		T	22.6/8.9
D3	1790001251	S.DIO MA2S1110GL		T	61.3/55
D4	1790001261	S.DIO MA2S077G0L		B	72.9/49.8
D5	1790001261	S.DIO MA2S077G0L		B	71.1/51.3
D6	1750001070	S.DIO DAN235ETL		T	30.6/20.8
D7	1160000140	S.DIO DAP222 TL		T	58.9/14
D8	1720000791	S.VAR HVC321B1TRF-E		T	49.5/32.4
D9	1720000791	S.VAR HVC321B1TRF-E		T	52.7/32.4
D10	1720000791	S.VAR HVC321B1TRF-E		T	60.5/30
D11	1720000641	S.VAR 1SV284(TPH3,F)		T	52.7/33.6
D12	1720000641	S.VAR 1SV284(TPH3,F)		T	52.7/34.8
D13	1720000791	S.VAR HVC321B1TRF-E		T	63.8/28.6
D14	1720000791	S.VAR HVC321B1TRF-E		T	73.6/30.4
D15	1720000641	S.VAR 1SV284(TPH3,F)		T	63.8/31.3
D17	1720000791	S.VAR HVC321B1TRF-E		T	72.1/27.9
D18	1750000721	S.VAR HVC375BTRF-E		T	69.8/33.3
D19	1160000140	S.DIO DAP222 TL		B	120.5/17.8
D20	1720000471	S.VAR 1SV239(TPH3,F)		T	69.4/34.9

M.=Mounted side (T: Mounted on the Top side, B: Mounted on the Bottom side)
S.=Surface mount

[MAIN UNIT] (Other than "MDC compatible")

REF NO.	PARTS NO.	DESCRIPTION	M.	H/V LOCATION
D21	1750001070	S.DIO DAN235ETL	T	36.3/38.3
D22	1750000520	S.DIO DAN222TL	T	124.7/54.5
D23	1790001261	S.DIO MA2S077G0L	T	125.6/39.2
D24	1790001261	S.DIO MA2S077G0L	B	50.7/53.2
D25	1790001261	S.DIO MA2S077G0L	B	49.3/50.8
D26	1750000711	S.VAR HVC350BTRF-E	B	17.7/36
D27	1750000711	S.VAR HVC350BTRF-E	B	16.2/36
D28	1750000370	S.DIO DA221 TL	T	10/37.5
D29	1790001251	S.DIO MA2S1110GL	T	12/39.5
D30	1750000721	S.VAR HVC375BTRF-E	B	8.6/44.7
D31	1790001251	S.DIO MA2S1110GL	T	8.5/43.7
D32	1750001080	S.DIO RB886G T2R	T	64.1/76.5
D33	1750001080	S.DIO RB886G T2R	T	65.8/75.8
D34	1750000721	S.VAR HVC375BTRF-E	B	8.6/47.4
D35	1790001621	S.DIO 1SV308(TPL3,F)	B	17.9/48.1
D36	1790001241	S.DIO MA2S7280GL [E]	B	16.5/48.1
	1790001241	S.DIO MA2S7280GL [C]		
D37	1750000370	S.DIO DA221 TL	T	75.5/67.6
D38	1750000511	S.DIO UX9401F-STD/TR <INT> [E]	T	30/66
	1750000511	S.DIO UX9401F-STD/TR <INT> [C]		
D39	1710001061	DIO L407CDB [A] only		
D42	1750001360	S.DIO L709CER (9401)	T	34.6/58.7
D45	1750000520	S.DIO DAN222TL	T	91.8/57.5
D46	1750000520	S.DIO DAN222TL	T	89.6/57.5
D47	1790001211	S.DIO 1SS375-TL-E	B	29.2/63.8
D48	1750000520	S.DIO DAN222TL	B	93/61.5
D49	1790001211	S.DIO 1SS375-TL-E	B	6/52.8
D50	1750000370	S.DIO DA221 TL	B	97.2/65.8
D51	1790001211	S.DIO 1SS375-TL-E	B	3.9/79.7
D52	1750000520	S.DIO DAN222TL	B	132.5/41
D53	1790001251	S.DIO MA2S1110GL	B	133.3/47.3
D55	1750000370	S.DIO DA221 TL	B	108.8/57.4
D56	1750000370	S.DIO DA221 TL	T	108.8/60.6
D57	1750000370	S.DIO DA221 TL	B	95.1/65.8
D58	1750000520	S.DIO DAN222TL	T	94/57.5
D59	1750000520	S.DIO DAN222TL	B	104/80.4
D62	1790000700	DIO DSA3A1		
D63	1750000520	S.DIO DAN222TL	B	110.3/80.9
D65	1750000520	S.DIO DAN222TL	B	129.7/58.9
D66	1790001621	S.DIO 1SV308(TPL3,F)	T	33.9/38.8
D67	1790001621	S.DIO 1SV308(TPL3,F)	T	33.9/37.5
D68	1790001621	S.DIO 1SV308(TPL3,F)	T	29.9/23.2
D69	1790001621	S.DIO 1SV308(TPL3,F)	T	31.2/23.2
D70	1750000351	S.DIO 1SV252(TE85L,F)	T	73.6/75.5
D71	1730002411	S.ZEN MAZ8200GHL	T	118.3/86.3
D72	1750000520	S.DIO DAN222TL	T	87.4/57.5
D73	1750000520	S.DIO DAN222TL	B	93/64.5
FI1	2020001410	CER CFWLB450KGFA-B0 (CFWM450G)		
FI2	2020002470	S.CER CFWKA450KHFA001-R0	T	15.4/9.3
FI3	2030000500	S.MON DSF753SBF 46.35 MHz (FL-401)	T	24.7/28.4
FI4	2030000150	S.MON DSF753SB 46.350 MHz (FL-335)	T	35.6/28.4
FI5	2040001440	S.LC NFE31PT152Z1E9L (NFM60R20T152)	B	94.5/77
FI6	2040001440	S.LC NFE31PT152Z1E9L (NFM60R20T152)	B	94.5/73.7
FI7	2040001440	S.LC NFE31PT152Z1E9L (NFM60R20T152) [A] only	B	94.5/70.3
X1	6050012380	S.XTA CR-826 DSA535SD 15.3 MHz	T	84.2/34.7
X2	6050011730	S.XTA CR-765 SMD-49TA 3.6864 MHz <KDS>	T	48.3/11.6
X3	6070000300	S.DIS JTBM450CX24 <JJE>	T	37.1/10.3
X4	6050012320	S.XTA CR-818 SMD-49 4.194304 MHz <KDS>	T	139.1/21.9
X5	6050011720	S.XTA CR-764 SMD-49TB 19.6608 MHz <KDS>	T	120.5/44.3
L1	6200004660	S.COI MLF1608A 1R8K-T	T	82.7/54.3
L2	6200003540	S.COI MLF1608D R22K-T	B	34.4/14.7
L3	6200004480	S.COI MLF1608D R82K-T	B	29.7/16.2
L4	6200007911	S.COI ELJRF 18NJFB	B	75.9/48.3
L5	6200007120	S.COI ELJND 1R0J	T	49.4/30.8
L6	6200007120	S.COI ELJND 1R0J	T	52.7/30.8
L7	6200007120	S.COI ELJND 1R0J	T	60.5/28.4
L8	6200007170	S.COI MLF1608A 3R3K-T	T	74/27.5
L9	6200007170	S.COI MLF1608A 3R3K-T	T	69.8/32
L10	6200010600	S.COI C6342A-67NG-A	T	51.2/39.2
L11	6200003640	S.COI MLF1608E 100K-T	T	48.3/33.6
L12	6200009910	S.COI C6342A-88NG-A	T	61.6/35.5
L13	6200007120	S.COI ELJND 1R0J	T	63.8/27
L14	6200003640	S.COI MLF1608E 100K-T	T	60/31.4
L15	6200012450	S.COI 0.25-1.9-8TL 73N (COAT) <COMO>	T	73.3/35.9
L16	6200008090	S.COI LQW2BHN68NJ03L	T	69.5/28
L17	6200003640	S.COI MLF1608E 100K-T	T	73.7/32.6
L18	6130003000	S.COI #617DB-1714=P3	B	39/36.2
L19	6130003000	S.COI #617DB-1714=P3	B	34.5/42.6
L20	6200009181	S.COI ELJRE R10JFA	T	57.3/48.3
L21	6200007911	S.COI ELJRF 18NJFB	B	66.3/51.2
L22	6200005721	S.COI ELJRE 33NGFA	B	40.6/48.1
L23	6200005721	S.COI ELJRE 33NGFA	B	45.5/48.1
L24	6130003000	S.COI #617DB-1714=P3	B	27/36.2
L25	6200009151	S.COI ELJRE 82NJFA	B	54.2/53.4
L26	6200010720	S.COI C2520C-56NG-A	B	20.9/37
L27	6200009181	S.COI ELJRE R10JFA	B	66.5/69.4
L28	6200010720	S.COI C2520C-56NG-A	B	11.7/35.1
L29	6200009171	S.COI ELJRE 47NJFA	B	70.5/70.8
L30	6200009171	S.COI ELJRE 47NJFA	T	72.6/72.7
L31	6200010730	S.COI C2520C-68NG-A	B	7.8/41.5
L32	6200010730	S.COI C2520C-68NG-A	B	9.9/50.6

[MAIN UNIT] (Other than "MDC compatible")

REF NO.	PARTS NO.	DESCRIPTION	M.	H/V LOCATION
L33	6200010050	S.COI AS080547-47N	T	33.3/73.9
L34	6200007750	S.COI LQW2BHN56NJ03L	B	13.2/51.7
L35	6200006991	S.COI ELJRE 56NGFA	B	20.1/50.7
L36	6200010420	S.COI FHW1210HC 1R0JGT <JJE>	B	39.2/66
L37	6200010050	S.COI AS080547-47N	T	30/58.5
L38	6200010050	S.COI AS080547-47N	T	21.6/58
L39	6200010050	S.COI AS080547-47N	T	12.5/57.5
L40	6200010050	S.COI AS080547-47N	T	10.5/81
L41	6200002861	S.COI NLV25T-4R7J	T	122.3/54.4
L42	6200005011	S.COI NLV25T-100J	T	40.7/42.1
L43	6200010680	S.COI C2520C-R22G-A (0.22U)	T	42.1/34.9
L44	6200010740	S.COI C2520C-R27G-A	T	37.8/35.3
L45	6200003960	S.COI MLF1608A 1R0K-T	T	71.3/72.7
L46	6200005661	S.COI ELJRE 10NGFA	T	78.3/42.3
R1	7030005060	S.RES ERJ2GEJ 333 X (33K)	B	38.1/5.8
R2	7510001730	S.THE ERTJOEP 473J	T	90.4/35.6
R3	7030005050	S.RES ERJ2GEJ 103 X (10K)	T	79/11.9
R4	7030005700	S.RES ERJ2GEJ 274 X (270K)	B	88.5/18.9
R5	7030005090	S.RES ERJ2GEJ 104 X (100K)	T	90.4/34
R6	7030005160	S.RES ERJ2GEJ 105 X (1M)	T	84/19.4
R7	7030005230	S.RES ERJ2GEJ 334 X (330K)	T	84/17.5
R8	7410001130	S.ARR EXB28V102JX	T	86.1/52.4
R9	7030007570	S.RES ERJ2GEJ 122 X (1.2K)	B	34.3/11.6
R10	7030007060	S.RES ERJ2GEJ 684X (680K)	B	35.8/13.7
R11	7030010040	S.RES ERJ2GEJ-JPW	T	8.5/9.2
R12	7030004970	S.RES ERJ2GEJ 470 X (47)	T	31/17.2
R13	7030005600	S.RES ERJ2GEJ 273 X (27K)	T	8.8/15.9
R14	7030005210	S.RES ERJ2GEJ 822 X (8.2K)	T	7.5/7.4
R15	7030005070	S.RES ERJ2GEJ 683 X (68K)	B	93.3/14.4
R17	7030007570	S.RES ERJ2GEJ 122 X (1.2K)	B	93.3/15.3
R18	7030008300	S.RES ERJ2GEJ 184 X (180K)	B	79/11.8
R19	7030005230	S.RES ERJ2GEJ 334 X (330K)	T	89.3/9
R20	7030005090	S.RES ERJ2GEJ 104 X (100K)	T	85.6/8.3
R21	7030005070	S.RES ERJ2GEJ 683 X (68K)	T	86.6/8.3
R22	7030005050	S.RES ERJ2GEJ 103 X (10K)	B	38.1/7.5
R23	7030005050	S.RES ERJ2GEJ 103 X (10K)	B	38.1/9.2
R24	7030005060	S.RES ERJ2GEJ 333 X (33K)	B	37.2/10.5
R25	7030005120	S.RES ERJ2GEJ 102 X (1K)	B	100.9/51.4
R26	7030005000	S.RES ERJ2GEJ 471 X (470)	B	87.5/5.3
R27	7030007300	S.RES ERJ2GEJ 332 X (3.3K)	T	53.9/5.6
R28	7030010040	S.RES ERJ2GEJ-JPW	T	59.4/5.6
R29	7030005000	S.RES ERJ2GEJ 471 X (470)	T	116.4/14.5
R30	7030005170	S.RES ERJ2GEJ 474 X (470K)	B	37.2/9.2
R31	7030007340	S.RES ERJ2GEJ 153 X (15K)	B	36.3/9.2
R32	7030005720	S.RES ERJ2GEJ 563 X (56K)	B	37.2/7.5
R33	7030005160	S.RES ERJ2GEJ 105 X (1M)	T	80.7/8.4
R34	7030005040	S.RES ERJ2GEJ 472 X (4.7K)	T	80.7/7.2
R35	7030005120	S.RES ERJ2GEJ 102 X (1K)	T	77.6/9.5
R36	7030005030	S.RES ERJ2GEJ 152 X (1.5K)	B	27/14.7
R37	7030007300	S.RES ERJ2GEJ 332 X (3.3K)	B	15.2/8.6
R38	7030005210	S.RES ERJ2GEJ 822 X (8.2K)	T	22.9/6.2
R39	7030005600	S.RES ERJ2GEJ 273 X (27K)	T	24/9.1
R40	7030005170	S.RES ERJ2GEJ 474 X (470K)	T	25.9/10.6
R41	7030007290	S.RES ERJ2GEJ 222 X (2.2K)	T	27.6/6.2
R42	7030005090	S.RES ERJ2GEJ 104 X (100K)	B	94.8/11.7
R43	7030007300	S.RES ERJ2GEJ 332 X (3.3K)	B	94.8/10
R44	7030007340	S.RES ERJ2GEJ 153 X (15K)	B	90.7/11.9
R45	7030005220	S.RES ERJ2GEJ 223 X (22K)	B	92.8/10
R46	7030005040	S.RES ERJ2GEJ 472 X (4.7K)	T	92.1/14.1
R47	7030005050	S.RES ERJ2GEJ 103 X (10K)	T	92.1/13.1
R48	7030005060	S.RES ERJ2GEJ 333 X (33K)	B	50.9/8.6
R49	7030005160	S.RES ERJ2GEJ 105 X (1M)	B	49.7/13.7
R50	7030005090	S.RES ERJ2GEJ 104 X (100K)	B	49.7/11
R51	7030005210	S.RES ERJ2GEJ 822 X (8.2K)	T	52.4/7
R52	7030007340	S.RES ERJ2GEJ 153 X (15K)	T	59.1/12.5
R53	7030005000	S.RES ERJ2GEJ 471 X (470)	T	86.2/37.7
R54	7030010040	S.RES ERJ2GEJ-JPW	B	78.7/36.4
R55	7030005290	S.RES ERJ2GEJ 682 X (6.8K)	T	81.8/25.3
R56	7030005040	S.RES ERJ2GEJ 472 X (4.7K)	B	77.7/48.4
R57	7030005090	S.RES ERJ2GEJ 104 X (100K)	B	28.3/14.3
R58	7030005050	S.RES ERJ2GEJ 103 X (10K)	T	27.6/9
R59	7030005170	S.RES ERJ2GEJ 474 X (470K)	T	27.6/8.1
R60	7030005000	S.RES ERJ2GEJ 471 X (470)	T	30.9/10.2
R61	7030005040	S.RES ERJ2GEJ 472 X (4.7K)	T	28.8/8.5
R62	7030005040	S.RES ERJ2GEJ 472 X (4.7K)	B	32.2/11.9
R63	7030005220	S.RES ERJ2GEJ 223 X (22K)	B	92.8/8.3
R64	7030005220	S.RES ERJ2GEJ 223 X (22K)	B	92.8/6.5
R65	7030005090	S.RES ERJ2GEJ 104 X (100K)	B	50.9/9.5
R66	7030005050	S.RES ERJ2GEJ 103 X (10K)	T	86.6/11.8
R67	7030005210	S.RES ERJ2GEJ 822 X (8.2K)	T	53.4/7
R68	7030007290	S.RES ERJ2GEJ 222 X (2.2K)	B	53.7/17.9
R69	7030010040	S.RES ERJ2GEJ-JPW	T	85.6/13.6
R71	7030005090	S.RES ERJ2GEJ 104 X (100K)	T	57.7/6.3
R72	7030007290	S.RES ERJ2GEJ 222 X (2.2K)	T	64.9/55.6
R73	7030005000	S.RES ERJ2GEJ 471 X (470)	B	83.2/26.9
R74	7030007300	S.RES ERJ2GEJ 332 X (3.3K)	B	81.8/25.3
R75	7030009140	S.RES ERJ2GEJ 272 X (2.7K)	B	79.2/34
R76	7030007340	S.RES ERJ2GEJ 153 X (15K)	B	80.3/29.1
R77	7030005580	S.RES ERJ2GEJ 560 X (56)	T	78.2/47.2
R78	7030005070	S.RES ERJ2GEJ 683 X (68K)	B	81.5/34
R79	7030005040	S.RES ERJ2GEJ 472 X (4.7K)	B	74.8/50
R80	7030005040	S.RES ERJ2GEJ 472 X (4.7K)	B	70/50.9
R81	7030005110	S.RES ERJ2GEJ 224 X (220K)	B	55.5/31.4
R82	7030005110	S.RES ERJ2GEJ 224 X (220K)	B	66.3/33.3
R83	7030008400	S.RES ERJ2GEJ 182 X (1.8K)	T	32.6/10.2
R84	7030007280	S.RES ERJ2GEJ 331 X (330)	T	24.6/20.3
R85	7030005110	S.RES ERJ2GEJ 224 X (220K)	T	24.6/21.2
R86	7030007300	S.RES ERJ2GEJ 332 X (3.3K)	B	30/10.5
R87	7030007300	S.RES ERJ2GEJ 332 X (3.3K)	T	32.2/20.6
R88	7030005120	S.RES ERJ2GEJ 102 X (1K)	B	91.7/6.5
R90	7030005000	S.RES ERJ2GEJ 471 X (470)	B	89.4/18.9
R91	7030005700	S.RES ERJ2GEJ 274 X (270K)	T	85.6/11.8
R92	7030005090	S.RES ERJ2GEJ 104 X (100K)	T	87.3/13.4

M.=Mounted side (T: Mounted on the Top side, B: Mounted on the Bottom side)
S.=Surface mount

[MAIN UNIT] (Other than "MDC compatible")

REF NO.	PARTS NO.	DESCRIPTION	M.	H/V LOCATION
R93	7030005310	S.RES ERJ2GEJ 124 X (120K)	T	83.9/8.2
R94	7030005080	S.RES ERJ2GEJ 823 X (82K)	T	108/34.7
R95	7030005720	S.RES ERJ2GEJ 563 X (56K)	T	108/33.8
R96	7030005240	S.RES ERJ2GEJ 473 X (47K)	B	63.7/15.5
R97	7030005060	S.RES ERJ2GEJ 333 X (33K)	B	53.3/16.6
R98	7030005040	S.RES ERJ2GEJ 472 X (4.7K)	B	62.1/19.4
R99	7030005240	S.RES ERJ2GEJ 473 X (47K)	B	60.2/19.4
R100	7030005030	S.RES ERJ2GEJ 152 X (1.5K)	B	77.9/34.4
R101	7030008280	S.RES ERJ2GEJ 271 X (270)	B	79.2/29.1
R102	7030005530	S.RES ERJ2GEJ 100 X (10)	T	23/20.3
R103	7030005600	S.RES ERJ2GEJ 273 X (27K)	B	29.9/23.8
R104	7030007280	S.RES ERJ2GEJ 331 X (330)	T	26.9/22.6
R105	7030005600	S.RES ERJ2GEJ 273 X (27K)	B	30.9/23.8
R106	7030007270	S.RES ERJ2GEJ 151 X (150)	T	34.3/22.5
R107	7030007340	S.RES ERJ2GEJ 153 X (15K)	B	129.7/52.3
R108	7030005240	S.RES ERJ2GEJ 473 X (47K)	B	82.3/18.9
R109	7030005700	S.RES ERJ2GEJ 274 X (270K)	B	81.3/18.9
R110	7030005050	S.RES ERJ2GEJ 103 X (10K)	T	78.4/20.2
R111	7030005050	S.RES ERJ2GEJ 103 X (10K)	T	95.9/28.3
R112	7030005700	S.RES ERJ2GEJ 274 X (270K)	T	80.8/20.1
R113	7030005240	S.RES ERJ2GEJ 473 X (47K)	B	57.9/19.4
R114	7030005090	S.RES ERJ2GEJ 104 X (100K)	B	53.7/13.3
R115	7030005090	S.RES ERJ2GEJ 104 X (100K)	T	114.4/18.4
R116	7030005090	S.RES ERJ2GEJ 104 X (100K)	B	85.3/7.3
R118	7030006610	S.RES ERJ2GEJ 394 X (390K)	T	89.5/11.7
R120	7030009280	S.RES ERJ2GEJ 391 X	T	30.3/34.3
R122	7030005600	S.RES ERJ2GEJ 273 X (27K)	T	32.3/35.2
R123	7030005600	S.RES ERJ2GEJ 273 X (27K)	T	33.5/35.2
R125	7030004970	S.RES ERJ2GEJ 470 X (47)	T	35/34
R127	7030005050	S.RES ERJ2GEJ 103 X (10K)	B	79.1/18.3
R128	7030008290	S.RES ERJ2GEJ 183 X (18K)	T	112.1/45.1
R129	7030005040	S.RES ERJ2GEJ 472 X (4.7K)	T	112.1/44.1
R130	7030005070	S.RES ERJ2GEJ 683 X (68K)	T	104.9/43.2
R131	7030005070	S.RES ERJ2GEJ 683 X (68K)	T	104.9/44.1
R132	7030004980	S.RES ERJ2GEJ 101 X (100)	T	114.4/17.5
R134	7030005160	S.RES ERJ2GEJ 105 X (1M)	T	128.9/26.3
R135	7030005160	S.RES ERJ2GEJ 105 X (1M)	T	128.9/25.3
R136	7030005160	S.RES ERJ2GEJ 105 X (1M)	T	128.9/24.2
R139	7410001140	S.ARR EXB28V104JX	T	130.6/20.6
R140	7030011000	S.RES RR0510P-392-D (3.9K)	T	48.1/47.2
R141	7030008340	S.RES RR0510P-182-D (1.8K)	T	50.8/45.4
R142	7030010040	S.RES ERJ2GEJ-JPW	T	49/47.2
R143	7030011000	S.RES RR0510P-392-D (3.9K)	T	58.7/42.2
R144	7030008340	S.RES RR0510P-182-D (1.8K)	T	61.7/40.4
R145	7030010040	S.RES ERJ2GEJ-JPW	T	59.6/42.2
R146	7030011000	S.RES RR0510P-392-D (3.9K)	T	71.8/45.8
R147	7030008340	S.RES RR0510P-182-D (1.8K)	T	70/41.9
R148	7030010040	S.RES ERJ2GEJ-JPW	T	71.8/44.9
R149	7030005310	S.RES ERJ2GEJ 124 X (120K)	T	69.1/36.3
R150	7030005240	S.RES ERJ2GEJ 473 X (47K)	T	89.8/15.5
R151	7030005060	S.RES ERJ2GEJ 333 X (33K)	T	91/16.1
R152	7030005090	S.RES ERJ2GEJ 104 X (100K)	T	88.9/16.4
R153	7030007300	S.RES ERJ2GEJ 332 X (3.3K)	T	39.9/32.2
R154	7030009530	S.RES ERJ2GEJ 270 X (27)	T	42.9/40.1
R155	7030005120	S.RES ERJ2GEJ 102 X (1K)	T	41.7/32.4
R156	7030004970	S.RES ERJ2GEJ 470 X (47)	T	42.5/41.3
R157	7030005090	S.RES ERJ2GEJ 104 X (100K)	B	33.7/23.6
R158	7030005240	S.RES ERJ2GEJ 473 X (47K)	T	112.1/42.3
R159	7030005240	S.RES ERJ2GEJ 473 X (47K)	T	112.1/40.5
R160	7030005240	S.RES ERJ2GEJ 473 X (47K)	T	113.8/38.7
R161	7030005070	S.RES ERJ2GEJ 683 X (68K)	T	104.9/46.8
R162	7030005240	S.RES ERJ2GEJ 473 X (47K)	T	128.2/14.4
R163	7030005240	S.RES ERJ2GEJ 473 X (47K)	T	128.7/16.3
R164	7030005240	S.RES ERJ2GEJ 473 X (47K)	T	129.4/14.4
R165	7030005230	S.RES ERJ2GEJ 334 X (330K)	T	128.7/17.8
R166	7030005230	S.RES ERJ2GEJ 334 X (330K)	T	128.7/18.7
R167	7030005230	S.RES ERJ2GEJ 334 X (330K)	T	129.8/16.2
R168	7030006581	S.RES ERA3YED 122V (1.2K)	T	53.6/47.5
R169	7030007230	S.RES ERA3YED 102V (1K)	T	63.8/42.6
R170	7030010390	S.RES ERA3YED 821V (820)	T	74.1/43.2
R171	7030005090	S.RES ERJ2GEJ 104 X (100K)	T	56.3/46.7
R172	7030008280	S.RES ERJ2GEJ 271 X (270)	B	36.4/46.4
R173	7030007270	S.RES ERJ2GEJ 151 X (150)	B	39/31.2
R174	7030004980	S.RES ERJ2GEJ 101 X (100)	B	34.6/38.7
R175	7030004980	S.RES ERJ2GEJ 101 X (100)	B	33/38.7
R176	7030005590	S.RES ERJ2GEJ 680 X (68)	B	31.3/37.4
R177	7030005590	S.RES ERJ2GEJ 680 X (68)	B	31.3/34.9
R178	7030005240	S.RES ERJ2GEJ 473 X (47K)	T	113.8/37.8
R179	7030008300	S.RES ERJ2GEJ 184 X (180K)	T	117.6/34.6
R180	7030005720	S.RES ERJ2GEJ 563 X (56K)	T	118.3/35.3
R181	7030005220	S.RES ERJ2GEJ 223 X (22K)	T	119/36
R182	7030005120	S.RES ERJ2GEJ 102 X (1K)	T	116.9/33.9
R183	7030005070	S.RES ERJ2GEJ 683 X (68K)	T	103.1/46.8
R184	7030005220	S.RES ERJ2GEJ 223 X (22K)	T	113.8/36.9
R185	7030005070	S.RES ERJ2GEJ 683 X (68K)	B	102.3/45.6
R186	7030005160	S.RES ERJ2GEJ 105 X (1M)	T	81.8/18.9
R187	7030005060	S.RES ERJ2GEJ 333 X (33K)	T	80.6/17.5
R188	7030005090	S.RES ERJ2GEJ 104 X (100K)	T	78.5/14.9
R189	7030005720	S.RES ERJ2GEJ 563 X (56K)	T	78.5/15.8
R190	7030007350	S.RES ERJ2GEJ 393 X (39K)	T	80.6/18.4
R191	7030004980	S.RES ERJ2GEJ 101 X (100)	T	60.5/47
R192	7030004980	S.RES ERJ2GEJ 101 X (100)	B	66.3/53.2
R193	7030005050	S.RES ERJ2GEJ 103 X (10K)	B	66.3/45.2
R194	7030005110	S.RES ERJ2GEJ 224 X (220K)	B	62.7/50.8
R195	7030009320	S.RES ERJ2GEJ 4R7 X (4.7)	B	55.8/50.3
R196	7030005120	S.RES ERJ2GEJ 102 X (1K)	B	65.2/42.8
R197	7030005050	S.RES ERJ2GEJ 103 X (10K)	B	64.7/44.5
R198	7030010090	S.RES ERJ2GEJ 180 X (18)	B	36/47.6
R199	7030008280	S.RES ERJ2GEJ 271 X (270)	B	37.3/47.6
R200	7030005050	S.RES ERJ2GEJ 103 X (10K)	B	8.4/20.6
R201	7410001130	S.ARR EXB28V102JX	B	117/51.7
R202	7030005090	S.RES ERJ2GEJ 104 X (100K)	B	122.5/44.8
R203	7030005120	S.RES ERJ2GEJ 102 X (1K)	B	127.4/47.3
R204	7410000750	S.ARR EXB-V4V 104JV (100K)	B	129.6/42.7
R205	7030008010	S.RES ERJ2GEJ 123 X (12K)	T	127.5/40.1

[MAIN UNIT] (Other than "MDC compatible")

REF NO.	PARTS NO.	DESCRIPTION	M.	H/V LOCATION
R206	7030005120	S.RES ERJ2GEJ 102 X (1K)	B	127/39.5
R207	7030005050	S.RES ERJ2GEJ 103 X (10K)	T	120.9/37.5
R208	7030005050	S.RES ERJ2GEJ 103 X (10K)	T	121.6/38.2
R209	7410001130	S.ARR EXB28V102JX	B	125.8/40.8
R210	7030008010	S.RES ERJ2GEJ 123 X (12K)	T	124.2/38.4
R211	7030008010	S.RES ERJ2GEJ 123 X (12K)	T	125.9/41.1
R212	7030005160	S.RES ERJ2GEJ 105 X (1M)	T	122.1/41.1
R213	7030005090	S.RES ERJ2GEJ 104 X (100K)	B	55.3/51.8
R214	7030004980	S.RES ERJ2GEJ 101 X (100)	B	56.4/54
R215	7030005050	S.RES ERJ2GEJ 103 X (10K)	B	63.5/61.3
R216	7030005590	S.RES ERJ2GEJ 680 X (68)	B	61.9/62.3
R218	7030010040	S.RES ERJ2GEJ-JPW	B	56.4/51.8
R219	7030005050	S.RES ERJ2GEJ 103 X (10K)	B	46/49.8
R220	7030005040	S.RES ERJ2GEJ 472 X (4.7K)	B	49.3/52
R221	7030005050	S.RES ERJ2GEJ 103 X (10K)	B	44.4/49.8
R222	7030005090	S.RES ERJ2GEJ 104 X (100K)	B	17.7/33.9
R223	7030005090	S.RES ERJ2GEJ 104 X (100K)	B	16.2/33.9
R224	7030005050	S.RES ERJ2GEJ 103 X (10K)	B	15.7/32.7
R225	7030005000	S.RES ERJ2GEJ 471 X (470)	B	8/19.2
R226	7030004980	S.RES ERJ2GEJ 101 X (100)	T	109.7/53.5
R227	7030005090	S.RES ERJ2GEJ 104 X (100K)	B	107.1/49.3
R228	7410001140	S.ARR EXB28V104JX	T	103.3/49
R230	7030005050	S.RES ERJ2GEJ 103 X (10K)	B	124.7/42.7
R232	7030005530	S.RES ERJ2GEJ 100 X (10)	T	120.4/41.1
R233	7410000750	S.ARR EXB-V4V 104JV (100K)	T	130/34.7
R234	7410001130	S.ARR EXB28V102JX	B	129.4/34.4
R236	7030009530	S.RES ERJ2GEJ 270 X (27)	B	63.9/71.5
R237	7030005040	S.RES ERJ2GEJ 472 X (4.7K)	B	65.3/69.7
R238	7030008010	S.RES ERJ2GEJ 123 X (12K)	B	61.9/65.1
R240	7030005570	S.RES ERJ2GEJ 820 X (82)	B	62.4/67.4
R241	7030004980	S.RES ERJ2GEJ 101 X (100)	B	58.5/66
R242	7030004970	S.RES ERJ2GEJ 470 X (47)	T	12/33.1
R243	7030009320	S.RES ERJ2GEJ 4R7 X (4.7)	T	10/36
R244	7030005000	S.RES ERJ2GEJ 471 X (470)	B	15.1/36.3
R245	7030005530	S.RES ERJ2GEJ 100 X (10)	B	11.9/39.9
R246	7030005090	S.RES ERJ2GEJ 104 X (100K)	B	7.5/38.6
R247	7030004990	S.RES ERJ2GEJ 221 X (220)	B	7.7/36.3
R248	7410001130	S.ARR EXB28V102JX	B	103.9/47.9
R249	7410001130	S.ARR EXB28V102JX	B	123.9/27.6
R250	7410001130	S.ARR EXB28V102JX	B	122.1/25.7
R251	7410001140	S.ARR EXB28V104JX	T	124.7/28.7
R252	7410001140	S.ARR EXB28V104JX	T	122.1/25.7
R253	7030005720	S.RES ERJ2GEJ 563 X (56K)	T	9.5/40.5
R254	7030005050	S.RES ERJ2GEJ 103 X (10K)	T	7.4/42.2
R255	7030005310	S.RES ERJ2GEJ 124 X (120K)	B	6.6/38.6
R256	7030006610	S.RES ERJ2GEJ 394 X (390K)	T	13/41
R257	7030005040	S.RES ERJ2GEJ 472 X (4.7K)	T	9/42.2
R258	7030005170	S.RES ERJ2GEJ 474 X (470K)	T	11/44.5
R259	7030005090	S.RES ERJ2GEJ 104 X (100K)	B	6/45.1
R260	7030005090	S.RES ERJ2GEJ 104 X (100K)	B	6/47
R261	7410001130	S.ARR EXB28V102JX	B	99.7/43.5
R262	7410001130	S.ARR EXB28V102JX	T	100.2/37.4
R263	7410001130	S.ARR EXB28V102JX	B	97/40.7
R264	7410001140	S.ARR EXB28V104JX	T	103.8/37
R265	7030005050	S.RES ERJ2GEJ 103 X (10K)	T	103.8/39.2
R266	7410001130	S.ARR EXB28V102JX	B	120.1/23.5
R267	7410001130	S.ARR EXB28V102JX	B	118.3/21.7
R268	7410001130	S.ARR EXB28V102JX	B	116.5/19.9
R269	7030005090	S.RES ERJ2GEJ 104 X (100K)	T	119.4/20.8
R271	7030004980	S.RES ERJ2GEJ 101 X (100)	T	77.6/78.5
R272	7030007280	S.RES ERJ2GEJ 331 X (330)	T	61/76.5
R273	7030005050	S.RES ERJ2GEJ 103 X (10K) [E]	T	62.3/76.1
	7030005050	S.RES ERJ2GEJ 103 X (10K) [C]		
R274	7030004980	S.RES ERJ2GEJ 101 X (100)	T	56.7/69.3
R275	7030005030	S.RES ERJ2GEJ 152 X (1.5K)	T	64.8/73.8
R276	7030007300	S.RES ERJ2GEJ 332 X (3.3K) [A]	T	65.8/73.8
	7030005040	S.RES ERJ2GEJ 472 X (4.7K) [E]		
	7030005040	S.RES ERJ2GEJ 472 X (4.7K) [C]		
R277	7030005050	S.RES ERJ2GEJ 103 X (10K)	B	4.8/45.6
R278	7030005050	S.RES ERJ2GEJ 103 X (10K)	T	132.2/29.9
R279	7030005090	S.RES ERJ2GEJ 104 X (100K)	T	131.3/29.9
R280	7410001130	S.ARR EXB28V102JX	B	95.2/38.9
R281	7030005090	S.RES ERJ2GEJ 104 X (100K)	T	93.7/48.8
R282	7410000750	S.ARR EXB-V4V 104JV (100K)	T	97.2/45.3
R283	7410001130	S.ARR EXB28V102JX	T	103.1/21.7
R284	7030005120	S.RES ERJ2GEJ 102 X (1K)	T	111.2/25.1
R285	7410001130	S.ARR EXB28V102JX	B	107.1/19.9
R286	7410001140	S.ARR EXB28V104JX	T	121.7/22.2
R287	7030005580	S.RES ERJ2GEJ 560 X (56) [A]	T	55.7/72.6
	7030004990	S.RES ERJ2GEJ 221 X (220) [E]		
	7030004990	S.RES ERJ2GEJ 221 X (220) [C]		
R288	7030005100	S.RES ERJ2GEJ 154 X (150K)	T	54.1/68.2
R289	7030005170	S.RES ERJ2GEJ 474 X (470K) [A] only	B	38/63.7
R290	7520000261	S.POS PRF18BB471QB5RB [A] only	T	33.9/63
R291	7030005120	S.RES ERJ2GEJ 102 X (1K)	T	109.2/24.5
R292	7030006070	S.RES ERJ12YJ101U (100)	B	43.6/66.1
R293	7030005120	S.RES ERJ2GEJ 102 X (1K)	T	50.6/70.5
R294	7030005050	S.RES ERJ2GEJ 103 X (10K)	T	51.7/68.2
R295	7030008290	S.RES ERJ2GEJ 183 X (18K)	T	50.6/71.4
R296	7030005040	S.RES ERJ2GEJ 472 X (4.7K)	T	53.8/64.2
R297	7030008010	S.RES ERJ2GEJ 123 X (12K)	T	50.5/68.6
R298	7030005090	S.RES ERJ2GEJ 104 X (100K)	T	45.6/69.9
R300	7030005050	S.RES ERJ2GEJ 103 X (10K)	B	99.9/59.6
R301	7030007290	S.RES ERJ2GEJ 222 X (2.2K)	T	106.2/55.6
R302	7030000480	S.RES MCR10EZHJ 6.8K (682)	T	79/64.4
R303	7030000480	S.RES MCR10EZHJ 6.8K (682)	T	80.9/64.4
R304	7030000440	S.RES MCR10EZHJ 3.3K (332)	T	82.8/64.4
R305	7030005050	S.RES ERJ2GEJ 103 X (10K)	T	40.3/19.4
R306	7030005040	S.RES ERJ2GEJ 472 X (4.7K)	T	41/21.7
R307	7030005050	S.RES ERJ2GEJ 103 X (10K)	B	27/63
R309	7030005070	S.RES ERJ2GEJ 683 X (68K)	T	89.9/7.2
R310	7030004980	S.RES ERJ2GEJ 101 X (100)	B	109.3/62.8
R311	7030000220	S.RES MCR10EZHJ 47 (470)	B	15/76.9
R312	7030005700	S.RES ERJ2GEJ 274 X (270K)	B	31.5/62.4
R313	7030003370	S.RES ERJ3GEYJ 271 V (270)	B	8.6/54

M.=Mounted side (T: Mounted on the Top side, B: Mounted on the Bottom side)
S.=Surface mount

[MAIN UNIT] (Other than "MDC compatible")

REF NO.	PARTS NO.	DESCRIPTION	M.	H/V LOCATION
R314	7030005600	S.RES ERJ2GEJ 273 X (27K)	B	3/53
R315	7030000220	S.RES MCR10EZHJ 47 (470)	B	3.5/57.4
R316	7030005170	S.RES ERJ2GEJ 474 X (470K)	T	90.8/11.3
R317	7030005160	S.RES ERJ2GEJ 105 X (1M)	B	108.3/83.7
R318	7030005160	S.RES ERJ2GEJ 105 X (1M)	B	112.5/82.7
R319	7030005120	S.RES ERJ2GEJ 102 X (1K)	B	112.1/81.5
R320	7030005160	S.RES ERJ2GEJ 105 X (1M)	B	107.2/82.4
R321	7030004970	S.RES ERJ2GEJ 470 X (47)	B	108.4/82
R322	7030005600	S.RES ERJ2GEJ 273 X (27K)	B	2.1/79.2
R323	7030003370	S.RES ERJ3GEYJ 271 V (270)	B	6.3/78.7
R324	7030000620	S.RES MCR10EZHJ 100 K (104)	B	5.6/85.5
R325	7030005050	S.RES ERJ2GEJ 103 X (10K)	B	130.5/45.2
R326	7030005090	S.RES ERJ2GEJ 104 X (100K)	B	131.8/51.7
R327	7030007290	S.RES ERJ2GEJ 222 X (2.2K)	B	131.1/54.2
R328	7030005090	S.RES ERJ2GEJ 104 X (100K)	B	134.2/51.7
R332	7030005090	S.RES ERJ2GEJ 104 X (100K)	T	109.6/27.9
R333	7030005120	S.RES ERJ2GEJ 102 X (1K)	T	109.6/26.9
R334	7030000100	S.RES MCR10EZHJ 4.7 (4R7)	T	101.4/79.7
R335	7030005050	S.RES ERJ2GEJ 103 X (10K)	T	101.8/83.9
R336	7030005120	S.RES ERJ2GEJ 102 X (1K)	T	111.3/78.5
R337	7410001130	S.ARR EXB28V102JX	T	104.6/75.9
R338	7030005651	S.RES ERA3YKD 304V (300K)	T	113.6/54.3
R339	7030005871	S.RES ERA3YKD 104V (100K)	T	113.6/52.9
R340	7030003560	S.RES ERJ3GEYJ 103 V (10K)	T	136.3/65.7
R341	7030003560	S.RES ERJ3GEYJ 103 V (10K)	B	130.7/85.9
R342	7030005090	S.RES ERJ2GEJ 104 X (100K)	B	135.4/52.2
R343	7030007290	S.RES ERJ2GEJ 222 X (2.2K)	B	138.2/49.4
R344	7030005110	S.RES ERJ2GEJ 224 X (220K)	B	133.3/54.6
R345	7030005110	S.RES ERJ2GEJ 224 X (220K)	B	133.3/56.3
R346	7030008410	S.RES ERJ2GEJ 392 X (3.9K)	B	137/52.2
R347	7030005050	S.RES ERJ2GEJ 103 X (10K)	B	137.8/53.7
R348	7030005700	S.RES ERJ2GEJ 274 X (270K)	B	129.1/77.2
R349	7030005090	S.RES ERJ2GEJ 104 X (100K)	B	127.8/77.7
R350	7030005120	S.RES ERJ2GEJ 102 X (1K)	B	139.1/47.8
R351	7030004980	S.RES ERJ2GEJ 101 X (100)	B	136.3/38.1
R352	7030008300	S.RES ERJ2GEJ 184 X (180K)	B	139.7/39
R353	7030005230	S.RES ERJ2GEJ 334 X (330K)	B	138.2/47.8
R354	7030010040	S.RES ERJ2GEJ-JPW	T	140.4/36
R355	7030008280	S.RES ERJ2GEJ 271 X (270)	B	139.7/34.3
R356	7540000290	ABS ERZV10D220		
R359	7030005090	S.RES ERJ2GEJ 104 X (100K)	B	114.8/82.9
R360	7030005090	S.RES ERJ2GEJ 104 X (100K)	T	80.6/5.3
R361	7030005600	S.RES ERJ2GEJ 273 X (27K)	T	78.4/5.3
R362	7030005050	S.RES ERJ2GEJ 103 X (10K)	T	124.8/50.2
R363	7030005120	S.RES ERJ2GEJ 102 X (1K)	T	42.9/38.3
R364	7030009140	S.RES ERJ2GEJ 272 X (2.7K)	T	42.9/37.4
R365	7030004970	S.RES ERJ2GEJ 470 X (47)	T	38.3/37.9
R366	7030005050	S.RES ERJ2GEJ 103 X (10K)	B	131.4/63.4
R367	7030005000	S.RES ERJ2GEJ 471 X (470)	B	130.1/63
R368	7030005050	S.RES ERJ2GEJ 103 X (10K)	T	78.3/7.6
R370	7030005010	S.RES ERJ2GEJ 681 X (680)	T	71.2/70.4
R371	7030005050	S.RES ERJ2GEJ 103 X (10K)	T	119.5/84.6
R372	7030005040	S.RES ERJ2GEJ 472 X (4.7K)	T	25.9/8.1
R373	7030005040	S.RES ERJ2GEJ 472 X (4.7K)	T	74/21.6
R375	7030005030	S.RES ERJ2GEJ 152 X (1.5K)	T	27.6/5.3
R376	7030005160	S.RES ERJ2GEJ 105 X (1M)	B	109.1/12.1
R377	7030005160	S.RES ERJ2GEJ 105 X (1M)	B	110.9/12.1
R378	7410001140	S.ARR EXB28V104JX	B	100.7/18.3
R379	7030005090	S.RES ERJ2GEJ 104 X (100K)	T	111.6/23.8
R386	7030005120	S.RES ERJ2GEJ 102 X (1K)	T	105.8/85.1
R387	7030005120	S.RES ERJ2GEJ 102 X (1K)	T	107.8/85.1
R389	7030005090	S.RES ERJ2GEJ 104 X (100K)	T	110.4/10.7
R390	7030005120	S.RES ERJ2GEJ 102 X (1K)	B	79.8/46.1
R391	7030005120	S.RES ERJ2GEJ 102 X (1K)	T	79.3/41.3
C1	4030017420	S.CER C1005 CH 1H 470J-T	T	88.9/54.3
C2	4030017420	S.CER C1005 CH 1H 470J-T	T	89.9/54.3
C3	4030017420	S.CER C1005 CH 1H 470J-T	T	41.5/15.4
C4	4030017420	S.CER C1005 CH 1H 470J-T	B	50/15
C5	4030017460	S.CER C1005 JB 1H 102K-T	T	89.4/34
C6	4550007080	S.TAN TEESVA 1C 106M8R	T	80.8/55.1
C7	4030017420	S.CER C1005 CH 1H 470J-T	T	84/18.4
C8	4030017420	S.CER C1005 CH 1H 470J-T	T	89.9/52
C9	4030016930	S.CER C1005 JB 1A 104K-T	T	88.9/52
C10	4030016930	S.CER C1005 JB 1A 104K-T	T	80.6/50.7
C11	4030016930	S.CER C1005 JB 1A 104K-T	T	10.9/18.8
C12	4030016930	S.CER C1005 JB 1A 104K-T	T	8.5/7.4
C13	4030016930	S.CER C1005 JB 1A 104K-T	T	85.6/10
C14	4030016930	S.CER C1005 JB 1A 104K-T	T	86.6/10
C15	4030017460	S.CER C1005 JB 1H 102K-T	T	41.5/7.7
C16	4550000460	S.TAN TEESVA 1C 105M8R	T	42.7/6.2
C17	4550000460	S.TAN TEESVA 1C 105M8R	B	42.7/6.2
C18	4030017420	S.CER C1005 CH 1H 470J-T	T	41.5/14.5
C19	4030017420	S.CER C1005 CH 1H 470J-T	B	50/15.9
C20	4030016970	S.CER C1005 JB 1E 223K-T	B	100.9/52.3
C21	4030017420	S.CER C1005 CH 1H 470J-T	T	41.5/13.5
C22	4030017420	S.CER C1005 CH 1H 470J-T	T	41.5/12.6
C23	4030016930	S.CER C1005 JB 1A 104K-T	T	51.8/5.6
C24	4030017420	S.CER C1005 CH 1H 470J-T	B	39.8/9.8
C25	4030017420	S.CER C1005 CH 1H 470J-T	T	61.4/6
C26	4030016930	S.CER C1005 JB 1A 104K-T	B	37.2/5.8
C27	4030017760	S.CER C1005 JB 1H 222K-T	B	36.3/7.5
C28	4030016790	S.CER C1005 JB 1E 103K-T	T	79.3/7.6
C29	4030017460	S.CER C1005 JB 1H 102K-T	T	79/13.6
C30	4030016930	S.CER C1005 JB 1A 104K-T	T	78.1/13.6
C31	4030017460	S.CER C1005 JB 1H 102K-T	T	80.6/51.7
C32	4030017500	S.CER C1005 CH 1H 560J-T	B	33.3/15.9
C33	4030016930	S.CER C1005 JB 1A 104K-T	B	34.8/12.8
C34	4030017570	S.CER C1005 CH 1H 040B-T	B	32.1/15.4
C35	4030017590	S.CER C1005 CH 1H 070C-T	B	30.9/15.9
C36	4030016930	S.CER C1005 JB 1A 104K-T	T	22.4/14.9
C37	4030017360	S.CER C1005 CH 1H 030B-T	B	28.3/15.4
C38	4030016930	S.CER C1005 JB 1A 104K-T	T	22/6.2
C39	4030016930	S.CER C1005 JB 1A 104K-T	B	13.6/6.2

[MAIN UNIT] (Other than "MDC compatible")

REF NO.	PARTS NO.	DESCRIPTION	M.	H/V LOCATION
C40	4030016930	S.CER C1005 JB 1A 104K-T	T	23.8/6.2
C41	4030016930	S.CER C1005 JB 1A 104K-T	T	22/12.5
C42	4030016930	S.CER C1005 JB 1A 104K-T	T	23/12.5
C43	4030017430	S.CER C1005 CH 1H 101J-T	T	26.4/9.4
C44	4030017430	S.CER C1005 CH 1H 101J-T	T	25.5/9.4
C45	4030017790	S.CER C1005 JB 1H 682K-T	B	91.7/10
C46	4030016930	S.CER C1005 JB 1A 104K-T	B	93.8/10
C47	4030016970	S.CER C1005 JB 1E 223K-T	T	92.1/15.1
C48	4030017710	S.CER C1005 CH 1H 181J-T	B	49.7/9.1
C49	4550007080	S.TAN TEESVA 1C 106M8R	T	52.1/15.4
C50	4030017460	S.CER C1005 JB 1H 102K-T	T	54.3/12
C51	4030017400	S.CER C1005 CH 1H 220J-T	T	47.8/19
C52	4030017400	S.CER C1005 CH 1H 220J-T	T	44.7/7.8
C53	4030017900	S.CER C1005 JB 1E 123K-T	T	59.1/10.6
C54	4030018080	S.CER C1005 JB 1H 182K-T	T	59.1/11.5
C55	4030016790	S.CER C1005 JB 1E 103K-T	T	64.5/57
C56	4030017620	S.CER C1005 CH 1H 100C-T	T	87.7/35.5
C57	4030016930	S.CER C1005 JB 1A 104K-T	T	80.1/36.7
C58	4030017430	S.CER C1005 CH 1H 101J-T	T	85.2/38.6
C59	4030017460	S.CER C1005 JB 1H 102K-T	T	81.8/24.3
C60	4030017420	S.CER C1005 CH 1H 470J-T	T	82.9/41.5
C63	4030017620	S.CER C1005 CH 1H 100C-T	T	84/39.1
C64	4030017780	S.CER C1005 JB 1H 472K-T	T	81.3/41.3
C65	4030017460	S.CER C1005 JB 1H 102K-T	T	27.6/10.6
C66	4550006050	S.TAN TEESVA 0J 106M8R	T	31.1/6.8
C67	4030017460	S.CER C1005 JB 1H 102K-T	T	27.6/7.1
C68	4030017460	S.CER C1005 JB 1H 102K-T	T	30.5/9
C69	4030017460	S.CER C1005 JB 1H 102K-T	T	32.6/15.4
C70	4030017420	S.CER C1005 CH 1H 470J-T	B	28.3/13.4
C71	4030016940	S.CER C1005 JB 1A 393K-T	B	91.7/8.3
C72	4030018860	S.CER C1005 JB 0J 105K-T	B	50.7/11
C73	4030017750	S.CER C1005 JB 1H 122K-T	B	51.3/16.6
C74	4030016930	S.CER C1005 JB 1A 104K-T	B	52.3/16.6
C75	4030016930	S.CER C1005 JB 1A 104K-T	B	56.2/12.6
C77	4030017460	S.CER C1005 JB 1H 102K-T	B	54.2/16.6
C78	4030017460	S.CER C1005 JB 1H 102K-T	B	53.7/9
C79	4550007080	S.TAN TEESVA 1C 106M8R	T	66.5/55.3
C80	4030017780	S.CER C1005 JB 1H 472K-T	B	79.2/35
C81	4550000460	S.TAN TEESVA 1C 105M8R	B	82.2/36.4
C82	4030017460	S.CER C1005 JB 1H 102K-T	B	84.1/26.9
C83	4550000460	S.TAN TEESVA 1C 105M8R	B	84/32.5
C84	4030017460	S.CER C1005 JB 1H 102K-T	T	78.2/48.8
C85	4030017380	S.CER C1005 CH 1H 050B-T	B	77.1/47.2
C86	4030017350	S.CER C1005 CH 1H 020B-T	B	74.8/48.3
C87	4030017580	S.CER C1005 CH 1H 060C-T	B	73.7/48.3
C88	4030017380	S.CER C1005 CH 1H 050B-T	B	72.4/48.6
C89	4030017580	S.CER C1005 CH 1H 060C-T	B	71.1/49.1
C90	4030017350	S.CER C1005 CH 1H 020B-T	B	70/49.1
C91	4030016790	S.CER C1005 JB 1E 103K-T	T	27.3/17.3
C92	4030017460	S.CER C1005 JB 1H 102K-T	T	25.2/22.4
C93	4030017680	S.CER C1005 CH 1H 820J-T	T	32.6/12.6
C94	4030017460	S.CER C1005 JB 1H 102K-T	B	27.8/12.5
C95	4030016790	S.CER C1005 JB 1E 103K-T	T	28.9/20.1
C96	4030016930	S.CER C1005 JB 1A 104K-T	B	32.8/8.1
C97	4030016930	S.CER C1005 JB 1A 104K-T	B	29.6/9
C98	4030016930	S.CER C1005 JB 1A 104K-T	B	89.3/7.3
C99	4030016930	S.CER C1005 JB 1A 104K-T	B	90.7/14.8
C100	4030016930	S.CER C1005 JB 1A 104K-T	T	87.3/14.3
C101	4030017710	S.CER C1005 CH 1H 181J-T	T	83.9/7.2
C102	4030016930	S.CER C1005 JB 1A 104K-T	T	108/32.8
C103	4030016930	S.CER C1005 JB 1A 104K-T	B	55.3/19.3
C104	4550003250	S.TAN TEESVA 1V 474M8R	B	67.2/24.2
C105	4030017420	S.CER C1005 CH 1H 470J-T	T	49.2/29.4
C106	4030017460	S.CER C1005 JB 1H 102K-T	B	78/29.1
C107	4030016930	S.CER C1005 JB 1A 104K-T	B	54.2/28.8
C109	4550006480	S.TAN TEESVA 1C 475M8R	B	56.1/27.7
C110	4030017420	S.CER C1005 CH 1H 470J-T	T	60.1/27
C111	4030016930	S.CER C1005 JB 1A 104K-T	B	66.3/30.3
C112	4030017460	S.CER C1005 JB 1H 102K-T	B	67.4/30.3
C113	4030017420	S.CER C1005 CH 1H 470J-T	T	72.1/26.6
C114	4030016790	S.CER C1005 JB 1E 103K-T	T	24.3/22.4
C115	4030016790	S.CER C1005 JB 1E 103K-T	T	23/21.2
C116	4030016790	S.CER C1005 JB 1E 103K-T	T	28.5/22.6
C118	4030017640	S.CER C1005 CH 1H 150J-T	T	20.5/28.7
C120	4030016790	S.CER C1005 JB 1E 103K-T	T	32.6/22.5
C121	4030017570	S.CER C1005 CH 1H 040B-T	T	34.8/23.5
C122	4030017390	S.CER C1005 CH 1H 180J-T	T	39.8/28.9
C124	4030016930	S.CER C1005 JB 1A 104K-T	B	90.3/18.9
C125	4030017460	S.CER C1005 JB 1H 102K-T	B	128.5/52.6
C126	4030016930	S.CER C1005 JB 1A 104K-T	T	79.6/20.6
C127	4030016930	S.CER C1005 JB 1A 104K-T	B	82.8/20.1
C128	4030016930	S.CER C1005 JB 1A 104K-T	T	78.4/19.3
C129	4030016930	S.CER C1005 JB 1A 104K-T	B	63.7/16.4
C130	4030016930	S.CER C1005 JB 1A 104K-T	B	135.6/25.4
C131	4030017660	S.CER C1005 CH 1H 330J-T	T	135.9/25.7
C132	4030017660	S.CER C1005 CH 1H 330J-T	T	135.9/18
C133	4030018010	S.CER C1005 CH 1H 360J-T	T	48.1/35.5
C134	4030017640	S.CER C1005 CH 1H 150J-T	T	49.4/34.8
C135	4030017660	S.CER C1005 CH 1H 330J-T	T	64.1/32.5
C136	4030017340	S.CER C1005 CH 1H 010B-T	T	71.1/30.8
C137	4030017570	S.CER C1005 CH 1H 040B-T	T	71.1/29.9
C138	4030017730	S.CER C1005 JB 1H 471K-T	T	71.9/33
C139	4030017390	S.CER C1005 CH 1H 180J-T	T	62.1/32
C140	4030017360	S.CER C1005 CH 1H 030B-T	T	72.5/30.7
C141	4030017360	S.CER C1005 CH 1H 030B-T	T	72.1/29
C142	4030018860	S.CER C1005 JB 0J 105K-T	T	89.5/12.7
C143	4030017400	S.CER C1005 CH 1H 220J-T	T	71.3/36.6
C145	4030016790	S.CER C1005 JB 1E 103K-T	T	31.4/35.2
C147	4030016790	S.CER C1005 JB 1E 103K-T	T	34.5/35.2
C148	4030016790	S.CER C1005 JB 1E 103K-T	T	30.9/26.4
C149	4030016930	S.CER C1005 JB 1A 104K-T	B	78.2/17.4
C150	4030018560	S.CER C2012 JB 1A 475K-T	B	86.9/19.8
C151	4030016930	S.CER C1005 JB 1A 104K-T	T	112.1/46
C152	4030016930	S.CER C1005 JB 1A 104K-T	T	109.6/34.3
C153	4030017460	S.CER C1005 JB 1H 102K-T	T	111.4/34.3

M.=Mounted side (T: Mounted on the Top side, B: Mounted on the Bottom side)
S.=Surface mount

[MAIN UNIT] (Other than "MDC compatible")

REF NO.	PARTS NO.	DESCRIPTION	M.	H/V LOCATION
C154	4030018860	S.CER C1005 JB 0J 105K-T	T	82.7/19.8
C155	4030017420	S.CER C1005 CH 1H 470J-T	T	110.3/38.7
C156	4030017910	S.CER C1005 JB 1H 152K-T	T	104.9/42.3
C157	4030017420	S.CER C1005 CH 1H 470J-T	T	110.8/48.6
C158	4030017430	S.CER C1005 CH 1H 101J-T	T	110.3/37.8
C159	4030017460	S.CER C1005 JB 1H 102K-T	T	120.3/5.5
C160	4030017460	S.CER C1005 JB 1H 102K-T	B	130.6/25.4
C161	4030018010	S.CER C1005 CH 1H 360J-T	T	50.8/43.8
C162	4030017590	S.CER C1005 CH 1H 070C-T	T	52.1/43.4
C163	4030017660	S.CER C1005 CH 1H 330J-T	T	58.7/39.4
C164	4030017660	S.CER C1005 CH 1H 330J-T	T	48.6/45.8
C165	4030017660	S.CER C1005 CH 1H 330J-T	T	49.9/45.4
C166	4030017580	S.CER C1005 CH 1H 060C-T	T	60.1/38.9
C167	4030017420	S.CER C1005 CH 1H 470J-T	T	70/38.9
C168	4030017660	S.CER C1005 CH 1H 330J-T	T	59.1/40.8
C169	4030017660	S.CER C1005 CH 1H 330J-T	T	60.7/40.4
C170	4030017550	S.CER C1005 CH 1H 1R5B-T	T	70.4/36.6
C171	4030017570	S.CER C1005 CH 1H 040B-T	T	70/37.9
C172	4030017400	S.CER C1005 CH 1H 220J-T	T	70/42.9
C173	4030017400	S.CER C1005 CH 1H 220J-T	T	70/43.9
C174	4030017640	S.CER C1005 CH 1H 150J-T	T	38.3/38.8
C175	4030016790	S.CER C1005 JB 1E 103K-T	B	41.4/39.4
C176	4030016930	S.CER C1005 JB 1A 104K-T	B	41/33.2
C177	4030017730	S.CER C1005 JB 1H 471K-T	B	41/32.2
C178	4030016790	S.CER C1005 JB 1E 103K-T	B	34.5/33
C180	4030017740	S.CER C1005 JB 1H 821K-T	T	109.2/48.6
C181	4030016930	S.CER C1005 JB 1A 104K-T	T	112.1/43.2
C182	4030016780	S.CER C1005 JB 1E 153K-T	T	112.1/39.6
C183	4030017420	S.CER C1005 CH 1H 470J-T	T	104.9/45
C184	4030017760	S.CER C1005 JB 1H 222K-T	T	104.9/45.9
C185	4030017690	S.CER C1005 CH 1H 121J-T	T	107.8/48.6
C186	4030016790	S.CER C1005 JB 1E 103K-T	T	51.7/45.4
C187	4030017460	S.CER C1005 JB 1H 102K-T	T	52.6/45.4
C188	4030016790	S.CER C1005 JB 1E 103K-T	T	62.7/40.4
C189	4030017460	S.CER C1005 JB 1H 102K-T	T	63.7/40.4
C190	4030017540	S.CER C1005 CH 1H R75B-T	T	55/48.3
C191	4030016790	S.CER C1005 JB 1E 103K-T	T	70/40.9
C192	4030017540	S.CER C1005 CH 1H R75B-T	T	57.7/43
C193	4030017460	S.CER C1005 JB 1H 102K-T	T	70/39.9
C194	4030017530	S.CER C1005 CH 1H 0R5B-T	T	60/44.4
C195	4030016930	S.CER C1005 JB 1A 104K-T	B	39/30
C196	4030017730	S.CER C1005 JB 1H 471K-T	B	38.1/33.2
C197	4030016930	S.CER C1005 JB 1A 104K-T	B	38.1/32.2
C198	4030017730	S.CER C1005 JB 1H 471K-T	B	31.3/38.3
C199	4030016930	S.CER C1005 JB 1A 104K-T	B	31.3/39.2
C200	4030016930	S.CER C1005 JB 1A 104K-T	B	31.3/34
C201	4030017730	S.CER C1005 JB 1H 471K-T	B	31.3/33.1
C202	4030017460	S.CER C1005 JB 1H 102K-T	T	112.1/38.7
C203	4030017460	S.CER C1005 JB 1H 102K-T	B	100.9/47
C205	4030018900	S.CER C1005 JB 0J 474K-T	T	78.4/18.4
C206	4030016930	S.CER C1005 JB 1A 104K-T	T	78.5/16.7
C207	4030017730	S.CER C1005 JB 1H 471K-T	T	61/45.7
C208	4030017460	S.CER C1005 JB 1H 102K-T	T	60/45.7
C209	4030017460	S.CER C1005 JB 1H 102K-T	B	65/52.7
C210	4030017590	S.CER C1005 CH 1H 070C-T	B	57.6/50.3
C211	4030017620	S.CER C1005 CH 1H 100C-T	B	60/51.4
C212	4030017460	S.CER C1005 JB 1H 102K-T	B	63.8/50.8
C214	4030017460	S.CER C1005 JB 1H 102K-T	B	66.8/41.3
C215	4030017390	S.CER C1005 CH 1H 180J-T	B	38.5/47.6
C216	4030017660	S.CER C1005 CH 1H 330J-T	B	43.1/47.6
C217	4030017730	S.CER C1005 JB 1H 471K-T	B	25/32.7
C218	4030016930	S.CER C1005 JB 1A 104K-T	B	25/31.7
C219	4030017650	S.CER C1005 CH 1H 270J-T	B	23/36.3
C220	4030017600	S.CER C1005 CH 1H 080C-T	B	23/38
C221	4030016930	S.CER C1005 JB 1A 104K-T	B	5.6/23.2
C222	4030017030	S.CER C1005 JB 1A 273K-T	B	128.6/45.3
C223	4030016930	S.CER C1005 JB 1A 104K-T	B	126.3/48.2
C224	4030017640	S.CER C1005 CH 1H 150J-T	T	124.2/40.1
C225	4030016790	S.CER C1005 JB 1E 103K-T	T	124.2/37.4
C226	4030017580	S.CER C1005 CH 1H 060C-T	T	124.2/41.1
C227	4030017460	S.CER C1005 JB 1H 102K-T	B	57.6/53.5
C228	4030017460	S.CER C1005 JB 1H 102K-T	B	56.4/53.1
C229	4030017620	S.CER C1005 CH 1H 100C-T	B	52.1/53.1
C230	4030017460	S.CER C1005 JB 1H 102K-T	B	63.5/62.3
C231	4030017360	S.CER C1005 CH 1H 030B-T	B	66.3/52.2
C232	4030017460	S.CER C1005 JB 1H 102K-T	B	68.6/49.5
C235	4030017460	S.CER C1005 JB 1H 102K-T	B	44.4/50.7
C236	4030017390	S.CER C1005 CH 1H 180J-T	B	47.8/48.1
C237	4030017620	S.CER C1005 CH 1H 100C-T	B	47.4/49.4
C240	4030017460	S.CER C1005 JB 1H 102K-T	B	18.9/34.4
C241	4030017360	S.CER C1005 CH 1H 030B-T	B	17/37.7
C242	4030017460	S.CER C1005 JB 1H 102K-T	B	15/34.4
C243	4030017460	S.CER C1005 JB 1H 102K-T	B	18.9/33.5
C244	4030017460	S.CER C1005 JB 1H 102K-T	B	15.7/31.7
C245	4550006780	S.TAN TEESVB2 0J 476M8R	B	5.6/18.7
C246	4030016930	S.CER C1005 JB 1A 104K-T	B	105.1/52.2
C247	4030016930	S.CER C1005 JB 1A 104K-T	B	107/52.9
C248	4030016930	S.CER C1005 JB 1A 104K-T	B	108.1/52
C249	4030018900	S.CER C1005 JB 0J 474K-T	B	121.8/47.4
C250	4030017630	S.CER C1005 CH 1H 120J-T	T	120.4/40.1
C251	4030017400	S.CER C1005 CH 1H 220J-T	B	61.9/64.2
C252	4030017420	S.CER C1005 CH 1H 470J-T	B	62.6/71.1
C253	4030017730	S.CER C1005 JB 1H 471K-T	B	61.6/71.1
C254	4030017420	S.CER C1005 CH 1H 470J-T	B	63.9/69.5
C256	4030017460	S.CER C1005 JB 1H 102K-T	B	59.7/65.5
C257	4030017460	S.CER C1005 JB 1H 102K-T	B	63.4/67.4
C258	4030017460	S.CER C1005 JB 1H 102K-T	T	13.9/32.5
C259	4030017460	S.CER C1005 JB 1H 102K-T	T	10/35
C260	4030017590	S.CER C1005 CH 1H 070C-T	B	14.2/36.3
C261	4030017460	S.CER C1005 JB 1H 102K-T	B	9.5/33.9
C262	4030017460	S.CER C1005 JB 1H 102K-T	B	13.7/37.7
C263	4030017490	S.CER C1608 JB 1A 105K-T	T	14.1/33.7
C264	4030017350	S.CER C1005 CH 1H 020B-T	B	8.4/38.6
C265	4030017420	S.CER C1005 CH 1H 470J-T	B	8.6/36.3
C266	4030017460	S.CER C1005 JB 1H 102K-T	B	9.5/36.3

[MAIN UNIT] (Other than "MDC compatible")

REF NO.	PARTS NO.	DESCRIPTION	M.	H/V LOCATION
C267	4030017460	S.CER C1005 JB 1H 102K-T	B	63.9/70.5
C268	4030017640	S.CER C1005 CH 1H 150J-T	B	68.2/69.1
C269	4030017390	S.CER C1005 CH 1H 180J-T [A]	B	69.7/69.1
	4030017650	S.CER C1005 CH 1H 270J-T [E]		
	4030017650	S.CER C1005 CH 1H 270J-T [C]		
C270	4030017390	S.CER C1005 CH 1H 180J-T	B	71.2/69
C271	4030017400	S.CER C1005 CH 1H 220J-T [A]	T	74.3/71.7
	4030017390	S.CER C1005 CH 1H 180J-T [E]		
	4030017390	S.CER C1005 CH 1H 180J-T [C]		
C272	4030016930	S.CER C1005 JB 1A 104K-T	T	7.9/39.5
C273	4030016930	S.CER C1005 JB 1A 104K-T	T	9.5/39.5
C274	4030017460	S.CER C1005 JB 1H 102K-T	T	7.4/41.2
C275	4030016930	S.CER C1005 JB 1A 104K-T	T	15/41
C276	4030017620	S.CER C1005 CH 1H 100C-T	B	10.5/41
C277	4030017460	S.CER C1005 JB 1H 102K-T	T	14/41
C278	4030017350	S.CER C1005 CH 1H 020B-T	B	8.9/43.6
C279	4030017460	S.CER C1005 JB 1H 102K-T	B	6.9/44.2
C280	4030017550	S.CER C1005 CH 1H 1R5B-T	B	9.4/46.1
C281	4030017420	S.CER C1005 CH 1H 470J-T	T	97.9/34.2
C282	4030017420	S.CER C1005 CH 1H 470J-T	T	102.1/40
C283	4030017420	S.CER C1005 CH 1H 470J-T	B	97.4/44.6
C284	4030017420	S.CER C1005 CH 1H 470J-T	T	94.8/35.5
C285	4030017420	S.CER C1005 CH 1H 470J-T	B	94.2/44.4
C286	4030017420	S.CER C1005 CH 1H 470J-T	T	92.1/43.3
C287	4030017420	S.CER C1005 CH 1H 470J-T	T	92.1/41.6
C288	4030017460	S.CER C1005 JB 1H 102K-T	B	4.8/46.5
C290	4030017400	S.CER C1005 CH 1H 220J-T	T	74.3/73.6
C291	4030017730	S.CER C1005 JB 1H 471K-T	T	69.3/76.1
C292	4550000560	S.TAN TEESVA 1V 334M8R	T	67.6/74.4
C294	4030017420	S.CER C1005 CH 1H 470J-T	T	70.4/76.1
C295	4030017420	S.CER C1005 CH 1H 470J-T	T	56.7/67.3
C296	4510008530	S.ELE EEE1HA2R2SR	T	59.6/80
C297	4030017460	S.CER C1005 JB 1H 102K-T	T	56.7/68.3
C299	4030017460	S.CER C1005 JB 1H 102K-T	B	6.9/47.9
C300	4030017340	S.CER C1005 CH 1H 010B-T	B	8.9/48.5
C301	4030017580	S.CER C1005 CH 1H 060C-T	B	13.2/49.5
C302	4030017460	S.CER C1005 JB 1H 102K-T	B	4.4/44.4
C303	4030016930	S.CER C1005 JB 1A 104K-T	B	129.6/32
C304	4030017420	S.CER C1005 CH 1H 470J-T	B	90/43.4
C305	4030011140	S.CER GRM31M2C2H120JV01L (GRM42-6 CH)	T	27.6/78.7
C306	4030011120	S.CER GRM31M2C2H100JV01L (GRM42-6 CH)	T	27.6/76.1
C307	4030011120	S.CER GRM31M2C2H100JV01L (GRM42-6 CH)	T	27.7/71.8
C308	4030011070	S.CER GRM31M2C2H5R0CY21L (GRM42-6 CH) [A]	T	27.7/69.2
	4030011140	S.CER GRM31M2C2H120JV01L (GRM42-6 CH) [E]		
	4030011140	S.CER GRM31M2C2H120JV01L (GRM42-6 CH) [C]		
C309	4030017460	S.CER C1005 JB 1H 102K-T	T	71.5/76.1
C310	4030017420	S.CER C1005 CH 1H 470J-T	T	43/76.1
C311	4030017460	S.CER C1005 JB 1H 102K-T	T	44.1/76.1
C312	4030017730	S.CER C1005 JB 1H 471K-T	T	45.3/76.1
C313	4510008680	S.ELE EEE1EA220SP	T	51.7/77.7
C314	4030017730	S.CER C1005 JB 1H 471K-T	B	40.2/68.3
C315	4030017460	S.CER C1005 JB 1H 102K-T	T	55.7/73.6
C316	4030016790	S.CER C1005 JB 1E 103K-T	T	54.1/72.6
C317	4030011600	S.CER C1608 JB 1E 104K-T	T	54.1/67
C318	4030017460	S.CER C1005 JB 1H 102K-T [A] only	T	35.1/63.3
C319	4030017460	S.CER C1005 JB 1H 102K-T [A] only	T	47.3/67.4
C320	4030017580	S.CER C1005 CH 1H 060C-T	B	15/52.7
C321	4030017460	S.CER C1005 JB 1H 102K-T	B	14.9/49.5
C322	4030017600	S.CER C1005 CH 1H 080C-T	B	19.3/52
C323	4030017570	S.CER C1005 CH 1H 040B-T	B	20/49.6
C324	4030017420	S.CER C1005 CH 1H 470J-T	B	90/41.8
C325	4030017460	S.CER C1005 JB 1H 102K-T	T	72.5/64.9
C326	4030017420	S.CER C1005 CH 1H 470J-T	B	46.2/64.3
C327	4030017460	S.CER C1005 JB 1H 102K-T	B	84.2/79
C328	4030017460	S.CER C1005 JB 1H 102K-T	B	83.2/79
C329	4030017460	S.CER C1005 JB 1H 102K-T	B	82.1/79
C330	4030017460	S.CER C1005 JB 1H 102K-T	B	81/79
C331	4030017460	S.CER C1005 JB 1H 102K-T	B	80/79
C332	4030016930	S.CER C1005 JB 1A 104K-T	T	51.9/71.9
C334	4030017460	S.CER C1005 JB 1H 102K-T	T	49.5/68.6
C335	4030017460	S.CER C1005 JB 1H 102K-T	T	53.8/63.2
C336	4030017580	S.CER C1005 CH 1H 060C-T	B	20.8/52
C337	4030017390	S.CER C1005 CH 1H 180J-T	B	25.1/51.2
C338	4510008600	S.ELE EEE1CA4R7NR	T	79.1/69.1
C339	4030017460	S.CER C1005 JB 1H 102K-T	T	79.1/62.1
C340	4030017460	S.CER C1005 JB 1H 102K-T	T	37.5/20.8
C341	4030016790	S.CER C1005 JB 1E 103K-T	T	41.9/19.4
C342	4030017200	S.CER GRM31BR32J102KY01L	T	25.3/62.5
C343	4030011270	S.CER GRM31M2C2H200JV01L (GRM42-6 CH)	T	22.1/63.9
C345	4030011170	S.CER GRM31M2C2H180JV01L (GRM42-6 CH)	T	17.3/57.4
C346	4030011170	S.CER GRM31M2C2H180JV01L (GRM42-6 CH)	T	30.2/62.8
C347	4030017520	S.CER C1005 CH 1H 0R3B-T	B	25.4/63
C348	4030017460	S.CER C1005 JB 1H 102K-T	B	31.5/63.4
C349	4030016930	S.CER C1005 JB 1A 104K-T	T	100.5/63.5
C350	4550005980	S.TAN TEESVA 1A 475M8R	T	101.6/62
C351	4030018860	S.CER C1005 JB 0J 105K-T	T	110.6/67.4
C352	4030017460	S.CER C1005 JB 1H 102K-T	B	124.6/59.6
C353	4550005980	S.TAN TEESVA 1A 475M8R	B	124.5/61.3
C354	4550006250	S.TAN TEESVA 1A 106M8R	B	112.9/61.7
C355	4030017420	S.CER C1005 CH 1H 470J-T	B	112.6/60.1
C356	4030011270	S.CER GRM31M2C2H200JV01L (GRM42-6 CH)	T	14.7/62.9
C357	4030011270	S.CER GRM31M2C2H200JV01L (GRM42-6 CH)	T	10.4/62.9
C358	4030007030	S.CER C1608 CH 1H 150J-T	B	10.6/56.4
C359	4030011340	S.CER C1608 CH 1H 471J-T	B	9.4/56.4

M.=Mounted side (T: Mounted on the Top side, B: Mounted on the Bottom side)
S.=Surface mount

[MAIN UNIT] (Other than "MDC compatible")

REF NO.	PARTS NO.	DESCRIPTION	M.	H/V LOCATION
C360	4030017460	S.CER C1005 JB 1H 102K-T	B	4/53
C361	4030017460	S.CER C1005 JB 1H 102K-T	T	103.9/53.5
C362	4030017460	S.CER C1005 JB 1H 102K-T	T	108.2/24.5
C363	4510008540	S.ELE EEE1CA100SR	T	139.1/31.9
C365	4550007650	S.TAN F931V105MAABMA	B	106.7/65
C366	4550007650	S.TAN F931V105MAABMA	B	104.2/65
C367	4550007650	S.TAN F931V105MAABMA	B	101.6/65
C368	4550007650	S.TAN F931V105MAABMA	B	99.5/64.6
C369	4030011270	S.CER GRM31M2C2H200JV01L (GRM42-6 CH)	T	15.8/78.9
C370	4030011270	S.CER GRM31M2C2H200JV01L (GRM42-6 CH)	T	15.8/83.1
C371	4030017460	S.CER C1005 JB 1H 102K-T	B	4.1/81.6
C372	4030006850	S.CER C1608 JB 1H 471K-T	B	8.3/77.1
C373	4030016930	S.CER C1005 JB 1A 104K-T	B	130.9/51.7
C374	4030016930	S.CER C1005 JB 1A 104K-T	B	133/51.3
C375	4030016930	S.CER C1005 JB 1A 104K-T	B	132.4/54.6
C377	4030017460	S.CER C1005 JB 1H 102K-T	T	105.9/51.9
C378	4030017460	S.CER C1005 JB 1H 102K-T	T	108.2/78
C379	4030016930	S.CER C1005 JB 1A 104K-T	B	108.4/80.3
C380	4030017460	S.CER C1005 JB 1H 102K-T	B	120.5/83.2
C381	4030016790	S.CER C1005 JB 1E 103K-T	B	135.9/70.5
C383	4030017460	S.CER C1005 JB 1H 102K-T	B	135.9/71.5
C384	4510008870	S.ELE EEE1AA471UP	T	129.9/64.9
C386	4030016930	S.CER C1005 JB 1A 104K-T	B	138.8/53.7
C387	4030017720	S.CER C1005 JB 1H 331K-T	B	135.4/51.3
C388	4030018860	S.CER C1005 JB 0J 105K-T	B	138.6/52.2
C389	4030016930	S.CER C1005 JB 1A 104K-T	B	139.1/49.4
C390	4030016930	S.CER C1005 JB 1A 104K-T	B	137.8/55.4
C391	4030016930	S.CER C1005 JB 1A 104K-T	T	101.8/82.3
C392	4030017460	S.CER C1005 JB 1H 102K-T	B	127.8/76.8
C393	4030017460	S.CER C1005 JB 1H 102K-T	B	99/79
C394	4030017420	S.CER C1005 CH 1H 470J-T	B	115.4/68
C395	4030017460	S.CER C1005 JB 1H 102K-T	B	126.5/77.1
C397	4030017460	S.CER C1005 JB 1H 102K-T	B	99.8/86.3
C398	4030017420	S.CER C1005 CH 1H 470J-T	B	100.8/86.3
C399	4030018860	S.CER C1005 JB 0J 105K-T	B	136.3/37.1
C400	4030016930	S.CER C1005 JB 1A 104K-T	B	139.7/35.3
C411	4510008780	S.ELE EEE1EA471P	T	117.2/63.6
C412	4510008780	S.ELE EEE1EA471P	T	132.7/54.3
C413	4030018900	S.CER C1005 JB 0J 474K-T	B	135.1/46.8
C414	4510008540	S.ELE EEE1CA100SR	T	118.7/50.5
C415	4030016930	S.CER C1005 JB 1A 104K-T	B	103/23.8
C416	4030016930	S.CER C1005 JB 1A 104K-T	B	120.3/51.6
C417	4030016790	S.CER C1005 JB 1E 103K-T	B	115.6/52.8
C418	4030017460	S.CER C1005 JB 1H 102K-T	T	109.6/54.5
C419	4030016790	S.CER C1005 JB 1E 103K-T	T	42.9/39.2
C420	4030017500	S.CER C1005 CH 1H 560J-T	T	41/37.4
C421	4030016930	S.CER C1005 JB 1A 104K-T	B	36/24.7
C422	4030016790	S.CER C1005 JB 1E 103K-T	T	43.1/31.9
C423	4030018010	S.CER C1005 CH 1H 360J-T	T	39.9/35.3
C424	4030016930	S.CER C1005 JB 1A 104K-T	T	38.9/32.2
C425	4030017460	S.CER C1005 JB 1H 102K-T	B	134.8/66.1
C426	4030018860	S.CER C1005 JB 0J 105K-T	B	110/12.1
C427	4030017460	S.CER C1005 JB 1H 102K-T	B	109.1/10.4
C430	4030017570	S.CER C1005 CH 1H 040B-T	T	78.2/44.8
J1	6510026770	S.CON AXK540147YG	T	124.5/9.7
J2	6510026770	S.CON AXK540147YG	T	101.5/9.7
J3	6510021301	S.CON 52365-1071	T	90.3/62.6
J5	6510023092	S.CON 20FLT-SM2-TB(LF)(SN)(M)	T	108.3/81.8
J7	6450000140	CON HSJ0807-01-010		
J10	6510023092	S.CON 20FLT-SM2-TB(LF)(SN)(M)	T	71/7
EP1	6910015600	S.BEA ACZ1005Y-241 (240)	B	39.8/8.1
EP2	6910015370	S.BEA ACZ1005Y-102-T	B	50.1/12.4
EP3	6910015370	S.BEA ACZ1005Y-102-T	T	82.6/37.1
EP4	6910010280	BEA HF70BB9.5X10.4X4.9		
EP5	6910010280	BEA HF70BB9.5X10.4X4.9		
EP6	6910011560	BEA HF70BB4.5X5X1.6		

[FRONT UNIT]

REF NO.	PARTS NO.	DESCRIPTION	M.	H/V LOCATION
IC501	1130009121	S.IC S1D15206F00A200	B	33.1/19.5
IC502	1110005771	S.IC S-80942CNMC-G9CT2G	B	61.4/9.7
IC503	1140010771	S.IC HD64F3687FPV(EMPTY)	B	62.1/25.2
IC504	1130007111	S.IC TC7W04FU(TE12L,F)	B	73.9/26.3
IC505	1110005310	S.IC AN6123MS	B	10/8.4
IC506	1110005350	S.IC NJM2870F05-TE1-#FZZB	B	84.9/9.9
IC507	1130006221	S.IC TC4W53FU(TE12L,F)	B	6.5/19
IC508	1130008561	S.IC TC75S51F(TE85L,F)	B	74/11.3
Q501	1590001050	S.TRA DTC114TUA T106	B	15.1/32.9
Q502	1590001050	S.TRA DTC114TUA T106	B	18/32.9
Q503	1590001330	S.TRA DTA114EUA T106	B	77/24.7
Q504	1530002851	S.TRA 2SC4116-BL(TE85R,F)	B	91.5/22.4
Q505	1590001050	S.TRA DTC114TUA T106	B	92.5/18.8
Q506	1590000680	S.TRA DTC114EUA T106	B	77/27.4
Q507	1590001050	S.TRA DTC114TUA T106	B	51.4/30.2
D501	1750000370	S.DIO DA221 TL	T	3.5/27.1
D502	1750000370	S.DIO DA221 TL	T	3.5/25
D503	1750000370	S.DIO DA221 TL	T	3.5/22.9
D504	1790001261	S.DIO MA2S077G0L	B	50.9/23.1
D505	1790001251	S.DIO MA2S1110GL	B	3.3/23.3
D506	1790001251	S.DIO MA2S1110GL	B	82.1/21.7
D507	1790001251	S.DIO MA2S1110GL	B	79.7/25.8
D508	1790000951	S.ZEN MAZ8056GML	T	4.8/19.7
D509	1790000951	S.ZEN MAZ8056GML	T	8.6/19.7
D510	1790000951	S.ZEN MAZ8056GML	T	10.4/19.7
X501	6050011720	S.XTA CR-764 SMD-49TB 19.6608 MHz <KDS>	B	49.6/18.9
L501	6200003640	S.COI MLF1608E 100K-T	B	12/19.1
R501	7030003810	S.RES ERJ3GEYJ 125 V (1.2M)	B	46/28.8
R502	7030003810	S.RES ERJ3GEYJ 125 V (1.2M)	B	46.6/23.8
R503	7310005510	S.TRI TMC3ADCS5X (470K)	B	45.5/26.3
R504	7030005120	S.RES ERJ2GEJ 102 X (1K)	B	8/29.3
R505	7030005120	S.RES ERJ2GEJ 102 X (1K)	B	10/29.3
R506	7030005120	S.RES ERJ2GEJ 102 X (1K)	B	12/29.3
R507	7030005010	S.RES ERJ2GEJ 681 X (680)	T	14.3/37.2
R508	7030005120	S.RES ERJ2GEJ 102 X (1K)	T	14.3/36.3
R509	7510001730	S.THE ERTJOEP 473J	B	59.9/17.1
R510	7030005120	S.RES ERJ2GEJ 102 X (1K)	B	61.1/17.1
R511	7030005530	S.RES ERJ2GEJ 100 X (10)	B	57.1/19.4
R512	7030008010	S.RES ERJ2GEJ 123 X (12K)	B	52/22.7
R513	7030005050	S.RES ERJ2GEJ 103 X (10K)	B	63.8/10.2
R514	7030005160	S.RES ERJ2GEJ 105 X (1M)	B	56.1/20.7
R515	7030008010	S.RES ERJ2GEJ 123 X (12K)	B	52.3/23.9
R516	7030008010	S.RES ERJ2GEJ 123 X (12K)	B	49.5/23.9
R517	7410001140	S.ARR EXB28V104JX	B	66.5/10.8
R518	7410001140	S.ARR EXB28V104JX	B	67.5/19.2
R519	7030005090	S.RES ERJ2GEJ 104 X (100K)	B	51.5/26.9
R520	7030005090	S.RES ERJ2GEJ 104 X (100K)	B	71.6/26.8
R522	7030005090	S.RES ERJ2GEJ 104 X (100K)	T	3.3/17.2
R523	7030004980	S.RES ERJ2GEJ 101 X (100)	B	13.2/10.9
R524	7030005090	S.RES ERJ2GEJ 104 X (100K)	B	71.6/28.4
R525	7030005240	S.RES ERJ2GEJ 473 X (47K)	B	80.2/27
R526	7030007300	S.RES ERJ2GEJ 332 X (3.3K)	B	79/24.4
R528	7030005090	S.RES ERJ2GEJ 104 X (100K)	B	71.7/24.1
R529	7030005090	S.RES ERJ2GEJ 104 X (100K)	B	82.1/19.6
R530	7030005160	S.RES ERJ2GEJ 105 X (1M)	B	5.4/10
R531	7030009280	S.RES ERJ2GEJ 391 X	B	92/20.6
R532	7030005120	S.RES ERJ2GEJ 102 X (1K)	B	91.4/24.2
R533	7030007290	S.RES ERJ2GEJ 222 X (2.2K)	B	91.4/25.2
R534	7030009140	S.RES ERJ2GEJ 272 X (2.7K)	B	90.6/20.2
R535	7030005090	S.RES ERJ2GEJ 104 X (100K)	B	82.4/31.4
R536	7030005050	S.RES ERJ2GEJ 103 X (10K)	B	77.8/22.9
R537	7030005090	S.RES ERJ2GEJ 104 X (100K)	T	7.2/19.2
R538	7030005090	S.RES ERJ2GEJ 104 X (100K)	T	6.2/19.2
R539	7030010040	S.RES ERJ2GEJ-JPW	B	76/15.9
R540	7030009290	S.RES ERJ2GEJ 562 X (5.6K)	B	4.3/10.9
R541	7030007290	S.RES ERJ2GEJ 222 X (2.2K)	B	3.3/16.6
R542	7030009160	S.RES ERJ2GEJ 181 X (180)	B	89.8/24.2
R543	7030009160	S.RES ERJ2GEJ 181 X (180)	B	89.8/25.2
R545	7030005240	S.RES ERJ2GEJ 473 X (47K)	T	11.8/19.2
R546	7210003050	VAR EVU-F2KFK3 B14 (10KB)		
R547	7030005120	S.RES ERJ2GEJ 102 X (1K)	T	11.8/17.2
R548	7030005120	S.RES ERJ2GEJ 102 X (1K)	T	6.8/17.2
R549	7030005120	S.RES ERJ2GEJ 102 X (1K)	T	9.3/17.2
R550	7030005240	S.RES ERJ2GEJ 473 X (47K)	B	10.9/19.4
R551	7030007300	S.RES ERJ2GEJ 332 X (3.3K)	B	11/5.8
R552	7030004990	S.RES ERJ2GEJ 221 X (220)	B	10.1/5.8
R553	7030007290	S.RES ERJ2GEJ 222 X (2.2K)	B	75.2/8.7
R554	7030007290	S.RES ERJ2GEJ 222 X (2.2K) [A]	B	71.4/12.4
	7030007290	S.RES ERJ2GEJ 222 X (2.2K) [E]		
	7030007290	S.RES ERJ2GEJ 222 X (2.2K) [C]		
	7030009140	S.RES ERJ2GEJ 272 X (2.7K) [B]		
	7030009140	S.RES ERJ2GEJ 272 X (2.7K) [F]		
	7030009140	S.RES ERJ2GEJ 272 X (2.7K) [D]		
	7030009140	S.RES ERJ2GEJ 272 X (2.7K) [G]		
	7030009140	S.RES ERJ2GEJ 272 X (2.7K) [K]		
	7030009140	S.RES ERJ2GEJ 272 X (2.7K) [J]		
	7030009140	S.RES ERJ2GEJ 272 X (2.7K) [H]		
	7030009140	S.RES ERJ2GEJ 272 X (2.7K) [I]		
	7030009140	S.RES ERJ2GEJ 272 X (2.7K) [L]		

M.=Mounted side (T: Mounted on the Top side, B: Mounted on the Bottom side)
S.=Surface mount

[FRONT UNIT]

REF NO.	PARTS NO.	DESCRIPTION			M.	H/V LOCATION
R555	7030005220	S.RES	ERJ2GEJ 223 X (22K)	[A]	B	71.4/11.5
	7030005220	S.RES	ERJ2GEJ 223 X (22K)	[E]		
	7030005220	S.RES	ERJ2GEJ 223 X (22K)	[C]		
	7030008290	S.RES	ERJ2GEJ 183 X (18K)	[B]		
	7030008290	S.RES	ERJ2GEJ 183 X (18K)	[F]		
	7030008290	S.RES	ERJ2GEJ 183 X (18K)	[D]		
	7030008290	S.RES	ERJ2GEJ 183 X (18K)	[G]		
	7030008290	S.RES	ERJ2GEJ 183 X (18K)	[K]		
	7030008290	S.RES	ERJ2GEJ 183 X (18K)	[J]		
	7030008290	S.RES	ERJ2GEJ 183 X (18K)	[H]		
	7030008290	S.RES	ERJ2GEJ 183 X (18K)	[I]		
	7030008290	S.RES	ERJ2GEJ 183 X (18K)	[L]		
R556	7030005050	S.RES	ERJ2GEJ 103 X (10K)		B	73.2/8.7
R557	7030005050	S.RES	ERJ2GEJ 103 X (10K)		B	71.8/10.2
R558	7030005060	S.RES	ERJ2GEJ 333 X (33K)	[A]	B	74/13.5
	7030005060	S.RES	ERJ2GEJ 333 X (33K)	[E]		
	7030005060	S.RES	ERJ2GEJ 333 X (33K)	[C]		
	7030008010	S.RES	ERJ2GEJ 123 X (12K)	[B]		
	7030008010	S.RES	ERJ2GEJ 123 X (12K)	[F]		
	7030008010	S.RES	ERJ2GEJ 123 X (12K)	[D]		
	7030008010	S.RES	ERJ2GEJ 123 X (12K)	[G]		
	7030008010	S.RES	ERJ2GEJ 123 X (12K)	[K]		
	7030008010	S.RES	ERJ2GEJ 123 X (12K)	[J]		
	7030008010	S.RES	ERJ2GEJ 123 X (12K)	[H]		
	7030008010	S.RES	ERJ2GEJ 123 X (12K)	[I]		
	7030008010	S.RES	ERJ2GEJ 123 X (12K)	[L]		
R559	7030005090	S.RES	ERJ2GEJ 104 X (100K)		B	11/20.8
R560	7030005090	S.RES	ERJ2GEJ 104 X (100K)		T	6.2/20.8
C501	4030016930	S.CER	C1005 JB 1A 104K-T		B	41.8/30.2
C502	4030016930	S.CER	C1005 JB 1A 104K-T		B	40.9/30.2
C503	4030016930	S.CER	C1005 JB 1A 104K-T		B	42.7/30.2
C504	4030016930	S.CER	C1005 JB 1A 104K-T		B	43.6/30.2
C505	4030016930	S.CER	C1005 JB 1A 104K-T		B	44.5/30.2
C506	4030017490	S.CER	C1608 JB 1A 105K-T		B	44.7/23.2
C507	4030017460	S.CER	C1005 JB 1H 102K-T		B	46.1/22.7
C508	4030017490	S.CER	C1608 JB 1A 105K-T		B	43.4/23.2
C509	4030017730	S.CER	C1005 JB 1H 471K-T		B	13.1/33.3
C510	4030017730	S.CER	C1005 JB 1H 471K-T		B	18.6/30.5
C511	4030016790	S.CER	C1005 JB 1E 103K-T		B	58.3/17.1
C512	4030016930	S.CER	C1005 JB 1A 104K-T		B	62/17.1
C513	4030017030	S.CER	C1005 JB 1A 273K-T		B	59.1/10.2
C514	4030016930	S.CER	C1005 JB 1A 104K-T		B	58.3/18.3
C515	4030017630	S.CER	C1005 CH 1H 120J-T		B	57.1/17.8
C516	4030017580	S.CER	C1005 CH 1H 060C-T		B	48.9/22.7
C517	4030016790	S.CER	C1005 JB 1E 103K-T		B	52.9/22.7
C518	4030017640	S.CER	C1005 CH 1H 150J-T		B	49.8/22.7
C519	4030016930	S.CER	C1005 JB 1A 104K-T		B	53.8/22.7
C520	4030017420	S.CER	C1005 CH 1H 470J-T		T	12.5/36.3
C521	4030017460	S.CER	C1005 JB 1H 102K-T		B	78.8/27.5
C522	4550006480	S.TAN	TEESVA 1C 475M8R		B	87.7/9.8
C523	4550006250	S.TAN	TEESVA 1A 106M8R		B	12.8/7.6
C524	4550006250	S.TAN	TEESVA 1A 106M8R		B	7.2/7.6
C525	4030017330	S.CER	C1005 JF 1C 104Z-T		B	85.7/7.7
C526	4030016790	S.CER	C1005 JB 1E 103K-T		B	84.1/7.7
C527	4030017420	S.CER	C1005 CH 1H 470J-T		T	5.9/17.2
C528	4030017460	S.CER	C1005 JB 1H 102K-T		T	8.4/17.2
C529	4550006250	S.TAN	TEESVA 1A 106M8R		B	82.1/9.8
C530	4030016930	S.CER	C1005 JB 1A 104K-T		B	84.1/12.1
C531	4030017460	S.CER	C1005 JB 1H 102K-T		B	79/22.5
C533	4030017460	S.CER	C1005 JB 1H 102K-T		B	80/22.5
C534	4030017420	S.CER	C1005 CH 1H 470J-T		B	76.2/22.9
C535	4030016930	S.CER	C1005 JB 1A 104K-T		B	5.4/9.1
C536	4030018860	S.CER	C1005 JB 0J 105K-T		B	3.3/18.2
C537	4030017460	S.CER	C1005 JB 1H 102K-T		B	14/25
C538	4030017330	S.CER	C1005 JF 1C 104Z-T		B	6/10.9
C539	4030017420	S.CER	C1005 CH 1H 470J-T		T	10.9/17.2
C540	4030017460	S.CER	C1005 JB 1H 102K-T		B	10.9/17.8
C541	4030017420	S.CER	C1005 CH 1H 470J-T		B	8.5/10.9
C543	4030017420	S.CER	C1005 CH 1H 470J-T		B	77.6/16.7
C544	4030017420	S.CER	C1005 CH 1H 470J-T		B	79.8/16.7
C545	4030017420	S.CER	C1005 CH 1H 470J-T		B	77.6/15.8
C546	4030017420	S.CER	C1005 CH 1H 470J-T		B	74/15.3
C547	4030017460	S.CER	C1005 JB 1H 102K-T		B	74/16.2
C548	4030017490	S.CER	C1608 JB 1A 105K-T		B	9.7/19.3
C549	4030016930	S.CER	C1005 JB 1A 104K-T		B	3.7/21.2
C550	4030018900	S.CER	C1005 JB 0J 474K-T		B	70.1/11.9
C551	4030018860	S.CER	C1005 JB 0J 105K-T		B	70.9/10.2
C552	4030017460	S.CER	C1005 JB 1H 102K-T		B	75.2/6.9
C553	4030017460	S.CER	C1005 JB 1H 102K-T		B	71.4/13.3
C554	4030016790	S.CER	C1005 JB 1E 103K-T		B	74.2/8.7
C555	4030017460	S.CER	C1005 JB 1H 102K-T	[A]	B	74/14.4
	4030017460	S.CER	C1005 JB 1H 102K-T	[E]		
	4030017460	S.CER	C1005 JB 1H 102K-T	[C]		
	4030018920	S.CER	C1005 JB 1H 392K-T	[B]		
	4030018920	S.CER	C1005 JB 1H 392K-T	[F]		
	4030018920	S.CER	C1005 JB 1H 392K-T	[D]		
	4030018920	S.CER	C1005 JB 1H 392K-T	[G]		
	4030018920	S.CER	C1005 JB 1H 392K-T	[K]		
	4030018920	S.CER	C1005 JB 1H 392K-T	[J]		
	4030018920	S.CER	C1005 JB 1H 392K-T	[H]		
	4030018920	S.CER	C1005 JB 1H 392K-T	[I]		
	4030018920	S.CER	C1005 JB 1H 392K-T	[L]		
C556	4550006480	S.TAN	TEESVA 1C 475M8R		B	76.9/10.2
J501	6510022022	S.CON	14FLT-SM2-TB(LF)(SN)(M)		B	88/28.5
J502	6510023092	S.CON	20FLT-SM2-TB(LF)(SN)(M)		B	75.5/19.5
J503	6450002210	CON	3017-8821 <KIN>			
DS501	5030003020	LCD	L6-0226TVM-3 <TES>			
DS502	5040002670	S.LED	CL-165HR/YG		T	18.2/35.9
DS503	5040002310	S.LED	SML-311YTT86		T	32.8/6.5

[FRONT UNIT]

REF NO.	PARTS NO.	DESCRIPTION		M.	H/V LOCATION
DS504	5040002310	S.LED	SML-311YTT86	T	46.1/6.3
DS505	5040002310	S.LED	SML-311YTT86	T	59.8/6.3
DS506	5040002310	S.LED	SML-311YTT86	T	92.3/24.5
DS507	5040002310	S.LED	SML-311YTT86	T	73.1/6.5
DS508	5040002310	S.LED	SML-311YTT86	T	31.7/26
DS509	5040002310	S.LED	SML-311YTT86	T	40.2/26
DS510	5040002310	S.LED	SML-311YTT86	T	48.7/26
DS511	5040002310	S.LED	SML-311YTT86	T	74.2/26
DS512	5040002310	S.LED	SML-311YTT86	T	65.7/26
DS513	5040002310	S.LED	SML-311YTT86	T	57.2/26
SP501	2510001400	SPE	3050S-E6227 <PRI>		
EP502	8930072220	LCD	SRCN-2979-SP-N-W (SHJ)		

M.=Mounted side (T: Mounted on the Top side, B: Mounted on the Bottom side)
S.=Surface mount

[CONNECT UNIT]

REF NO.	PARTS NO.	DESCRIPTION	M.	H/V LOCATION
C601	4030017420	S.CER C1005 CH 1H 470J-T	T	12.7/4.6
C602	4030017420	S.CER C1005 CH 1H 470J-T	T	15.4/4.6
C603	4030017420	S.CER C1005 CH 1H 470J-T	T	18.2/4.6
C604	4030017420	S.CER C1005 CH 1H 470J-T	T	19.6/4.6
C605	4030017420	S.CER C1005 CH 1H 470J-T	T	20.9/4.6
C606	4030017420	S.CER C1005 CH 1H 470J-T	T	25.1/4.6
C607	4030017420	S.CER C1005 CH 1H 470J-T	T	37.5/13.2
C608	4030017420	S.CER C1005 CH 1H 470J-T	T	16.8/4.6
C609	4030017420	S.CER C1005 CH 1H 470J-T	T	40.3/13.2
C610	4030017420	S.CER C1005 CH 1H 470J-T	T	41.7/4.6
J601	6510025240	S.CON IMSA-9631S-20Y912	B	32.2/16.2
J602	6510023210	CON CD6125SA1J0 <CVI>		

[MAIN-A UNIT] (MDC compatible)

REF NO.	PARTS NO.	DESCRIPTION	M.	H/V LOCATION
IC1	1110005340	S.IC NJM12902V-TE1-#ZZZB	T	82.3/12.9
IC2	1110006221	S.IC AK2346P-E2/P	B	44.7/11.7
IC3	1140013200	S.IC CD4053BPWR	B	58.7/9.3
IC4	1130010100	S.IC LMX2352TMX/NOPB	T	82.9/46
IC5	1110003491	S.IC TA31136FNG(D,EL)	T	28/13.9
IC6	1190001350	S.IC M62364FP 600D	B	84.9/12.9
IC7	1110005340	S.IC NJM12902V-TE1-#ZZZB	T	108.5/43.7
IC8	1140013200	S.IC CD4053BPWR	B	58.7/16.1
IC9	1130012960	S.IC BU8872FS-E2	B	133.1/21.3
IC10	1190002051	S.IC SPM5001-TL-E	B	33.8/36.9
IC12	1190001340	S.IC M62334FP 600C	B	9.1/25.7
IC13	1110005771	S.IC S-80942CNMC-G9CT2G	B	126/44.8
IC14	1140014550	S.IC HD64F2506RFC26DV(EMPTY)	B	111.8/35.7
IC15	1150002073	IC RA60H1317M-125 [B]		
	1150002042	IC RA30H1317M-121 [F]		
	1150002042	IC RA30H1317M-121 [D]		
	1150002073	IC RA60H1317M-125 [G]		
	1150002042	IC RA30H1317M-121 [K]		
	1150002073	IC RA60H1317M-125 [J]		
	1150002073	IC RA60H1317M-125 [H]		
	1150002073	IC RA60H1317M-125 [I]		
	1150002042	IC RA30H1317M-121 [L]		
IC16	1140014160	S.IC 24LC1025T-I/SM <SEI>	B	133.3/29
IC17	1110002751	S.IC TA75S01F(TE85R,F)	T	54.1/70.4
IC18	1180000970	S.IC AN78L05M-(E1)	B	113/65.3
IC19	1120002510	S.IC DS14C232TM S	T	104.7/70.5
IC20	1180001252	S.IC TA7808F(TE16L1,NQ)	B	121.5/65.8
IC21	1110003091	IC LA4425A-E		
IC22	1110002751	S.IC TA75S01F(TE85R,F)	B	135.5/54.4
IC23	1130006221	S.IC TC4W53FU(TE12L,F)	B	106.9/9.6
IC25	1110006230	S.IC NJM2711F-TE1-#ZZZB	B	26.1/6.6
Q1	1590003231	S.TRA UNR9113G0L	B	15.2/6
Q3	1530002851	S.TRA 2SC4116-BL(TE85R,F)	B	36.4/15.5
Q4	1590001650	S.TRA XP4601(TX)	B	92.8/12.4
Q5	1590003291	S.TRA UNR9213G0L	B	76.7/50
Q6	1530002851	S.TRA 2SC4116-BL(TE85R,F)	T	63.2/55.1
Q7	1560000541	S.FET 2SK880-Y(T5RICOM,F)	B	81.2/27.1
Q8	1530002851	S.TRA 2SC4116-BL(TE85R,F)	B	79.2/31.8
Q9	1530002851	S.TRA 2SC4116-BL(TE85R,F)	B	81.7/31.8
Q10	1560001360	S.FET 2SK3019 TL	B	57/31.6
Q12	1530002601	S.TRA 2SC4215-O(TE85R,F)	T	26.9/20
Q16	1590003291	S.TRA UNR9213G0L	T	113.2/47.6
Q17	1530002920	S.TRA 2SC4226-T1 R25	T	50.9/47.6
Q18	1530002920	S.TRA 2SC4226-T1 R25	T	61.6/42.6
Q19	1530002920	S.TRA 2SC4226-T1 R25	T	72.1/43
Q20	1590003231	S.TRA UNR9113G0L	B	33.9/25.2
Q22	1530003311	S.TRA 2SC5107-O(TE85R,F)	T	58.1/46.3
Q23	1590001400	S.TRA XP1214(TX)	B	55.7/40.9
Q24	1590003281	S.TRA UNR9211G0L	B	55.8/38.2
Q25	1530003311	S.TRA 2SC5107-O(TE85R,F)	B	65.9/49.5
Q26	1590001400	S.TRA XP1214(TX)	B	67.2/43.1
Q27	1590003231	S.TRA UNR9113G0L	T	124.7/52
Q28	1590003291	S.TRA UNR9213G0L	B	123.4/46.3
Q29	1530003311	S.TRA 2SC5107-O(TE85R,F)	B	53.5/51.2
Q30	1530000372	S.TRA 2SC3356-T1B R (R24)	B	65.5/66
Q31	1580000731	S.FET 3SK293(TE85L,F)	B	10.2/38.6
Q32	1560000841	S.FET 2SK1829(TE85R,F)	T	11/42.5
Q33	1530002851	S.TRA 2SC4116-BL(TE85R,F) [B]	T	47.5/69.4
	1530002851	S.TRA 2SC4116-BL(TE85R,F) [G]		
	1530002851	S.TRA 2SC4116-BL(TE85R,F) [J]		
	1530002851	S.TRA 2SC4116-BL(TE85R,F) [H]		
	1530002851	S.TRA 2SC4116-BL(TE85R,F) [I]		
Q34	1590003291	S.TRA UNR9213G0L	T	83/67.4
Q35	1520000460	S.TRA 2SB1132 T100 R	T	100.1/57.9
Q36	1590001190	S.TRA XP6501-(TX).AB	T	104.3/55.7
Q37	1540000550	S.TRA 2SD1664 T100Q	T	75.5/63.6
Q38	1510000920	S.TRA 2SA1577 T106 Q	T	39.3/21.3
Q39	1590003291	S.TRA UNR9213G0L	T	42.6/21.3
Q40	1590003291	S.TRA UNR9213G0L	T	104.1/51.9
Q41	1590001451	S.FET 2SJ144-GR (TE85R,F)	B	110.3/83.3
Q42	1590003291	S.TRA UNR9213G0L	B	132.1/45
Q43	1590000990	S.TRA DTC363EK T146	B	135.7/49
Q44	1590003291	S.TRA UNR9213G0L	T	108.5/21.6
Q45	1590003291	S.TRA UNR9213G0L	B	133.3/58.9
Q46	1590003291	S.TRA UNR9213G0L	T	117.9/84.4
Q47	1550000100	S.FET 2SJ377 (TE16L1,NQ)	B	131.3/71.5
Q48	1590003291	S.TRA UNR9213G0L	B	127.4/78
Q49	1530002851	S.TRA 2SC4116-BL(TE85R,F)	B	139.3/37.2
Q50	1530002601	S.TRA 2SC4215-O(TE85R,F)	T	40.6/39.2
Q51	1590003560	S.FET TPC6104 (TE85L,F)	B	133.6/63.4
Q52	1590003291	S.TRA UNR9213G0L	B	128.2/61.1
Q53	1590000430	S.TRA DTC144EUA T106	B	52.3/67.4
Q54	1590000430	S.TRA DTC144EUA T106	T	25.5/6.3
Q55	1560001360	S.FET 2SK3019 TL	T	75.5/20.9
Q57	1590003291	S.TRA UNR9213G0L	T	112/14.4
Q58	1530002851	S.TRA 2SC4116-BL(TE85R,F)	B	24.9/9.5
Q59	1590003291	S.TRA UNR9213G0L	B	96.6/8
Q60	1590003291	S.TRA UNR9213G0L	B	97.8/11.6
D1	1750001070	S.DIO DAN235ETL	T	10.4/15.7
D2	1750001070	S.DIO DAN235ETL	T	22.6/8.9
D3	1790001251	S.DIO MA2S1110GL	T	61.3/55
D4	1790001261	S.DIO MA2S077G0L	B	72.9/49.8
D5	1790001261	S.DIO MA2S077G0L	B	71.1/51.3
D6	1750001070	S.DIO DAN235ETL	T	30.6/20.8
D7	1160000140	S.DIO DAP222 TL	T	58.9/14
D8	1720000791	S.VAR HVC321B1TRF-E	T	49.5/32.4
D9	1720000791	S.VAR HVC321B1TRF-E	T	52.7/32.4
D10	1720000791	S.VAR HVC321B1TRF-E	T	60.5/30
D11	1720000641	S.VAR 1SV284(TPH3,F)	T	52.7/33.6
D12	1720000641	S.VAR 1SV284(TPH3,F)	T	52.7/34.8
D13	1720000791	S.VAR HVC321B1TRF-E	T	63.8/28.6

M.=Mounted side (T: Mounted on the Top side, B: Mounted on the Bottom side)
S.=Surface mount

[MAIN-A UNIT] (MDC compatible)

REF NO.	PARTS NO.	DESCRIPTION	M.	H/V LOCATION
D14	1720000791	S.VAR HVC321B1TRF-E	T	73.6/30.4
D15	1720000641	S.VAR 1SV284(TPH3,F)	T	63.8/31.3
D17	1720000791	S.VAR HVC321B1TRF-E	T	72.1/27.9
D18	1750000721	S.VAR HVC375BTRF-E	T	69.8/33.3
D19	1160000140	S.DIO DAP222 TL	B	120.5/17.8
D20	1720000471	S.VAR 1SV239(TPH3,F)	T	69.4/34.9
D21	1750001070	S.DIO DAN235ETL	T	36.3/38.3
D22	1750000520	S.DIO DAN222TL	T	124.7/54.5
D23	1790001261	S.DIO MA2S077G0L	T	125.6/39.2
D24	1790001261	S.DIO MA2S077G0L	B	50.7/53.2
D25	1790001261	S.DIO MA2S077G0L	B	49.3/50.8
D26	1750000711	S.VAR HVC350BTRF-E	B	17.7/36
D27	1750000711	S.VAR HVC350BTRF-E	B	16.2/36
D30	1750000721	S.VAR HVC375BTRF-E	B	8.6/44.7
D31	1790001251	S.DIO MA2S1110GL	T	8.5/43.7
D32	1750001080	S.DIO RB886G T2R	T	64.1/76.5
D33	1750001080	S.DIO RB886G T2R	T	65.8/75.8
D34	1750000721	S.VAR HVC375BTRF-E	B	8.6/47.4
D35	1790001621	S.DIO 1SV308(TPL3,F)	B	17.9/48.1
D37	1750000370	S.DIO DA221 TL	T	75.5/67.6
D38	1750000511	S.DIO UX9401F-STD/TR <INT> [F]	T	30/66
	1750000511	S.DIO UX9401F-STD/TR <INT> [D]		
	1750000511	S.DIO UX9401F-STD/TR <INT> [K]		
	1750000511	S.DIO UX9401F-STD/TR <INT> [L]		
D39	1710001061	DIO L407CDB [B]		
	1710001061	DIO L407CDB [G]		
	1710001061	DIO L407CDB [J]		
	1710001061	DIO L407CDB [H]		
	1710001061	DIO L407CDB [I]		
D42	1750001360	S.DIO L709CER (9401)	T	34.6/58.7
D45	1750000520	S.DIO DAN222TL	T	91.8/57.5
D46	1750000520	S.DIO DAN222TL	T	89.6/57.5
D47	1790001211	S.DIO 1SS375-TL-E	B	29.2/63.8
D48	1750000520	S.DIO DAN222TL	B	93/61.5
D49	1790001211	S.DIO 1SS375-TL-E	B	6/52.8
D50	1750000370	S.DIO DA221 TL	B	97.2/65.8
D51	1790001211	S.DIO 1SS375-TL-E	B	3.9/79.7
D52	1750000520	S.DIO DAN222TL	B	132.5/41
D53	1790001251	S.DIO MA2S1110GL	B	133.3/47.3
D55	1750000370	S.DIO DA221 TL	B	108.8/57.4
D56	1750000370	S.DIO DA221 TL	T	108.8/60.6
D57	1750000370	S.DIO DA221 TL	B	95.1/65.8
D58	1750000520	S.DIO DAN222TL	T	94/57.5
D59	1750000520	S.DIO DAN222TL	B	104/80.4
D62	1790000700	DIO DSA3A1		
D63	1750000520	S.DIO DAN222TL	B	110.3/80.9
D65	1750000520	S.DIO DAN222TL	B	129.7/58.9
D66	1790001621	S.DIO 1SV308(TPL3,F)	T	33.9/38.8
D67	1790001621	S.DIO 1SV308(TPL3,F)	T	33.9/37.5
D68	1790001621	S.DIO 1SV308(TPL3,F)	T	29.9/23.2
D69	1790001621	S.DIO 1SV308(TPL3,F)	T	31.2/23.2
D70	1750000351	S.DIO 1SV252(TE85L,F)	T	73.6/75.5
D71	1730002411	S.ZEN MAZ8200GHL	T	118.3/86.3
D72	1750000520	S.DIO DAN222TL	T	87.4/57.5
D73	1750000520	S.DIO DAN222TL	B	93/64.5
FI1	2020001410	CER CFWLB450KGFA-B0 (CFWM450G)		
FI2	2020002470	S.CER CFWKA450KHFA001-R0	T	15.4/9.3
FI3	2030000500	S.MON DSF753SBF 46.35 MHz (FL-401)	T	24.7/28.4
FI4	2030000670	S.MON DSF753SBF 46.35 MHz (FL-420)	T	35.6/28.4
FI5	2040001440	S.LC NFE31PT152Z1E9L (NFM60R20T152)	B	94.5/77
FI6	2040001440	S.LC NFE31PT152Z1E9L (NFM60R20T152)	B	94.5/73.7
FI7	2040001440	S.LC NFE31PT152Z1E9L (NFM60R20T152) [B]	B	94.5/70.3
	2040001440	S.LC NFE31PT152Z1E9L (NFM60R20T152) [G]		
	2040001440	S.LC NFE31PT152Z1E9L (NFM60R20T152) [J]		
	2040001440	S.LC NFE31PT152Z1E9L (NFM60R20T152) [H]		
	2040001440	S.LC NFE31PT152Z1E9L (NFM60R20T152) [I]		
X1	6050012380	S.XTA CR-826 DSA535SD 15.3 MHz	T	84.2/34.7
X2	6050011730	S.XTA CR-765 SMD-49TA 3.6864 MHz <KDS>	T	48.3/11.6
X3	6070000300	S.DIS JTBM450CX24 <JJE>	T	37.1/10.3
X4	6050012320	S.XTA CR-818 SMD-49 4.194304 MHz <KDS>	T	139.1/21.9
X5	6050011720	S.XTA CR-764 SMD-49TB 19.6608 MHz <KDS>	T	120.5/44.3
L1	6200004660	S.COI MLF1608A 1R8K-T	T	82.7/54.3
L2	6200003540	S.COI MLF1608D R22K-T	B	34.4/14.7
L3	6200004480	S.COI MLF1608D R82K-T	B	29.7/16.2
L4	6200007911	S.COI ELJRF 18NJFB	B	75.9/48.3
L5	6200007120	S.COI ELJND 1R0J	T	49.4/30.8
L6	6200007120	S.COI ELJND 1R0J	T	52.7/30.8
L7	6200007120	S.COI ELJND 1R0J	T	60.5/28.4
L8	6200007170	S.COI MLF1608A 3R3K-T	T	74/27.5
L9	6200007170	S.COI MLF1608A 3R3K-T	T	69.8/32
L10	6200010600	S.COI C6342A-67NG-A	T	51.2/39.2
L11	6200003640	S.COI MLF1608E 100K-T	T	48.3/33.6
L12	6200009910	S.COI C6342A-88NG-A	T	61.6/35.5
L13	6200007120	S.COI ELJND 1R0J	T	63.8/27
L14	6200003640	S.COI MLF1608E 100K-T	T	60/31.4
L15	6200012450	S.COI 0.25-1.9-8TL 73N (COAT) <COMO>	T	73.3/35.9
L16	6200008090	S.COI LQW2BHN68NJ03L	T	69.5/28

[MAIN-A UNIT] (MDC compatible)

REF NO.	PARTS NO.	DESCRIPTION	M.	H/V LOCATION
L17	6200003640	S.COI MLF1608E 100K-T	T	73.7/32.6
L18	6130003000	S.COI #617DB-1714=P3	B	39/36.2
L19	6130003000	S.COI #617DB-1714=P3	B	34.5/42.6
L20	6200009181	S.COI ELJRE R10JFA	T	57.3/48.3
L21	6200007911	S.COI ELJRF 18NJFB	B	66.3/51.2
L22	6200005721	S.COI ELJRE 33NGFA	B	40.6/48.1
L23	6200005721	S.COI ELJRE 33NGFA	B	45.5/48.1
L24	6130003000	S.COI #617DB-1714=P3	B	27/36.2
L25	6200009151	S.COI ELJRE 82NJFA	B	54.2/53.4
L26	6200010720	S.COI C2520C-56NG-A	B	20.9/37
L27	6200009181	S.COI ELJRE R10JFA	B	66.5/69.4
L28	6200010720	S.COI C2520C-56NG-A	B	11.7/35.1
L29	6200009171	S.COI ELJRE 47NJFA	B	70.5/70.8
L30	6200009171	S.COI ELJRE 47NJFA	T	72.6/72.7
L31	6200011410	S.COI C2520C-82NG-A	B	7.8/41.5
L32	6200011410	S.COI C2520C-82NG-A	B	9.9/50.6
L33	6200010050	S.COI AS080547-47N	T	33.3/73.9
L34	6200007750	S.COI LQW2BHN56NJ03L	B	13.2/51.7
L35	6200006991	S.COI ELJRE 56NGFA	B	20.1/50.7
L36	6200010420	S.COI FHW1210HC 1R0JGT <JJE>	B	39.2/66
L37	6200010050	S.COI AS080547-47N	T	30/58.5
L38	6200010050	S.COI AS080547-47N	T	21.6/58
L39	6200010050	S.COI AS080547-47N	T	12.5/57.5
L40	6200010050	S.COI AS080547-47N	T	10.5/81
L41	6200002861	S.COI NLV25T-4R7J	T	122.3/54.4
L42	6200005011	S.COI NLV25T-100J	T	40.7/42.1
L43	6200010680	S.COI C2520C-R22G-A (0.22U)	T	42.1/34.9
L44	6200010740	S.COI C2520C-R27G-A	T	37.8/35.3
L45	6200003960	S.COI MLF1608A 1R0K-T	T	71.3/72.7
L46	6200005661	S.COI ELJRE 10NGFA	T	78.3/42.3
L47	6200004480	S.COI MLF1608D R82K-T	T	23.3/20.9
L48	6200007750	S.COI LQW2BHN56NJ03L	B	23.9/39.8
L49	6200009571	S.COI ELJRE R12GFA [B]	B	6.6/36.3
	6200009571	S.COI ELJRE R12GFA [G]		
	6200009571	S.COI ELJRE R12GFA [J]		
	6200009571	S.COI ELJRE R12GFA [H]		
	6200009571	S.COI ELJRE R12GFA [I]		
R1	7030005060	S.RES ERJ2GEJ 333 X (33K)	B	38.1/5.8
R2	7510001730	S.THE ERTJOEP 473J	T	88.9/34.2
R3	7030005050	S.RES ERJ2GEJ 103 X (10K)	T	79/11.9
R4	7030005700	S.RES ERJ2GEJ 274 X (270K)	B	88.5/18.9
R5	7030005090	S.RES ERJ2GEJ 104 X (100K)	T	88.9/32.3
R6	7030005160	S.RES ERJ2GEJ 105 X (1M)	T	84/19.4
R7	7030005230	S.RES ERJ2GEJ 334 X (330K)	T	84/17.5
R8	7410001130	S.ARR EXB28V102JX	T	86.1/52.4
R9	7030007570	S.RES ERJ2GEJ 122 X (1.2K)	B	34.3/11.6
R10	7030007060	S.RES ERJ2GEJ 684X (680K)	B	35.8/13.7
R11	7030010040	S.RES ERJ2GEJ-JPW	T	8.4/9.2
R12	7030004970	S.RES ERJ2GEJ 470 X (47)	T	31/17.2
R13	7030005600	S.RES ERJ2GEJ 273 X (27K)	T	8.8/15.9
R14	7030005210	S.RES ERJ2GEJ 822 X (8.2K)	T	7.5/7.4
R15	7030005070	S.RES ERJ2GEJ 683 X (68K)	B	93.3/14.4
R17	7030007570	S.RES ERJ2GEJ 122 X (1.2K)	B	93.3/15.3
R18	7030008300	S.RES ERJ2GEJ 184 X (180K)	B	79/11.8
R19	7030005230	S.RES ERJ2GEJ 334 X (330K)	T	89.3/9
R20	7030005090	S.RES ERJ2GEJ 104 X (100K)	T	85.6/8.3
R21	7030005070	S.RES ERJ2GEJ 683 X (68K)	T	86.6/8.3
R22	7030005050	S.RES ERJ2GEJ 103 X (10K)	B	38.1/7.5
R23	7030005050	S.RES ERJ2GEJ 103 X (10K)	B	38.1/9.2
R24	7030005060	S.RES ERJ2GEJ 333 X (33K)	B	37.2/10.5
R25	7030005120	S.RES ERJ2GEJ 102 X (1K)	B	100.9/51.4
R26	7030004980	S.RES ERJ2GEJ 101 X (100)	B	87.5/5.3
R27	7030007300	S.RES ERJ2GEJ 332 X (3.3K)	T	53.9/5.6
R28	7030010040	S.RES ERJ2GEJ-JPW	T	59.4/5.6
R29	7030005530	S.RES ERJ2GEJ 100 X (10)	T	116.4/14.5
R30	7030005170	S.RES ERJ2GEJ 474 X (470K)	B	37.2/9.2
R31	7030008410	S.RES ERJ2GEJ 392 X (3.9K)	B	36.3/9.2
R32	7030007340	S.RES ERJ2GEJ 153 X (15K)	B	37.2/7.5
R33	7030005160	S.RES ERJ2GEJ 105 X (1M)	T	80.7/8.4
R34	7030005040	S.RES ERJ2GEJ 472 X (4.7K)	T	80.7/7.2
R35	7030005120	S.RES ERJ2GEJ 102 X (1K)	T	77.6/9.5
R36	7030005030	S.RES ERJ2GEJ 152 X (1.5K)	B	27/14.7
R37	7030007300	S.RES ERJ2GEJ 332 X (3.3K)	B	15.2/8.6
R38	7030005210	S.RES ERJ2GEJ 822 X (8.2K)	T	22.9/6.2
R39	7030005600	S.RES ERJ2GEJ 273 X (27K)	T	24/9.1
R40	7030005170	S.RES ERJ2GEJ 474 X (470K)	T	25.9/10.6
R42	7030005090	S.RES ERJ2GEJ 104 X (100K)	B	94.8/11.7
R43	7030007300	S.RES ERJ2GEJ 332 X (3.3K)	B	94.8/10
R44	7030007340	S.RES ERJ2GEJ 153 X (15K)	B	90.7/11.9
R45	7030005220	S.RES ERJ2GEJ 223 X (22K)	B	92.8/10
R46	7030005040	S.RES ERJ2GEJ 472 X (4.7K)	T	92.1/14.1
R47	7030005050	S.RES ERJ2GEJ 103 X (10K)	T	92.1/13.1
R48	7030005060	S.RES ERJ2GEJ 333 X (33K)	B	50.9/8.6
R49	7030005160	S.RES ERJ2GEJ 105 X (1M)	B	49.7/13.7
R50	7030005090	S.RES ERJ2GEJ 104 X (100K)	B	49.7/11
R51	7030005290	S.RES ERJ2GEJ 682 X (6.8K)	T	52.4/7
R52	7030007340	S.RES ERJ2GEJ 153 X (15K)	T	59.1/12.5
R53	7030005000	S.RES ERJ2GEJ 471 X (470)	T	86.2/37.7
R54	7030010040	S.RES ERJ2GEJ-JPW	B	78.7/36.4
R55	7030005290	S.RES ERJ2GEJ 682 X (6.8K)	T	81.8/25.3
R56	7030005040	S.RES ERJ2GEJ 472 X (4.7K)	B	77.7/48.4
R57	7030005090	S.RES ERJ2GEJ 104 X (100K)	B	28.3/14.3
R58	7030005050	S.RES ERJ2GEJ 103 X (10K)	T	27.6/9
R59	7030005170	S.RES ERJ2GEJ 474 X (470K)	T	27.6/8.1
R60	7030005000	S.RES ERJ2GEJ 471 X (470)	T	30.9/10.2
R61	7030005040	S.RES ERJ2GEJ 472 X (4.7K)	T	28.8/8.5
R63	7030005220	S.RES ERJ2GEJ 223 X (22K)	B	92.8/8.3
R64	7030005220	S.RES ERJ2GEJ 223 X (22K)	B	92.8/6.5
R65	7030005090	S.RES ERJ2GEJ 104 X (100K)	B	50.9/9.5
R66	7030005050	S.RES ERJ2GEJ 103 X (10K)	T	86.6/11.8
R67	7030005290	S.RES ERJ2GEJ 682 X (6.8K)	T	53.4/7
R68	7030007290	S.RES ERJ2GEJ 222 X (2.2K)	B	53.7/17.9
R69	7030010040	S.RES ERJ2GEJ-JPW	T	85.6/13.6

M.=Mounted side (T: Mounted on the Top side, B: Mounted on the Bottom side)
S.=Surface mount

[MAIN-A UNIT] (MDC compatible)

REF NO.	PARTS NO.	DESCRIPTION	M.	H/V LOCATION
R71	7030005090	S.RES ERJ2GEJ 104 X (100K)	T	57.7/6.3
R72	7030007290	S.RES ERJ2GEJ 222 X (2.2K)	T	64.9/55.6
R73	7030005000	S.RES ERJ2GEJ 471 X (470)	B	83.2/26.9
R74	7030007300	S.RES ERJ2GEJ 332 X (3.3K)	B	81.8/25.3
R75	7030009140	S.RES ERJ2GEJ 272 X (2.7K)	B	79.2/34
R76	7030007340	S.RES ERJ2GEJ 153 X (15K)	B	80.3/29.1
R77	7030005580	S.RES ERJ2GEJ 560 X (56)	T	78.2/47.2
R78	7030005070	S.RES ERJ2GEJ 683 X (68K)	B	81.5/34
R79	7030005040	S.RES ERJ2GEJ 472 X (4.7K)	B	74.8/50
R80	7030005040	S.RES ERJ2GEJ 472 X (4.7K)	B	70/50.9
R81	7030005110	S.RES ERJ2GEJ 224 X (220K)	B	55.5/31.4
R82	7030005110	S.RES ERJ2GEJ 224 X (220K)	B	66.3/33.3
R83	7030008400	S.RES ERJ2GEJ 182 X (1.8K)	T	32.6/10.2
R85	7030005110	S.RES ERJ2GEJ 224 X (220K)	T	25.1/20.7
R87	7030007300	S.RES ERJ2GEJ 332 X (3.3K)	T	32.2/20.6
R88	7030005120	S.RES ERJ2GEJ 102 X (1K)	B	91.7/6.5
R90	7030005000	S.RES ERJ2GEJ 471 X (470)	B	89.4/18.9
R91	7030005700	S.RES ERJ2GEJ 274 X (270K)	T	85.6/11.8
R92	7030005090	S.RES ERJ2GEJ 104 X (100K)	T	87.3/13.4
R93	7030005310	S.RES ERJ2GEJ 124 X (120K)	T	83.9/8.2
R94	7030005080	S.RES ERJ2GEJ 823 X (82K)	T	108/34.7
R95	7030005720	S.RES ERJ2GEJ 563 X (56K)	T	108/33.8
R96	7030005240	S.RES ERJ2GEJ 473 X (47K)	B	63.7/15.5
R97	7030005060	S.RES ERJ2GEJ 333 X (33K)	B	53.3/16.6
R98	7030005030	S.RES ERJ2GEJ 152 X (1.5K)	B	62.1/19.4
R99	7030005240	S.RES ERJ2GEJ 473 X (47K)	B	60.2/19.4
R100	7030005030	S.RES ERJ2GEJ 152 X (1.5K)	B	77.9/34.4
R101	7030008280	S.RES ERJ2GEJ 271 X (270)	B	79.2/29.1
R102	7030005530	S.RES ERJ2GEJ 100 X (10)	T	23/22.9
R103	7030005600	S.RES ERJ2GEJ 273 X (27K)	B	29.9/23.8
R104	7030007280	S.RES ERJ2GEJ 331 X (330)	T	26.9/22.6
R105	7030005600	S.RES ERJ2GEJ 273 X (27K)	B	30.9/23.8
R106	7030007270	S.RES ERJ2GEJ 151 X (150)	T	34.3/22.5
R107	7030007340	S.RES ERJ2GEJ 153 X (15K)	B	129.7/52.3
R108	7030005240	S.RES ERJ2GEJ 473 X (47K)	B	82.3/18.9
R109	7030005700	S.RES ERJ2GEJ 274 X (270K)	B	81.3/18.9
R110	7030005050	S.RES ERJ2GEJ 103 X (10K)	T	78.4/20.2
R111	7030005050	S.RES ERJ2GEJ 103 X (10K)	T	95.9/28.3
R112	7030005700	S.RES ERJ2GEJ 274 X (270K)	T	80.8/20.1
R113	7030005240	S.RES ERJ2GEJ 473 X (47K)	B	57.9/19.4
R114	7030005090	S.RES ERJ2GEJ 104 X (100K)	B	53.7/13.3
R115	7030005090	S.RES ERJ2GEJ 104 X (100K)	T	114.4/18.4
R116	7030005090	S.RES ERJ2GEJ 104 X (100K)	B	85.3/7.3
R118	7030006610	S.RES ERJ2GEJ 394 X (390K)	T	89.5/11.7
R120	7030009280	S.RES ERJ2GEJ 391 X	T	30.3/34.3
R122	7030005600	S.RES ERJ2GEJ 273 X (27K)	T	32.3/35.2
R123	7030005600	S.RES ERJ2GEJ 273 X (27K)	T	33.5/35.2
R125	7030007270	S.RES ERJ2GEJ 151 X (150)	T	35/34
R127	7030005050	S.RES ERJ2GEJ 103 X (10K)	B	79.1/18.3
R128	7030008290	S.RES ERJ2GEJ 183 X (18K)	T	112.1/45.1
R129	7030005040	S.RES ERJ2GEJ 472 X (4.7K)	T	112.1/44.1
R130	7030005070	S.RES ERJ2GEJ 683 X (68K)	T	104.9/43.2
R131	7030005070	S.RES ERJ2GEJ 683 X (68K)	T	104.9/44.1
R132	7030004980	S.RES ERJ2GEJ 101 X (100)	T	114.4/17.5
R134	7030005160	S.RES ERJ2GEJ 105 X (1M)	T	128.9/26.3
R135	7030005160	S.RES ERJ2GEJ 105 X (1M)	T	128.9/25.3
R136	7030005160	S.RES ERJ2GEJ 105 X (1M)	T	128.9/24.2
R139	7410001140	S.ARR EXB28V104JX	T	130.6/20.6
R140	7030011000	S.RES RR0510P-392-D (3.9K)	T	48.1/47.2
R141	7030008340	S.RES RR0510P-182-D (1.8K)	T	50.8/45.4
R142	7030010040	S.RES ERJ2GEJ-JPW	T	49/47.2
R143	7030011000	S.RES RR0510P-392-D (3.9K)	T	58.7/42.2
R144	7030008340	S.RES RR0510P-182-D (1.8K)	T	61.7/40.4
R145	7030010040	S.RES ERJ2GEJ-JPW	T	59.6/42.2
R146	7030011000	S.RES RR0510P-392-D (3.9K)	T	71.8/45.8
R147	7030008340	S.RES RR0510P-182-D (1.8K)	T	70/41.9
R148	7030010040	S.RES ERJ2GEJ-JPW	T	71.8/44.9
R149	7030005310	S.RES ERJ2GEJ 124 X (120K)	T	69.1/36.3
R150	7030005240	S.RES ERJ2GEJ 473 X (47K)	T	89.8/15.5
R151	7030005060	S.RES ERJ2GEJ 333 X (33K)	T	91/16.1
R152	7030005090	S.RES ERJ2GEJ 104 X (100K)	T	88.9/16.4
R153	7030007300	S.RES ERJ2GEJ 332 X (3.3K)	T	39.9/32.2
R154	7030004970	S.RES ERJ2GEJ 470 X (47)	T	42.9/40.1
R155	7030005120	S.RES ERJ2GEJ 102 X (1K)	T	41.7/32.4
R156	7030004970	S.RES ERJ2GEJ 470 X (47)	T	42.5/41.3
R157	7030005090	S.RES ERJ2GEJ 104 X (100K)	B	33.7/23.6
R158	7030005240	S.RES ERJ2GEJ 473 X (47K)	T	112.1/42.3
R159	7030005240	S.RES ERJ2GEJ 473 X (47K)	T	112.1/40.5
R160	7030005240	S.RES ERJ2GEJ 473 X (47K)	T	113.8/38.7
R161	7030005070	S.RES ERJ2GEJ 683 X (68K)	T	104.9/46.8
R162	7030005240	S.RES ERJ2GEJ 473 X (47K)	T	128.2/14.4
R163	7030005240	S.RES ERJ2GEJ 473 X (47K)	T	128.7/16.3
R164	7030005240	S.RES ERJ2GEJ 473 X (47K)	T	129.4/14.4
R165	7030005230	S.RES ERJ2GEJ 334 X (330K)	T	128.7/17.8
R166	7030005230	S.RES ERJ2GEJ 334 X (330K)	T	128.7/18.7
R167	7030005230	S.RES ERJ2GEJ 334 X (330K)	T	129.8/16.2
R168	7030006581	S.RES ERA3YED 122V (1.2K)	T	53.6/47.5
R169	7030007230	S.RES ERA3YED 102V (1K)	T	63.8/42.6
R170	7030010390	S.RES ERA3YED 821V (820)	T	74.1/43.2
R171	7030005090	S.RES ERJ2GEJ 104 X (100K)	T	56.3/46.7
R172	7030008280	S.RES ERJ2GEJ 271 X (270)	B	36.4/46.4
R173	7030007270	S.RES ERJ2GEJ 151 X (150)	B	39/31.2
R174	7030004980	S.RES ERJ2GEJ 101 X (100)	B	34.6/38.7
R175	7030004980	S.RES ERJ2GEJ 101 X (100)	B	33/38.7
R176	7030005590	S.RES ERJ2GEJ 680 X (68)	B	31.3/37.4
R177	7030005590	S.RES ERJ2GEJ 680 X (68)	B	31.3/34.9
R178	7030005240	S.RES ERJ2GEJ 473 X (47K)	T	113.8/37.8
R179	7030008300	S.RES ERJ2GEJ 184 X (180K)	T	117.6/34.6
R180	7030005720	S.RES ERJ2GEJ 563 X (56K)	T	118.3/35.3
R181	7030005220	S.RES ERJ2GEJ 223 X (22K)	T	119/36
R182	7030005120	S.RES ERJ2GEJ 102 X (1K)	T	116.9/33.9
R183	7030005070	S.RES ERJ2GEJ 683 X (68K)	T	103.1/46.8
R184	7030005220	S.RES ERJ2GEJ 223 X (22K)	T	113.8/36.9
R185	7030005070	S.RES ERJ2GEJ 683 X (68K)	B	102.3/45.6
R186	7030005160	S.RES ERJ2GEJ 105 X (1M)	T	81.8/18.9

[MAIN-A UNIT] (MDC compatible)

REF NO.	PARTS NO.	DESCRIPTION	M.	H/V LOCATION
R187	7030005060	S.RES ERJ2GEJ 333 X (33K)	T	80.6/17.5
R188	7030005090	S.RES ERJ2GEJ 104 X (100K)	T	78.5/14.9
R189	7030005720	S.RES ERJ2GEJ 563 X (56K)	T	78.5/15.8
R190	7030005240	S.RES ERJ2GEJ 473 X (47K)	T	80.6/18.4
R191	7030004980	S.RES ERJ2GEJ 101 X (100)	T	60.5/47
R192	7030004980	S.RES ERJ2GEJ 101 X (100)	B	66.3/53.2
R193	7030005050	S.RES ERJ2GEJ 103 X (10K)	B	66.3/45.2
R194	7030005110	S.RES ERJ2GEJ 224 X (220K)	B	62.7/50.8
R195	7030009320	S.RES ERJ2GEJ 4R7 X (4.7)	B	55.8/50.3
R196	7030005120	S.RES ERJ2GEJ 102 X (1K)	B	65.2/42.8
R197	7030005050	S.RES ERJ2GEJ 103 X (10K)	B	64.7/44.5
R198	7030010090	S.RES ERJ2GEJ 180 X (18)	B	36/47.6
R199	7030008280	S.RES ERJ2GEJ 271 X (270)	B	37.3/47.6
R200	7030005050	S.RES ERJ2GEJ 103 X (10K)	B	8.4/20.6
R201	7410001130	S.ARR EXB28V102JX	B	117/51.7
R202	7030005090	S.RES ERJ2GEJ 104 X (100K)	B	122.5/44.8
R203	7030005120	S.RES ERJ2GEJ 102 X (1K)	B	127.4/47.3
R204	7410000750	S.ARR EXB-V4V 104JV (100K)	B	129.6/42.7
R205	7030008010	S.RES ERJ2GEJ 123 X (12K)	T	127.5/40.1
R206	7030005120	S.RES ERJ2GEJ 102 X (1K)	B	127/39.5
R207	7030005050	S.RES ERJ2GEJ 103 X (10K)	T	120.9/37.5
R208	7030005050	S.RES ERJ2GEJ 103 X (10K)	T	121.6/38.2
R209	7410001130	S.ARR EXB28V102JX	B	125.8/40.8
R210	7030008010	S.RES ERJ2GEJ 123 X (12K)	T	124.2/38.4
R211	7030008010	S.RES ERJ2GEJ 123 X (12K)	T	125.9/41.1
R212	7030005160	S.RES ERJ2GEJ 105 X (1M)	T	122.1/41.1
R213	7030005090	S.RES ERJ2GEJ 104 X (100K)	B	55.3/51.8
R214	7030004980	S.RES ERJ2GEJ 101 X (100)	B	56.4/54
R215	7030005050	S.RES ERJ2GEJ 103 X (10K)	B	63.5/61.3
R216	7030005590	S.RES ERJ2GEJ 680 X (68)	B	61.9/62.3
R218	7030010040	S.RES ERJ2GEJ-JPW	B	56.4/51.8
R219	7030005050	S.RES ERJ2GEJ 103 X (10K)	B	46/49.8
R220	7030005040	S.RES ERJ2GEJ 472 X (4.7K)	B	49.3/52
R221	7030005050	S.RES ERJ2GEJ 103 X (10K)	B	44.4/49.8
R222	7030005090	S.RES ERJ2GEJ 104 X (100K)	B	17.7/33.9
R223	7030005090	S.RES ERJ2GEJ 104 X (100K)	B	16.2/33.9
R224	7030005050	S.RES ERJ2GEJ 103 X (10K)	B	15.7/32.7
R225	7030005000	S.RES ERJ2GEJ 471 X (470)	B	8/19.2
R226	7030004980	S.RES ERJ2GEJ 101 X (100)	T	109.7/53.5
R227	7030005090	S.RES ERJ2GEJ 104 X (100K)	B	107.1/49.3
R228	7410001140	S.ARR EXB28V104JX	T	103.3/49
R230	7030005050	S.RES ERJ2GEJ 103 X (10K)	B	124.7/42.7
R232	7030005530	S.RES ERJ2GEJ 100 X (10)	T	120.4/41.1
R233	7410000750	S.ARR EXB-V4V 104JV (100K)	T	130/34.7
R234	7410001130	S.ARR EXB28V102JX	B	129.4/34.4
R236	7030009530	S.RES ERJ2GEJ 270 X (27)	B	63.9/71.5
R237	7030005040	S.RES ERJ2GEJ 472 X (4.7K)	B	65.3/69.7
R238	7030008010	S.RES ERJ2GEJ 123 X (12K)	B	61.9/65.1
R240	7030005570	S.RES ERJ2GEJ 820 X (82)	B	62.4/67.4
R241	7030004980	S.RES ERJ2GEJ 101 X (100)	B	58.5/66
R242	7030004970	S.RES ERJ2GEJ 470 X (47)	T	12/33.1
R243	7030009320	S.RES ERJ2GEJ 4R7 X (4.7)	T	10/36
R244	7030005050	S.RES ERJ2GEJ 103 X (10K) [B]	B	15.1/36.3
	7030004980	S.RES ERJ2GEJ 101 X (100) [F]		
	7030004980	S.RES ERJ2GEJ 101 X (100) [D]		
	7030005050	S.RES ERJ2GEJ 103 X (10K) [G]		
	7030004980	S.RES ERJ2GEJ 101 X (100) [K]		
	7030005050	S.RES ERJ2GEJ 103 X (10K) [J]		
	7030005050	S.RES ERJ2GEJ 103 X (10K) [H]		
	7030005050	S.RES ERJ2GEJ 103 X (10K) [I]		
	7030004980	S.RES ERJ2GEJ 101 X (100) [L]		
R245	7030005530	S.RES ERJ2GEJ 100 X (10)	B	11.9/39.9
R246	7030005090	S.RES ERJ2GEJ 104 X (100K)	B	7.5/38.6
R247	7030004990	S.RES ERJ2GEJ 221 X (220)	B	7.7/36.3
R248	7410001130	S.ARR EXB28V102JX	B	103.9/47.9
R249	7410001130	S.ARR EXB28V102JX	B	123.9/27.6
R250	7410001130	S.ARR EXB28V102JX	B	122.1/25.7
R251	7410001140	S.ARR EXB28V104JX	T	124.7/28.7
R252	7410001140	S.ARR EXB28V104JX	T	122.1/25.7
R253	7030008290	S.RES ERJ2GEJ 183 X (18K)	T	9.5/40.5
R254	7030005050	S.RES ERJ2GEJ 103 X (10K)	T	7.4/42.2
R255	7030005310	S.RES ERJ2GEJ 124 X (120K)	B	6.6/38.6
R257	7030008400	S.RES ERJ2GEJ 182 X (1.8K)	T	9/42.2
R258	7030005170	S.RES ERJ2GEJ 474 X (470K)	T	11/44.5
R259	7030005090	S.RES ERJ2GEJ 104 X (100K)	B	6/45.1
R260	7030005090	S.RES ERJ2GEJ 104 X (100K)	B	6/47
R261	7410001130	S.ARR EXB28V102JX	B	99.7/43.5
R262	7410001130	S.ARR EXB28V102JX	T	100.2/37.4
R263	7410001130	S.ARR EXB28V102JX	B	97/40.7
R264	7410001140	S.ARR EXB28V104JX	T	103.8/37
R265	7030005050	S.RES ERJ2GEJ 103 X (10K)	T	105.2/38.2
R266	7410001130	S.ARR EXB28V102JX	B	120.1/23.5
R267	7410001130	S.ARR EXB28V102JX	B	118.3/21.7
R268	7410001130	S.ARR EXB28V102JX	B	116.5/19.9
R269	7030005090	S.RES ERJ2GEJ 104 X (100K)	T	119.4/20.8
R271	7030004980	S.RES ERJ2GEJ 101 X (100)	T	77.6/78.5
R272	7030007280	S.RES ERJ2GEJ 331 X (330)	T	61/76.5
R273	7030005050	S.RES ERJ2GEJ 103 X (10K) [F]	T	62.3/76.1
	7030005050	S.RES ERJ2GEJ 103 X (10K) [D]		
	7030005050	S.RES ERJ2GEJ 103 X (10K) [K]		
	7030005050	S.RES ERJ2GEJ 103 X (10K) [L]		
R274	7030004980	S.RES ERJ2GEJ 101 X (100)	T	56.7/69.3
R275	7030005030	S.RES ERJ2GEJ 152 X (1.5K)	T	64.8/73.8
R276	7030007300	S.RES ERJ2GEJ 332 X (3.3K) [B]	T	65.8/73.8
	7030005040	S.RES ERJ2GEJ 472 X (4.7K) [F]		
	7030005040	S.RES ERJ2GEJ 472 X (4.7K) [D]		
	7030007300	S.RES ERJ2GEJ 332 X (3.3K) [G]		
	7030005040	S.RES ERJ2GEJ 472 X (4.7K) [K]		
	7030007300	S.RES ERJ2GEJ 332 X (3.3K) [J]		
	7030007300	S.RES ERJ2GEJ 332 X (3.3K) [H]		
	7030007300	S.RES ERJ2GEJ 332 X (3.3K) [I]		
	7030005040	S.RES ERJ2GEJ 472 X (4.7K) [L]		
R277	7030005050	S.RES ERJ2GEJ 103 X (10K)	B	4.8/45.6
R278	7030005050	S.RES ERJ2GEJ 103 X (10K)	T	132.2/29.9
R279	7030005090	S.RES ERJ2GEJ 104 X (100K)	T	131.3/29.9

M.=Mounted side (T: Mounted on the Top side, B: Mounted on the Bottom side)
S.=Surface mount

[MAIN-A UNIT] (MDC compatible)

REF NO.	PARTS NO.	DESCRIPTION		M.	H/V LOCATION
R280	7410001130	S.ARR EXB28V102JX		B	95.2/38.9
R281	7030005090	S.RES ERJ2GEJ 104 X (100K)		T	93.7/48.8
R282	7410000750	S.ARR EXB-V4V 104JV (100K)		T	97.2/45.3
R283	7410001130	S.ARR EXB28V102JX		T	103.1/21.7
R284	7030005120	S.RES ERJ2GEJ 102 X (1K)		T	111.2/25.1
R285	7410001130	S.ARR EXB28V102JX		B	107.1/19.9
R286	7410001140	S.ARR EXB28V104JX		T	121.7/22.2
R287	7030005580	S.RES ERJ2GEJ 560 X (56)	[B]	T	55.7/72.6
	7030004990	S.RES ERJ2GEJ 221 X (220)	[F]		
	7030004990	S.RES ERJ2GEJ 221 X (220)	[D]		
	7030005580	S.RES ERJ2GEJ 560 X (56)	[G]		
	7030004990	S.RES ERJ2GEJ 221 X (220)	[K]		
	7030005580	S.RES ERJ2GEJ 560 X (56)	[J]		
	7030005580	S.RES ERJ2GEJ 560 X (56)	[H]		
	7030005580	S.RES ERJ2GEJ 560 X (56)	[I]		
	7030004990	S.RES ERJ2GEJ 221 X (220)	[L]		
R288	7030005100	S.RES ERJ2GEJ 154 X (150K)		T	54.1/68.2
R289	7030005170	S.RES ERJ2GEJ 474 X (470K)	[B]	B	38/63.7
	7030005170	S.RES ERJ2GEJ 474 X (470K)	[G]		
	7030005170	S.RES ERJ2GEJ 474 X (470K)	[J]		
	7030005170	S.RES ERJ2GEJ 474 X (470K)	[H]		
	7030005170	S.RES ERJ2GEJ 474 X (470K)	[I]		
R290	7520000261	S.POS PRF18BB471QB5RB	[B]	T	33.9/63
	7520000261	S.POS PRF18BB471QB5RB	[G]		
	7520000261	S.POS PRF18BB471QB5RB	[J]		
	7520000261	S.POS PRF18BB471QB5RB	[H]		
	7520000261	S.POS PRF18BB471QB5RB	[I]		
R291	7030005120	S.RES ERJ2GEJ 102 X (1K)		T	109.2/24.5
R292	7030006070	S.RES ERJ12YJ101U (100)		B	43.6/66.1
R293	7030005120	S.RES ERJ2GEJ 102 X (1K)		T	50.6/70.5
R294	7030005050	S.RES ERJ2GEJ 103 X (10K)		T	51.7/68.2
R295	7030008290	S.RES ERJ2GEJ 183 X (18K)		T	50.6/71.4
R296	7030005040	S.RES ERJ2GEJ 472 X (4.7K)		T	53.8/64.2
R297	7030008010	S.RES ERJ2GEJ 123 X (12K)		T	50.5/68.6
R298	7030005090	S.RES ERJ2GEJ 104 X (100K)		T	45.6/69.9
R300	7030005050	S.RES ERJ2GEJ 103 X (10K)		B	99.9/59.6
R301	7030007290	S.RES ERJ2GEJ 222 X (2.2K)		T	106.6/55
R302	7030000480	S.RES MCR10EZHJ 6.8K (682)		T	79/64.4
R303	7030000480	S.RES MCR10EZHJ 6.8K (682)		T	80.9/64.4
R304	7030000440	S.RES MCR10EZHJ 3.3K (332)		T	82.8/64.4
R305	7030005050	S.RES ERJ2GEJ 103 X (10K)		T	40.3/19.4
R306	7030005040	S.RES ERJ2GEJ 472 X (4.7K)		T	41/21.7
R307	7030005050	S.RES ERJ2GEJ 103 X (10K)		B	27/63
R309	7030005070	S.RES ERJ2GEJ 683 X (68K)		T	89.9/7.2
R310	7030004980	S.RES ERJ2GEJ 101 X (100)		B	109.3/62.8
R311	7030000220	S.RES MCR10EZHJ 47 (470)		B	15/76.9
R312	7030005700	S.RES ERJ2GEJ 274 X (270K)		B	31.5/62.4
R313	7030003370	S.RES ERJ3GEYJ 271 V (270)		B	8.6/54
R314	7030005600	S.RES ERJ2GEJ 273 X (27K)		B	3/53
R315	7030000220	S.RES MCR10EZHJ 47 (470)		B	3.5/57.4
R316	7030005230	S.RES ERJ2GEJ 334 X (330K)		T	90.8/11.3
R317	7030005160	S.RES ERJ2GEJ 105 X (1M)		B	108.3/83.7
R318	7030005160	S.RES ERJ2GEJ 105 X (1M)		B	112.5/82.7
R319	7030005120	S.RES ERJ2GEJ 102 X (1K)		B	112.1/81.5
R320	7030005160	S.RES ERJ2GEJ 105 X (1M)		B	107.2/82.4
R321	7030004970	S.RES ERJ2GEJ 470 X (47)		B	108.4/82
R322	7030005600	S.RES ERJ2GEJ 273 X (27K)		B	2.1/79.2
R323	7030003370	S.RES ERJ3GEYJ 271 V (270)		B	6.3/78.7
R324	7030000620	S.RES MCR10EZHJ 100 K (104)		B	5.6/85.5
R325	7030005050	S.RES ERJ2GEJ 103 X (10K)		B	130.5/45.2
R326	7030005090	S.RES ERJ2GEJ 104 X (100K)		B	131.8/51.7
R327	7030005120	S.RES ERJ2GEJ 102 X (1K)		B	131.1/54.2
R328	7030005090	S.RES ERJ2GEJ 104 X (100K)		B	134.2/51.7
R332	7030005090	S.RES ERJ2GEJ 104 X (100K)		T	109.6/27.9
R333	7030005120	S.RES ERJ2GEJ 102 X (1K)		T	109.6/26.9
R334	7520000270	S.POS PRG21BC4R7MM1RA		T	101.4/79.7
R335	7030005050	S.RES ERJ2GEJ 103 X (10K)		T	101.8/83.9
R336	7030005120	S.RES ERJ2GEJ 102 X (1K)		T	111.3/78.5
R337	7410001130	S.ARR EXB28V102JX		T	104.6/75.9
R338	7030005651	S.RES ERA3YKD 304V (300K)		T	113.6/54.3
R339	7030005871	S.RES ERA3YKD 104V (100K)		T	113.6/52.9
R340	7030003560	S.RES ERJ3GEYJ 103 V (10K)		T	136.3/65.7
R341	7030003560	S.RES ERJ3GEYJ 103 V (10K)		B	130.7/85.9
R342	7030005090	S.RES ERJ2GEJ 104 X (100K)		B	135.4/52.2
R343	7030007290	S.RES ERJ2GEJ 222 X (2.2K)		B	138.2/49.4
R344	7030008270	S.RES RR0510P-104-D (100K)		B	133.3/54.6
R345	7030008270	S.RES RR0510P-104-D (100K)		B	133.3/56.3
R346	7030008410	S.RES ERJ2GEJ 392 X (3.9K)		B	137/52.2
R347	7030005050	S.RES ERJ2GEJ 103 X (10K)		B	137.8/53.7
R348	7030005700	S.RES ERJ2GEJ 274 X (270K)		B	131/75.5
R349	7030005090	S.RES ERJ2GEJ 104 X (100K)		B	129.8/76.5
R350	7030005120	S.RES ERJ2GEJ 102 X (1K)		B	139.1/47.8
R351	7030004980	S.RES ERJ2GEJ 101 X (100)		B	136.3/38.1
R352	7030008300	S.RES ERJ2GEJ 184 X (180K)		B	139.7/39
R353	7030005230	S.RES ERJ2GEJ 334 X (330K)		B	138.2/47.8
R354	7030010040	S.RES ERJ2GEJ-JPW		T	140.4/36
R355	7030008280	S.RES ERJ2GEJ 271 X (270)		B	139.7/34.3
R356	7540000290	ABS ERZV10D220			
R359	7030005090	S.RES ERJ2GEJ 104 X (100K)		B	114.8/82.9
R360	7030005090	S.RES ERJ2GEJ 104 X (100K)		T	80.6/5.3
R361	7030005600	S.RES ERJ2GEJ 273 X (27K)		T	78.4/5.3
R362	7030005050	S.RES ERJ2GEJ 103 X (10K)		T	124.8/50.2
R363	7030005120	S.RES ERJ2GEJ 102 X (1K)		T	42.9/38.3
R364	7030009140	S.RES ERJ2GEJ 272 X (2.7K)		T	42.9/37.4
R365	7030004970	S.RES ERJ2GEJ 470 X (47)		T	38.3/37.9
R366	7030005090	S.RES ERJ2GEJ 104 X (100K)		B	131.4/63.4
R367	7030005040	S.RES ERJ2GEJ 472 X (4.7K)	[B]	B	130.1/63
	7030005040	S.RES ERJ2GEJ 472 X (4.7K)	[F]		
	7030005040	S.RES ERJ2GEJ 472 X (4.7K)	[D]		
	7030005040	S.RES ERJ2GEJ 472 X (4.7K)	[G]		
	7030005040	S.RES ERJ2GEJ 472 X (4.7K)	[K]		
	7030005040	S.RES ERJ2GEJ 472 X (4.7K)	[J]		
	7030005040	S.RES ERJ2GEJ 472 X (4.7K)	[H]		
	7030005000	S.RES ERJ2GEJ 471 X (470)	[I]		
	7030005040	S.RES ERJ2GEJ 472 X (4.7K)	[L]		

[MAIN-A UNIT] (MDC compatible)

REF NO.	PARTS NO.	DESCRIPTION	M.	H/V LOCATION
R368	7030005050	S.RES ERJ2GEJ 103 X (10K)	T	78.3/7.6
R370	7030005010	S.RES ERJ2GEJ 681 X (680)	T	71.2/70.4
R371	7030005050	S.RES ERJ2GEJ 103 X (10K)	T	119.5/84.6
R372	7030005040	S.RES ERJ2GEJ 472 X (4.7K)	T	25.9/8.1
R373	7030005040	S.RES ERJ2GEJ 472 X (4.7K)	T	74/21.6
R375	7030005030	S.RES ERJ2GEJ 152 X (1.5K)	T	27.6/5.3
R376	7030005160	S.RES ERJ2GEJ 105 X (1M)	B	109.1/12.1
R377	7030005160	S.RES ERJ2GEJ 105 X (1M)	B	110.9/12.1
R378	7410001140	S.ARR EXB28V104JX	B	100.7/18.3
R379	7030005090	S.RES ERJ2GEJ 104 X (100K)	T	111.6/23.8
R386	7030005120	S.RES ERJ2GEJ 102 X (1K)	T	105.8/85.1
R387	7030005120	S.RES ERJ2GEJ 102 X (1K)	T	107.8/85.1
R389	7030005090	S.RES ERJ2GEJ 104 X (100K)	T	110.4/10.7
R390	7030008300	S.RES ERJ2GEJ 184 X (180K)	B	23/10.5
R391	7030005120	S.RES ERJ2GEJ 102 X (1K)	B	23.9/7.3
R392	7030008400	S.RES ERJ2GEJ 182 X (1.8K)	B	29.2/5.6
R393	7030004980	S.RES ERJ2GEJ 101 X (100)	B	28.3/7.3
R394	7030004980	S.RES ERJ2GEJ 101 X (100)	B	23/8.9
R395	7030005290	S.RES ERJ2GEJ 682 X (6.8K)	B	22.1/7.3
R396	7030009290	S.RES ERJ2GEJ 562 X (5.6K)	B	22.1/5.6
R397	7030005120	S.RES ERJ2GEJ 102 X (1K)	B	79.8/46.1
R398	7030005120	S.RES ERJ2GEJ 102 X (1K)	T	79.3/41.3
R399	7030005050	S.RES ERJ2GEJ 103 X (10K)	B	95.8/10
R400	7030005030	S.RES ERJ2GEJ 152 X (1.5K)	B	23/5.6
R402	7030005170	S.RES ERJ2GEJ 474 X (470K)	T	102.5/45.3
R403	7030010040	S.RES ERJ2GEJ-JPW	T	106.2/56.2
R404	7030005110	S.RES ERJ2GEJ 224 X (220K)	T	103.6/43.8
C1	4030017420	S.CER C1005 CH 1H 470J-T	T	88.9/54.3
C2	4030017420	S.CER C1005 CH 1H 470J-T	T	89.9/54.3
C3	4030017420	S.CER C1005 CH 1H 470J-T	T	41.5/15.4
C4	4030017420	S.CER C1005 CH 1H 470J-T	B	50/15
C5	4030017460	S.CER C1005 JB 1H 102K-T	T	88/32.3
C6	4550007080	S.TAN TEESVA 1C 106M8R	T	80.8/55.1
C8	4030017420	S.CER C1005 CH 1H 470J-T	T	89.9/52
C9	4030016930	S.CER C1005 JB 1A 104K-T	T	88.9/52
C10	4030016930	S.CER C1005 JB 1A 104K-T	T	80.6/50.7
C11	4030016930	S.CER C1005 JB 1A 104K-T	T	10.9/18.8
C12	4030016930	S.CER C1005 JB 1A 104K-T	T	8.5/7.4
C13	4030016930	S.CER C1005 JB 1A 104K-T	T	85.6/10
C14	4030016930	S.CER C1005 JB 1A 104K-T	T	86.6/10
C15	4030017460	S.CER C1005 JB 1H 102K-T	T	41.5/7.7
C16	4550000460	S.TAN TEESVA 1C 105M8R	T	42.7/6.2
C17	4550000460	S.TAN TEESVA 1C 105M8R	B	42.7/6.2
C18	4030017420	S.CER C1005 CH 1H 470J-T	T	41.5/14.5
C19	4030017420	S.CER C1005 CH 1H 470J-T	B	50/15.9
C20	4030016970	S.CER C1005 JB 1E 223K-T	B	100.9/52.3
C21	4030017420	S.CER C1005 CH 1H 470J-T	T	41.5/13.5
C22	4030017420	S.CER C1005 CH 1H 470J-T	T	41.5/12.6
C23	4030016930	S.CER C1005 JB 1A 104K-T	T	51.8/5.6
C24	4030017660	S.CER C1005 CH 1H 330J-T	B	39.8/9.8
C25	4030017420	S.CER C1005 CH 1H 470J-T	T	61.4/6
C26	4030016930	S.CER C1005 JB 1A 104K-T	B	37.2/5.8
C27	4030018240	S.CER C1005 JB 1H 562K-T	B	36.3/7.5
C28	4030016790	S.CER C1005 JB 1E 103K-T	T	79.3/7.6
C29	4030017460	S.CER C1005 JB 1H 102K-T	T	79/13.6
C30	4030016930	S.CER C1005 JB 1A 104K-T	T	78.1/13.6
C31	4030017460	S.CER C1005 JB 1H 102K-T	T	80.6/51.7
C32	4030017500	S.CER C1005 CH 1H 560J-T	B	33.3/15.9
C33	4030016930	S.CER C1005 JB 1A 104K-T	B	34.8/12.8
C34	4030017570	S.CER C1005 CH 1H 040B-T	B	32.1/15.4
C35	4030017590	S.CER C1005 CH 1H 070C-T	B	30.9/15.9
C36	4030016930	S.CER C1005 JB 1A 104K-T	T	22.4/14.9
C37	4030017360	S.CER C1005 CH 1H 030B-T	B	28.3/15.4
C38	4030016930	S.CER C1005 JB 1A 104K-T	T	22/6.2
C39	4030016930	S.CER C1005 JB 1A 104K-T	B	13.6/6.2
C40	4030016930	S.CER C1005 JB 1A 104K-T	T	23.8/6.2
C41	4030016930	S.CER C1005 JB 1A 104K-T	T	22/12.5
C42	4030016930	S.CER C1005 JB 1A 104K-T	T	23/12.5
C43	4030017680	S.CER C1005 CH 1H 820J-T	T	26.4/9.4
C44	4030017680	S.CER C1005 CH 1H 820J-T	T	25.5/9.4
C45	4030017790	S.CER C1005 JB 1H 682K-T	B	91.7/10
C46	4030016930	S.CER C1005 JB 1A 104K-T	B	93.8/10
C47	4030016970	S.CER C1005 JB 1E 223K-T	T	92.1/15.1
C48	4030017710	S.CER C1005 CH 1H 181J-T	B	49.7/9.1
C49	4550007080	S.TAN TEESVA 1C 106M8R	T	52.1/15.4
C50	4030017460	S.CER C1005 JB 1H 102K-T	T	54.3/12
C51	4030017400	S.CER C1005 CH 1H 220J-T	T	47.8/19
C52	4030017400	S.CER C1005 CH 1H 220J-T	T	44.7/7.8
C53	4030017900	S.CER C1005 JB 1E 123K-T	T	59.1/10.6
C54	4030018080	S.CER C1005 JB 1H 182K-T	T	59.1/11.5
C55	4030016790	S.CER C1005 JB 1E 103K-T	T	64.5/57
C56	4030017620	S.CER C1005 CH 1H 100C-T	T	87.7/35.5
C57	4030016930	S.CER C1005 JB 1A 104K-T	T	80.1/36.7
C58	4030017430	S.CER C1005 CH 1H 101J-T	T	85.2/38.6
C59	4030017460	S.CER C1005 JB 1H 102K-T	T	81.8/24.3
C60	4030017420	S.CER C1005 CH 1H 470J-T	T	82.9/41.5
C63	4030017620	S.CER C1005 CH 1H 100C-T	T	84/39.1
C64	4030017780	S.CER C1005 JB 1H 472K-T	T	81.3/41.3
C65	4030017460	S.CER C1005 JB 1H 102K-T	T	27.6/10.6
C66	4550006050	S.TAN TEESVA 0J 106M8R	T	31.1/6.8
C67	4030017460	S.CER C1005 JB 1H 102K-T	T	27.6/7.1
C68	4030017460	S.CER C1005 JB 1H 102K-T	T	30.5/9
C69	4030017460	S.CER C1005 JB 1H 102K-T	T	32.6/15.4
C70	4030017420	S.CER C1005 CH 1H 470J-T	B	28.3/13.4
C71	4030016940	S.CER C1005 JB 1A 393K-T	B	91.7/8.3
C72	4030018860	S.CER C1005 JB 0J 105K-T	B	50.7/11
C73	4030017750	S.CER C1005 JB 1H 122K-T	B	51.3/16.6
C74	4030016930	S.CER C1005 JB 1A 104K-T	B	52.3/16.6
C75	4030016930	S.CER C1005 JB 1A 104K-T	B	56.2/12.6
C77	4030017460	S.CER C1005 JB 1H 102K-T	B	54.2/16.6
C78	4030017460	S.CER C1005 JB 1H 102K-T	B	53.7/9
C79	4550007080	S.TAN TEESVA 1C 106M8R	T	66.5/55.3
C80	4030017780	S.CER C1005 JB 1H 472K-T	B	79.2/35

M.=Mounted side (T: Mounted on the Top side, B: Mounted on the Bottom side)
S.=Surface mount

[MAIN-A UNIT] (MDC compatible)

REF NO.	PARTS NO.	DESCRIPTION	M.	H/V LOCATION
C81	4030020140	S.CER GRM31MB11E105KA01L	B	82.2/36.4
C82	4030017460	S.CER C1005 JB 1H 102K-T	B	84.1/26.9
C83	4030020140	S.CER GRM31MB11E105KA01L	B	84/32.5
C84	4030017460	S.CER C1005 JB 1H 102K-T	T	78.2/48.8
C85	4030017380	S.CER C1005 CH 1H 050B-T	B	77.1/47.2
C86	4030017350	S.CER C1005 CH 1H 020B-T	B	74.8/48.3
C87	4030017580	S.CER C1005 CH 1H 060C-T	B	73.7/48.3
C88	4030017380	S.CER C1005 CH 1H 050B-T	B	72.4/48.6
C89	4030017580	S.CER C1005 CH 1H 060C-T	B	71.1/49.1
C90	4030017350	S.CER C1005 CH 1H 020B-T	B	70/49.1
C91	4030016790	S.CER C1005 JB 1E 103K-T	T	27.3/17.3
C92	4030017460	S.CER C1005 JB 1H 102K-T	T	25.1/22.4
C93	4030017680	S.CER C1005 CH 1H 820J-T	T	32.6/12.6
C94	4030017460	S.CER C1005 JB 1H 102K-T	B	27.8/12.5
C95	4030016790	S.CER C1005 JB 1E 103K-T	T	28.9/20.1
C98	4030016930	S.CER C1005 JB 1A 104K-T	B	89.3/7.3
C99	4030016930	S.CER C1005 JB 1A 104K-T	B	90.7/14.8
C100	4030016930	S.CER C1005 JB 1A 104K-T	T	87.3/14.3
C101	4030017710	S.CER C1005 CH 1H 181J-T	T	83.9/7.2
C102	4030016930	S.CER C1005 JB 1A 104K-T	T	108/32.8
C103	4030016930	S.CER C1005 JB 1A 104K-T	B	55.3/19.3
C104	4550003250	S.TAN TEESVA 1V 474M8R	B	67.2/24.2
C105	4030017420	S.CER C1005 CH 1H 470J-T	T	49.2/29.4
C106	4030017460	S.CER C1005 JB 1H 102K-T	B	78/29.1
C107	4030016930	S.CER C1005 JB 1A 104K-T	B	54.2/28.8
C109	4550006480	S.TAN TEESVA 1C 475M8R	B	56.1/27.7
C110	4030017420	S.CER C1005 CH 1H 470J-T	T	60.1/27
C111	4030016930	S.CER C1005 JB 1A 104K-T	B	66.3/30.3
C112	4030017460	S.CER C1005 JB 1H 102K-T	B	67.4/30.3
C113	4030017420	S.CER C1005 CH 1H 470J-T	T	72.1/26.6
C114	4030016790	S.CER C1005 JB 1E 103K-T	T	24.2/22.3
C115	4030016790	S.CER C1005 JB 1E 103K-T	T	21.4/22
C116	4030016790	S.CER C1005 JB 1E 103K-T	T	28.5/22.6
C118	4030017640	S.CER C1005 CH 1H 150J-T	T	20.5/28.7
C120	4030016790	S.CER C1005 JB 1E 103K-T	T	32.6/22.5
C122	4030017660	S.CER C1005 CH 1H 330J-T	T	39.8/28.9
C124	4030016930	S.CER C1005 JB 1A 104K-T	B	90.3/18.9
C125	4030017460	S.CER C1005 JB 1H 102K-T	B	128.5/52.6
C126	4030016930	S.CER C1005 JB 1A 104K-T	T	79.6/20.6
C127	4030016930	S.CER C1005 JB 1A 104K-T	B	82.8/20.1
C128	4030016930	S.CER C1005 JB 1A 104K-T	T	78.4/19.3
C129	4030016930	S.CER C1005 JB 1A 104K-T	B	63.7/16.4
C130	4030016930	S.CER C1005 JB 1A 104K-T	B	135.6/25.4
C131	4030017660	S.CER C1005 CH 1H 330J-T	T	135.9/25.7
C132	4030017660	S.CER C1005 CH 1H 330J-T	T	135.9/18
C133	4030018010	S.CER C1005 CH 1H 360J-T	T	48.1/35.5
C134	4030017640	S.CER C1005 CH 1H 150J-T	T	49.4/34.8
C135	4030017660	S.CER C1005 CH 1H 330J-T	T	64.1/32.5
C136	4030017340	S.CER C1005 CH 1H 010B-T	T	71.1/30.8
C137	4030017570	S.CER C1005 CH 1H 040B-T	T	71.1/29.9
C138	4030017730	S.CER C1005 JB 1H 471K-T	T	71.9/33
C139	4030017390	S.CER C1005 CH 1H 180J-T	T	62.1/32
C140	4030017360	S.CER C1005 CH 1H 030B-T	T	72.5/30.7
C141	4030017360	S.CER C1005 CH 1H 030B-T	T	72.1/29
C142	4030018860	S.CER C1005 JB 0J 105K-T	T	89.5/12.7
C143	4030017400	S.CER C1005 CH 1H 220J-T	T	71.3/36.6
C145	4030016790	S.CER C1005 JB 1E 103K-T	T	31.4/35.2
C146	4030017610	S.CER C1005 CH 1H 090C-T	T	35/33.1
C147	4030016790	S.CER C1005 JB 1E 103K-T	T	34.5/35.2
C148	4030016790	S.CER C1005 JB 1E 103K-T	T	30.9/26.4
C149	4030016930	S.CER C1005 JB 1A 104K-T	B	78.2/17.4
C150	4030018560	S.CER C2012 JB 1A 475K-T	B	86.9/19.8
C151	4030016930	S.CER C1005 JB 1A 104K-T	T	112.1/46
C152	4030016930	S.CER C1005 JB 1A 104K-T	T	111.6/34.3
C153	4030017460	S.CER C1005 JB 1H 102K-T	T	111.6/35.2
C154	4030018860	S.CER C1005 JB 0J 105K-T	T	82.7/19.8
C155	4030017420	S.CER C1005 CH 1H 470J-T	T	111.1/38.7
C156	4030017910	S.CER C1005 JB 1H 152K-T	T	104.9/42.3
C157	4030017420	S.CER C1005 CH 1H 470J-T	T	110.8/48.6
C158	4030017430	S.CER C1005 CH 1H 101J-T	T	111.1/37.8
C159	4030017460	S.CER C1005 JB 1H 102K-T	T	120.3/5.5
C160	4030017460	S.CER C1005 JB 1H 102K-T	B	130.6/25.4
C161	4030018010	S.CER C1005 CH 1H 360J-T	T	50.8/43.8
C162	4030017590	S.CER C1005 CH 1H 070C-T	T	52.1/43.4
C163	4030017660	S.CER C1005 CH 1H 330J-T	T	58.7/39.4
C164	4030017660	S.CER C1005 CH 1H 330J-T	T	48.6/45.8
C165	4030017660	S.CER C1005 CH 1H 330J-T	T	49.9/45.4
C166	4030017580	S.CER C1005 CH 1H 060C-T	T	60.1/38.9
C167	4030017420	S.CER C1005 CH 1H 470J-T	T	70/38.9
C168	4030017660	S.CER C1005 CH 1H 330J-T	T	59.1/40.8
C169	4030017660	S.CER C1005 CH 1H 330J-T	T	60.7/40.4
C170	4030017550	S.CER C1005 CH 1H 1R5B-T	T	70.4/36.6
C171	4030017570	S.CER C1005 CH 1H 040B-T	T	70/37.9
C172	4030017400	S.CER C1005 CH 1H 220J-T	T	70/42.9
C173	4030017400	S.CER C1005 CH 1H 220J-T	T	70/43.9
C174	4030017640	S.CER C1005 CH 1H 150J-T	T	38.3/38.8
C175	4030016790	S.CER C1005 JB 1E 103K-T	B	41.4/39.4
C176	4030016930	S.CER C1005 JB 1A 104K-T	B	41/33.2
C177	4030017730	S.CER C1005 JB 1H 471K-T	B	41/32.2
C178	4030016790	S.CER C1005 JB 1E 103K-T	B	34.5/33
C180	4030017740	S.CER C1005 JB 1H 821K-T	T	109.2/48.6
C181	4030016930	S.CER C1005 JB 1A 104K-T	T	112.1/43.2
C182	4030016780	S.CER C1005 JB 1E 153K-T	T	112.1/39.6
C183	4030017420	S.CER C1005 CH 1H 470J-T	T	104.9/45
C184	4030017760	S.CER C1005 JB 1H 222K-T	T	104.9/45.9
C185	4030017690	S.CER C1005 CH 1H 121J-T	T	107.8/48.6
C186	4030016790	S.CER C1005 JB 1E 103K-T	T	51.7/45.4
C187	4030017460	S.CER C1005 JB 1H 102K-T	T	52.6/45.4
C188	4030016790	S.CER C1005 JB 1E 103K-T	T	62.7/40.4
C189	4030017460	S.CER C1005 JB 1H 102K-T	T	63.7/40.4
C190	4030017540	S.CER C1005 CH 1H R75B-T	T	55/48.3
C191	4030016790	S.CER C1005 JB 1E 103K-T	T	70/40.9
C192	4030017540	S.CER C1005 CH 1H R75B-T	T	57.7/43
C193	4030017460	S.CER C1005 JB 1H 102K-T	T	70/39.9
C194	4030017530	S.CER C1005 CH 1H 0R5B-T	T	60/44.4

[MAIN-A UNIT] (MDC compatible)

REF NO.	PARTS NO.	DESCRIPTION	M.	H/V LOCATION
C195	4030016930	S.CER C1005 JB 1A 104K-T	B	39/30
C196	4030017730	S.CER C1005 JB 1H 471K-T	B	38.1/33.2
C197	4030016930	S.CER C1005 JB 1A 104K-T	B	38.1/32.2
C198	4030017730	S.CER C1005 JB 1H 471K-T	B	31.3/38.3
C199	4030016930	S.CER C1005 JB 1A 104K-T	B	31.3/39.2
C200	4030016930	S.CER C1005 JB 1A 104K-T	B	31.3/34
C201	4030017730	S.CER C1005 JB 1H 471K-T	B	31.3/33.1
C202	4030017460	S.CER C1005 JB 1H 102K-T	T	112.1/36.9
C203	4030017460	S.CER C1005 JB 1H 102K-T	B	100.9/47
C205	4030018900	S.CER C1005 JB 0J 474K-T	T	78.4/18.4
C206	4030016930	S.CER C1005 JB 1A 104K-T	T	78.5/16.7
C207	4030017730	S.CER C1005 JB 1H 471K-T	T	61/45.7
C208	4030017460	S.CER C1005 JB 1H 102K-T	T	60/45.7
C209	4030017460	S.CER C1005 JB 1H 102K-T	B	65/52.7
C210	4030017590	S.CER C1005 CH 1H 070C-T	B	57.6/50.3
C211	4030017620	S.CER C1005 CH 1H 100C-T	B	60/51.4
C212	4030017460	S.CER C1005 JB 1H 102K-T	B	63.8/50.8
C214	4030017460	S.CER C1005 JB 1H 102K-T	B	66.8/41.3
C215	4030017390	S.CER C1005 CH 1H 180J-T	B	38.5/47.6
C216	4030017660	S.CER C1005 CH 1H 330J-T	B	43.1/47.6
C217	4030017730	S.CER C1005 JB 1H 471K-T	B	25/32.7
C218	4030016930	S.CER C1005 JB 1A 104K-T	B	25/31.7
C219	4030017650	S.CER C1005 CH 1H 270J-T	B	23/36.3
C220	4030017600	S.CER C1005 CH 1H 080C-T	B	23/38
C221	4030016930	S.CER C1005 JB 1A 104K-T	B	5.6/23.2
C222	4030017030	S.CER C1005 JB 1A 273K-T	B	128.6/45.3
C223	4030016930	S.CER C1005 JB 1A 104K-T	B	126.3/48.2
C224	4030017640	S.CER C1005 CH 1H 150J-T	T	124.2/40.1
C225	4030016790	S.CER C1005 JB 1E 103K-T	T	124.2/37.4
C226	4030017580	S.CER C1005 CH 1H 060C-T	T	124.2/41.1
C227	4030017460	S.CER C1005 JB 1H 102K-T	B	57.6/53.5
C228	4030017460	S.CER C1005 JB 1H 102K-T	B	56.4/53.1
C229	4030017620	S.CER C1005 CH 1H 100C-T	B	52.1/53.1
C230	4030017460	S.CER C1005 JB 1H 102K-T	B	63.5/62.3
C231	4030017360	S.CER C1005 CH 1H 030B-T	B	66.3/52.2
C232	4030017460	S.CER C1005 JB 1H 102K-T	B	68.6/49.5
C235	4030017460	S.CER C1005 JB 1H 102K-T	B	44.4/50.7
C236	4030017390	S.CER C1005 CH 1H 180J-T	B	47.8/48.1
C237	4030017620	S.CER C1005 CH 1H 100C-T	B	47.4/49.4
C240	4030017460	S.CER C1005 JB 1H 102K-T	B	18.9/34.4
C241	4030017570	S.CER C1005 CH 1H 040B-T [B]	B	17/37.7
	4030017360	S.CER C1005 CH 1H 030B-T [F]		
	4030017360	S.CER C1005 CH 1H 030B-T [D]		
	4030017570	S.CER C1005 CH 1H 040B-T [G]		
	4030017360	S.CER C1005 CH 1H 030B-T [K]		
	4030017570	S.CER C1005 CH 1H 040B-T [J]		
	4030017570	S.CER C1005 CH 1H 040B-T [H]		
	4030017570	S.CER C1005 CH 1H 040B-T [I]		
	4030017360	S.CER C1005 CH 1H 030B-T [L]		
C242	4030017460	S.CER C1005 JB 1H 102K-T	B	15/34.4
C243	4030017460	S.CER C1005 JB 1H 102K-T	B	18.9/33.5
C244	4030017460	S.CER C1005 JB 1H 102K-T	B	15.7/31.7
C245	4550006780	S.TAN TEESVB2 0J 476M8R	B	5.6/18.7
C246	4030016930	S.CER C1005 JB 1A 104K-T	B	105.1/52.2
C247	4030016930	S.CER C1005 JB 1A 104K-T	B	107/52.9
C248	4030016930	S.CER C1005 JB 1A 104K-T	B	108.1/52
C249	4030018900	S.CER C1005 JB 0J 474K-T	B	121.8/47.4
C250	4030017630	S.CER C1005 CH 1H 120J-T	T	120.4/40.1
C251	4030017400	S.CER C1005 CH 1H 220J-T	B	61.9/64.2
C252	4030017420	S.CER C1005 CH 1H 470J-T	B	62.6/71.1
C253	4030017730	S.CER C1005 JB 1H 471K-T	B	61.6/71.1
C254	4030017420	S.CER C1005 CH 1H 470J-T	B	63.9/69.5
C256	4030017460	S.CER C1005 JB 1H 102K-T	B	59.7/65.5
C257	4030017460	S.CER C1005 JB 1H 102K-T	B	63.4/67.4
C258	4030017460	S.CER C1005 JB 1H 102K-T	T	13.9/32.5
C259	4030017460	S.CER C1005 JB 1H 102K-T	T	10/35
C260	4030017590	S.CER C1005 CH 1H 070C-T	B	14.2/36.3
C261	4030017460	S.CER C1005 JB 1H 102K-T	B	9.5/33.9
C262	4030017460	S.CER C1005 JB 1H 102K-T	B	13.7/37.7
C263	4030017490	S.CER C1608 JB 1A 105K-T	T	14.1/33.7
C264	4030017350	S.CER C1005 CH 1H 020B-T	B	8.4/38.6
C265	4030017420	S.CER C1005 CH 1H 470J-T [F]	B	8.6/36.3
	4030017420	S.CER C1005 CH 1H 470J-T [D]		
	4030017420	S.CER C1005 CH 1H 470J-T [K]		
	4030017420	S.CER C1005 CH 1H 470J-T [L]		
C266	4030017460	S.CER C1005 JB 1H 102K-T [F]	B	9.5/36.3
	4030017460	S.CER C1005 JB 1H 102K-T [D]		
	4030017460	S.CER C1005 JB 1H 102K-T [K]		
	4030017460	S.CER C1005 JB 1H 102K-T [L]		
C267	4030017460	S.CER C1005 JB 1H 102K-T	B	63.9/70.5
C268	4030017640	S.CER C1005 CH 1H 150J-T	B	68.2/69.1
C269	4030017390	S.CER C1005 CH 1H 180J-T [B]	B	69.7/69.1
	4030017650	S.CER C1005 CH 1H 270J-T [F]		
	4030017650	S.CER C1005 CH 1H 270J-T [D]		
	4030017390	S.CER C1005 CH 1H 180J-T [G]		
	4030017650	S.CER C1005 CH 1H 270J-T [K]		
	4030017390	S.CER C1005 CH 1H 180J-T [J]		
	4030017390	S.CER C1005 CH 1H 180J-T [H]		
	4030017390	S.CER C1005 CH 1H 180J-T [I]		
	4030017650	S.CER C1005 CH 1H 270J-T [L]		
C270	4030017390	S.CER C1005 CH 1H 180J-T	B	71.2/69
C271	4030017400	S.CER C1005 CH 1H 220J-T [B]	T	74.3/71.7
	4030017390	S.CER C1005 CH 1H 180J-T [F]		
	4030017390	S.CER C1005 CH 1H 180J-T [D]		
	4030017400	S.CER C1005 CH 1H 220J-T [G]		
	4030017390	S.CER C1005 CH 1H 180J-T [K]		
	4030017400	S.CER C1005 CH 1H 220J-T [J]		
	4030017400	S.CER C1005 CH 1H 220J-T [H]		
	4030017400	S.CER C1005 CH 1H 220J-T [I]		
	4030017390	S.CER C1005 CH 1H 180J-T [L]		
C272	4030016930	S.CER C1005 JB 1A 104K-T	T	7.9/39.5
C273	4030016930	S.CER C1005 JB 1A 104K-T	T	9.5/39.5
C274	4030017460	S.CER C1005 JB 1H 102K-T	T	7.4/41.2
C275	4030016930	S.CER C1005 JB 1A 104K-T	T	15/41
C276	4030017620	S.CER C1005 CH 1H 100C-T	B	10.5/41

M.=Mounted side (T: Mounted on the Top side, B: Mounted on the Bottom side)
S.=Surface mount

[MAIN-A UNIT] (MDC compatible)

REF NO.	PARTS NO.	DESCRIPTION	M.	H/V LOCATION
C277	4030017460	S.CER C1005 JB 1H 102K-T	T	14/41
C278	4030017340	S.CER C1005 CH 1H 010B-T	B	8.9/43.6
C279	4030017640	S.CER C1005 CH 1H 150J-T	B	6.9/44.2
C280	4030017550	S.CER C1005 CH 1H 1R5B-T	B	9.4/46.1
C281	4030017420	S.CER C1005 CH 1H 470J-T	T	97.9/34.2
C282	4030017420	S.CER C1005 CH 1H 470J-T	T	102.3/40.9
C283	4030017420	S.CER C1005 CH 1H 470J-T	B	97.4/44.6
C284	4030017420	S.CER C1005 CH 1H 470J-T	T	94.8/35.5
C285	4030017420	S.CER C1005 CH 1H 470J-T	B	94.2/44.4
C286	4030017420	S.CER C1005 CH 1H 470J-T	T	92.1/43.3
C287	4030017420	S.CER C1005 CH 1H 470J-T	T	92.1/41.6
C288	4030017460	S.CER C1005 JB 1H 102K-T	B	4.8/46.5
C289	4030017640	S.CER C1005 CH 1H 150J-T [B]	B	6.6/34.2
	4030017640	S.CER C1005 CH 1H 150J-T [G]		
	4030017640	S.CER C1005 CH 1H 150J-T [J]		
	4030017640	S.CER C1005 CH 1H 150J-T [H]		
	4030017640	S.CER C1005 CH 1H 150J-T [I]		
C290	4030017400	S.CER C1005 CH 1H 220J-T	T	74.3/73.6
C291	4030017730	S.CER C1005 JB 1H 471K-T	T	69.3/76.1
C292	4550000560	S.TAN TEESVA 1V 334M8R	T	67.6/74.4
C294	4030017420	S.CER C1005 CH 1H 470J-T	T	70.4/76.1
C295	4030017420	S.CER C1005 CH 1H 470J-T	T	56.7/67.3
C296	4510008530	S.ELE EEE1HA2R2SR	T	59.6/80
C297	4030017460	S.CER C1005 JB 1H 102K-T	T	56.7/68.3
C299	4030017640	S.CER C1005 CH 1H 150J-T	B	6.9/47.9
C301	4030017580	S.CER C1005 CH 1H 060C-T	B	13.2/49.5
C302	4030017460	S.CER C1005 JB 1H 102K-T	B	4.4/44.4
C303	4030016930	S.CER C1005 JB 1A 104K-T	B	129.6/32
C304	4030017420	S.CER C1005 CH 1H 470J-T	B	90/43.4
C305	4030011140	S.CER GRM31M2C2H120JV01L (GRM42-6 CH)	T	27.6/78.7
C306	4030011120	S.CER GRM31M2C2H100JV01L (GRM42-6 CH)	T	27.6/76.1
C307	4030011120	S.CER GRM31M2C2H100JV01L (GRM42-6 CH)	T	27.7/71.8
C308	4030011070	S.CER GRM31M2C2H5R0CY21L (GRM42-6 CH) [B]	T	27.7/69.2
	4030011140	S.CER GRM31M2C2H120JV01L (GRM42-6 CH) [F]		
	4030011140	S.CER GRM31M2C2H120JV01L (GRM42-6 CH) [D]		
	4030011070	S.CER GRM31M2C2H5R0CY21L (GRM42-6 CH) [G]		
	4030011140	S.CER GRM31M2C2H120JV01L (GRM42-6 CH) [K]		
	4030011070	S.CER GRM31M2C2H5R0CY21L (GRM42-6 CH) [J]		
	4030011070	S.CER GRM31M2C2H5R0CY21L (GRM42-6 CH) [H]		
	4030011070	S.CER GRM31M2C2H5R0CY21L (GRM42-6 CH) [I]		
	4030011140	S.CER GRM31M2C2H120JV01L (GRM42-6 CH) [L]		
C309	4030017460	S.CER C1005 JB 1H 102K-T	T	71.5/76.1
C310	4030017420	S.CER C1005 CH 1H 470J-T	T	43/76.1
C311	4030017460	S.CER C1005 JB 1H 102K-T	T	44.1/76.1
C312	4030017730	S.CER C1005 JB 1H 471K-T	T	45.3/76.1
C313	4510008680	S.ELE EEE1EA220SP	T	51.7/77.7
C314	4030017730	S.CER C1005 JB 1H 471K-T	B	40.2/68.3
C315	4030017460	S.CER C1005 JB 1H 102K-T	T	55.7/73.6
C316	4030016790	S.CER C1005 JB 1E 103K-T	T	54.1/72.6
C317	4030011600	S.CER C1608 JB 1E 104K-T	T	54.1/67
C318	4030017460	S.CER C1005 JB 1H 102K-T [B]	T	35.1/63.3
	4030017460	S.CER C1005 JB 1H 102K-T [G]		
	4030017460	S.CER C1005 JB 1H 102K-T [J]		
	4030017460	S.CER C1005 JB 1H 102K-T [H]		
	4030017460	S.CER C1005 JB 1H 102K-T [I]		
C319	4030017460	S.CER C1005 JB 1H 102K-T [B]	T	47.3/67.4
	4030017460	S.CER C1005 JB 1H 102K-T [G]		
	4030017460	S.CER C1005 JB 1H 102K-T [J]		
	4030017460	S.CER C1005 JB 1H 102K-T [H]		
	4030017460	S.CER C1005 JB 1H 102K-T [I]		
C320	4030017580	S.CER C1005 CH 1H 060C-T	B	15/52.7
C321	4030017460	S.CER C1005 JB 1H 102K-T	B	14.9/49.5
C322	4030017600	S.CER C1005 CH 1H 080C-T	B	19.3/52
C323	4030017570	S.CER C1005 CH 1H 040B-T	B	20/49.6
C324	4030017420	S.CER C1005 CH 1H 470J-T	B	90/41.8
C325	4030017460	S.CER C1005 JB 1H 102K-T	T	72.5/64.9
C326	4030017420	S.CER C1005 CH 1H 470J-T	B	46.2/64.3
C327	4030017460	S.CER C1005 JB 1H 102K-T	B	84.2/79
C328	4030017460	S.CER C1005 JB 1H 102K-T	B	83.2/79
C329	4030017460	S.CER C1005 JB 1H 102K-T	B	82.1/79
C330	4030017460	S.CER C1005 JB 1H 102K-T	B	81/79
C331	4030017460	S.CER C1005 JB 1H 102K-T	B	80/79
C332	4030016930	S.CER C1005 JB 1A 104K-T	T	51.9/71.9
C334	4030017460	S.CER C1005 JB 1H 102K-T	T	49.5/68.6
C335	4030017460	S.CER C1005 JB 1H 102K-T	T	53.8/63.2
C336	4030017580	S.CER C1005 CH 1H 060C-T	B	20.8/52
C337	4030017390	S.CER C1005 CH 1H 180J-T	B	25.1/51.2
C338	4510008600	S.ELE EEE1CA4R7NR	T	79.1/69.1
C339	4030017460	S.CER C1005 JB 1H 102K-T	T	79.1/62.1
C340	4030017460	S.CER C1005 JB 1H 102K-T	T	37.5/20.8
C341	4030016790	S.CER C1005 JB 1E 103K-T	T	41.9/19.4
C342	4030017200	S.CER GRM31BR32J102KY01L	T	25.3/62.5
C343	4030011270	S.CER GRM31M2C2H200JV01L (GRM42-6 CH)	T	22.1/63.9
C345	4030011170	S.CER GRM31M2C2H180JV01L (GRM42-6 CH)	T	17.3/57.4
C346	4030011170	S.CER GRM31M2C2H180JV01L (GRM42-6 CH)	T	30.2/62.8
C347	4030017520	S.CER C1005 CH 1H 0R3B-T	B	25.4/63
C348	4030017460	S.CER C1005 JB 1H 102K-T	B	31.5/63.4
C349	4030016930	S.CER C1005 JB 1A 104K-T	T	100.5/63.5
C350	4550005980	S.TAN TEESVA 1A 475M8R	T	101.6/62
C351	4030016930	S.CER C1005 JB 1A 104K-T	T	110.6/67.4

[MAIN-A UNIT] (MDC compatible)

REF NO.	PARTS NO.	DESCRIPTION	M.	H/V LOCATION
C352	4030017460	S.CER C1005 JB 1H 102K-T	B	124.6/59.6
C353	4550005980	S.TAN TEESVA 1A 475M8R	B	124.5/61.3
C354	4550006250	S.TAN TEESVA 1A 106M8R	B	112.9/61.7
C355	4030017420	S.CER C1005 CH 1H 470J-T	B	112.6/60.1
C356	4030011270	S.CER GRM31M2C2H200JV01L (GRM42-6 CH)	T	14.7/62.9
C357	4030011270	S.CER GRM31M2C2H200JV01L (GRM42-6 CH)	T	10.4/62.9
C358	4030007030	S.CER C1608 CH 1H 150J-T	B	10.6/56.4
C359	4030011340	S.CER C1608 CH 1H 471J-T	B	9.4/56.4
C360	4030017460	S.CER C1005 JB 1H 102K-T	B	4/53
C361	4030017460	S.CER C1005 JB 1H 102K-T	T	103.9/53.5
C362	4030017460	S.CER C1005 JB 1H 102K-T	T	108.2/24.5
C363	4510008540	S.ELE EEE1CA100SR	T	139.1/31.9
C365	4550007650	S.TAN F931V105MAABMA	B	106.7/65
C366	4550007650	S.TAN F931V105MAABMA	B	104.2/65
C367	4550007650	S.TAN F931V105MAABMA	B	101.6/65
C368	4550007650	S.TAN F931V105MAABMA	B	99.5/64.6
C369	4030011270	S.CER GRM31M2C2H200JV01L (GRM42-6 CH)	T	15.8/78.9
C370	4030011270	S.CER GRM31M2C2H200JV01L (GRM42-6 CH)	T	15.8/83.1
C371	4030017460	S.CER C1005 JB 1H 102K-T	B	4.1/81.6
C372	4030006850	S.CER C1608 JB 1H 471K-T	B	8.3/77.1
C373	4030016930	S.CER C1005 JB 1A 104K-T	B	130.9/51.7
C374	4030016930	S.CER C1005 JB 1A 104K-T	B	133/51.3
C375	4030016930	S.CER C1005 JB 1A 104K-T	B	132.4/54.6
C377	4030017460	S.CER C1005 JB 1H 102K-T	T	105.9/51.9
C378	4030017460	S.CER C1005 JB 1H 102K-T	T	108.2/78
C379	4030016930	S.CER C1005 JB 1A 104K-T	B	108.4/80.3
C380	4030017460	S.CER C1005 JB 1H 102K-T	T	119.9/83.2
C381	4030016790	S.CER C1005 JB 1E 103K-T	B	135.9/70.5
C383	4030017460	S.CER C1005 JB 1H 102K-T	B	135.9/71.5
C384	4510008870	S.ELE EEE1AA471UP	T	129.9/64.9
C386	4030016930	S.CER C1005 JB 1A 104K-T	B	138.8/53.7
C387	4030017720	S.CER C1005 JB 1H 331K-T	B	135.4/51.3
C388	4030018860	S.CER C1005 JB 0J 105K-T	B	138.6/52.2
C389	4030016930	S.CER C1005 JB 1A 104K-T	B	139.1/49.4
C390	4030016930	S.CER C1005 JB 1A 104K-T	B	137.8/55.4
C391	4030016930	S.CER C1005 JB 1A 104K-T	T	101.8/82.3
C392	4030017460	S.CER C1005 JB 1H 102K-T	B	131/74.6
C393	4030017460	S.CER C1005 JB 1H 102K-T	B	99/79
C394	4030017420	S.CER C1005 CH 1H 470J-T	B	115.4/68
C395	4030017460	S.CER C1005 JB 1H 102K-T	B	128.2/76.5
C397	4030017460	S.CER C1005 JB 1H 102K-T	B	99.8/86.3
C398	4030017420	S.CER C1005 CH 1H 470J-T	B	100.8/86.3
C399	4030018860	S.CER C1005 JB 0J 105K-T	B	136.3/37.1
C400	4030016930	S.CER C1005 JB 1A 104K-T	B	139.7/35.3
C411	4510008780	S.ELE EEE1EA471P	T	117.2/63.6
C412	4510008780	S.ELE EEE1EA471P	T	132.7/54.3
C413	4030018900	S.CER C1005 JB 0J 474K-T	B	135.1/46.8
C414	4510008540	S.ELE EEE1CA100SR	T	118.7/50.5
C415	4030016930	S.CER C1005 JB 1A 104K-T	B	103/23.8
C416	4030016930	S.CER C1005 JB 1A 104K-T	B	120.3/51.6
C417	4030016790	S.CER C1005 JB 1E 103K-T	B	115.6/52.8
C418	4030017460	S.CER C1005 JB 1H 102K-T	T	109.6/54.5
C419	4030016790	S.CER C1005 JB 1E 103K-T	T	42.9/39.2
C420	4030017420	S.CER C1005 CH 1H 470J-T	T	41/37.4
C421	4030016930	S.CER C1005 JB 1A 104K-T	B	36/24.7
C422	4030016790	S.CER C1005 JB 1E 103K-T	T	43.1/31.9
C423	4030017420	S.CER C1005 CH 1H 470J-T	T	39.9/35.3
C424	4030016930	S.CER C1005 JB 1A 104K-T	T	38.9/32.2
C425	4030017460	S.CER C1005 JB 1H 102K-T	B	134.8/66.1
C426	4030018860	S.CER C1005 JB 0J 105K-T	B	110/12.1
C427	4030017460	S.CER C1005 JB 1H 102K-T	B	109.1/10.4
C430	4030017570	S.CER C1005 CH 1H 040B-T	T	78.2/44.8
C431	4030017590	S.CER C1005 CH 1H 070C-T	T	23/21.9
C432	4030016930	S.CER C1005 JB 1A 104K-T	T	22.4/10.5
C433	4030016930	S.CER C1005 JB 1A 104K-T	B	23/7.3
C434	4030017650	S.CER C1005 CH 1H 270J-T	B	28.3/5.6
C435	4030017040	S.CER C1005 JB 1A 333K-T	B	29.2/7.3
C436	4030016930	S.CER C1005 JB 1A 104K-T	B	21.2/5.6
C437	4030016930	S.CER C1005 JB 1A 104K-T	B	27.6/8.7
C438	4030016930	S.CER C1005 JB 1A 104K-T	B	31.6/5.7
C440	4030016930	S.CER C1005 JB 1A 104K-T	B	22.1/8.9
C441	4030017610	S.CER C1005 CH 1H 090C-T	B	25.9/39.5
C451	4030018860	S.CER C1005 JB 0J 105K-T	B	93.8/6.5
C452	4030019120	S.CER GRM188B31E105KA75D	B	129.7/64.1
C453	4030016930	S.CER C1005 JB 1A 104K-T	B	132.4/56.3
C454	4030017430	S.CER C1005 CH 1H 101J-T	T	90/13.9
J1	6510026770	S.CON AXK540147YG	T	124.5/9.7
J2	6510026770	S.CON AXK540147YG	T	101.5/9.7
J3	6510021301	S.CON 52365-1071	T	90.3/62.6
J5	6510023092	S.CON 20FLT-SM2-TB(LF)(SN)(M)	T	108.3/81.8
J7	6450000140	CON HSJ0807-01-010		
J10	6510023092	S.CON 20FLT-SM2-TB(LF)(SN)(M)	T	71/7
EP1	6910015600	S.BEA ACZ1005Y-241 (240)	B	39.8/8.1
EP2	6910015370	S.BEA ACZ1005Y-102-T	B	50.1/12.4
EP3	6910015370	S.BEA ACZ1005Y-102-T	T	82.6/37.1
EP4	6910010280	BEA HF70BB9.5X10.4X4.9		
EP5	6910010280	BEA HF70BB9.5X10.4X4.9		
EP6	6910011560	BEA HF70BB4.5X5X1.6		
EP8	0880002600	UNI EX-2887 #13 UT-126H [G]		
	0880002600	UNI EX-2887 #13 UT-126H [K]		
	0880002600	UNI EX-2887 #13 UT-126H [J]		
	0880002600	UNI EX-2887 #13 UT-126H [H]		
	0880002600	UNI EX-2887 #13 UT-126H [I]		
	0880002600	UNI EX-2887 #13 UT-126H [L]		

M.=Mounted side (T: Mounted on the Top side, B: Mounted on the Bottom side)
S.=Surface mount

BOARD LAYOUTS

The combination of this side and the bottom side shows the board layout in the same configuration as the actual P.C.Board.

• MDC compatible

• CONNECT UNIT (TOP VIEW)

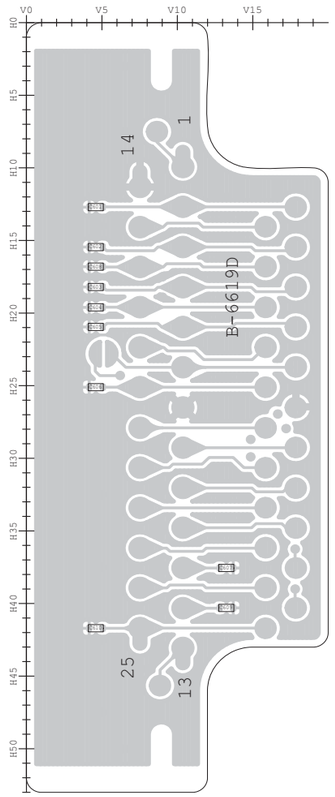

• MAIN-A UNIT (TOP VIEW)

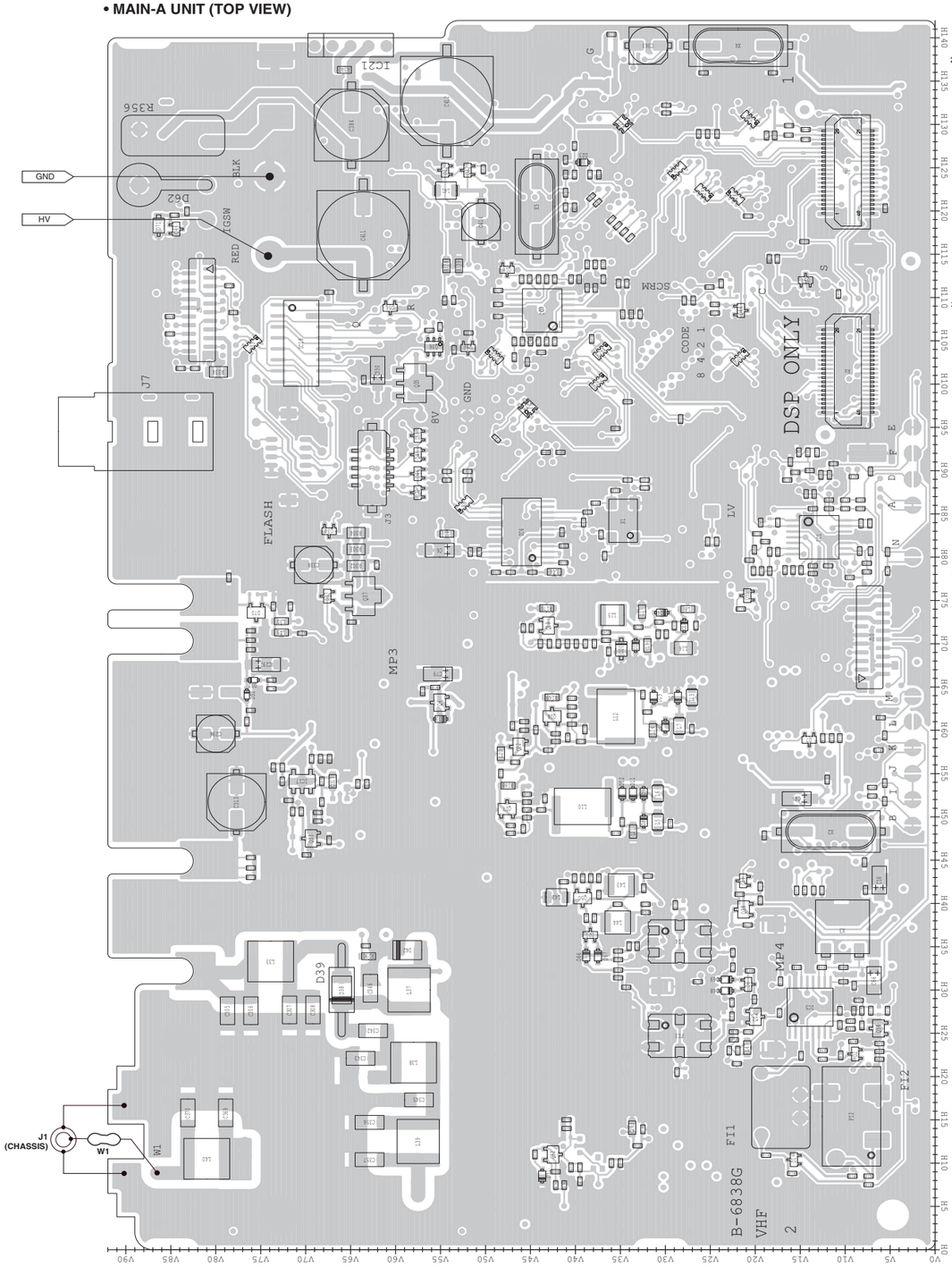

J1

20	DASW	NC	21
	PFMF	CCK	
	EMPH	CSI	
	GND	CSO	
	OPT3	NC	
	OPT2	CIRQ	
	OPT1	CCS	
	SIGO	REM	
	BUSY	NC	
	NC	AFOUT	
	NC	DISC	
	NC	RMUT	
	NC	BEPO	
	MCIN	AFON	
	NC	MMUTI	
	MCOT	NC	
	PTTO	VCC	
	PTTI	+5V	
	GND	GND	
1	NC	NC	40

J2

20	GND	GND	21
	GND	CCK	
	NC	CSI	
	GND	CSO	
	OPT3	NC	
	OPT2	CIRQ	
	OPT1	CCS	
	NC	NC	
	NC	DAFO	
	NC	NC	
	VREF	DISC	
	NC	NC	
	DMI	NC	
	NC	NC	
	DMO	NC	
	NC	NC	
	NC	8V	
	NC	+5V	
	GND	GND	
1	D_IF	D_IF	40

J10

		GND	20
19	GND	SP+	
	SP+	NC	
	SP-GND	SP-GND	
	NC	AFO	
	GND	MCIN	
	GND	POSW	
	FMDA	MFDA	
	8V	GND	
	NC	VCC	2
1	VCC		

• FRONT UNIT (TOP VIEW)

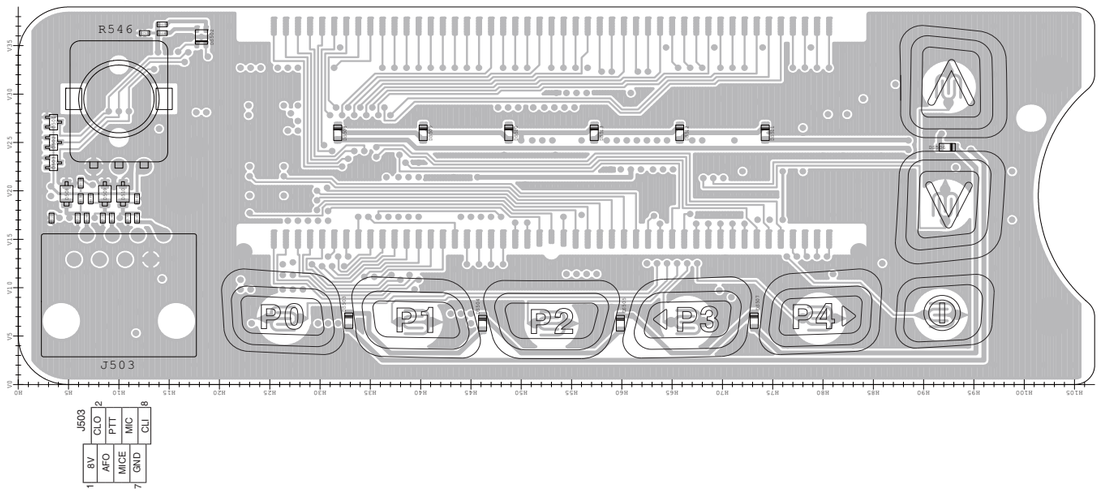

J503

		CLO	2
		PTT	
		MIC	
		CLI	8
1	8V		
	AFO		
	MICE		
7	GND		

• MDC compatible

The combination of this side and the bottom side shows the board layout in the same configuration as the actual P.C.Board.

• MAIN-A UNIT (BOTTOM VIEW)

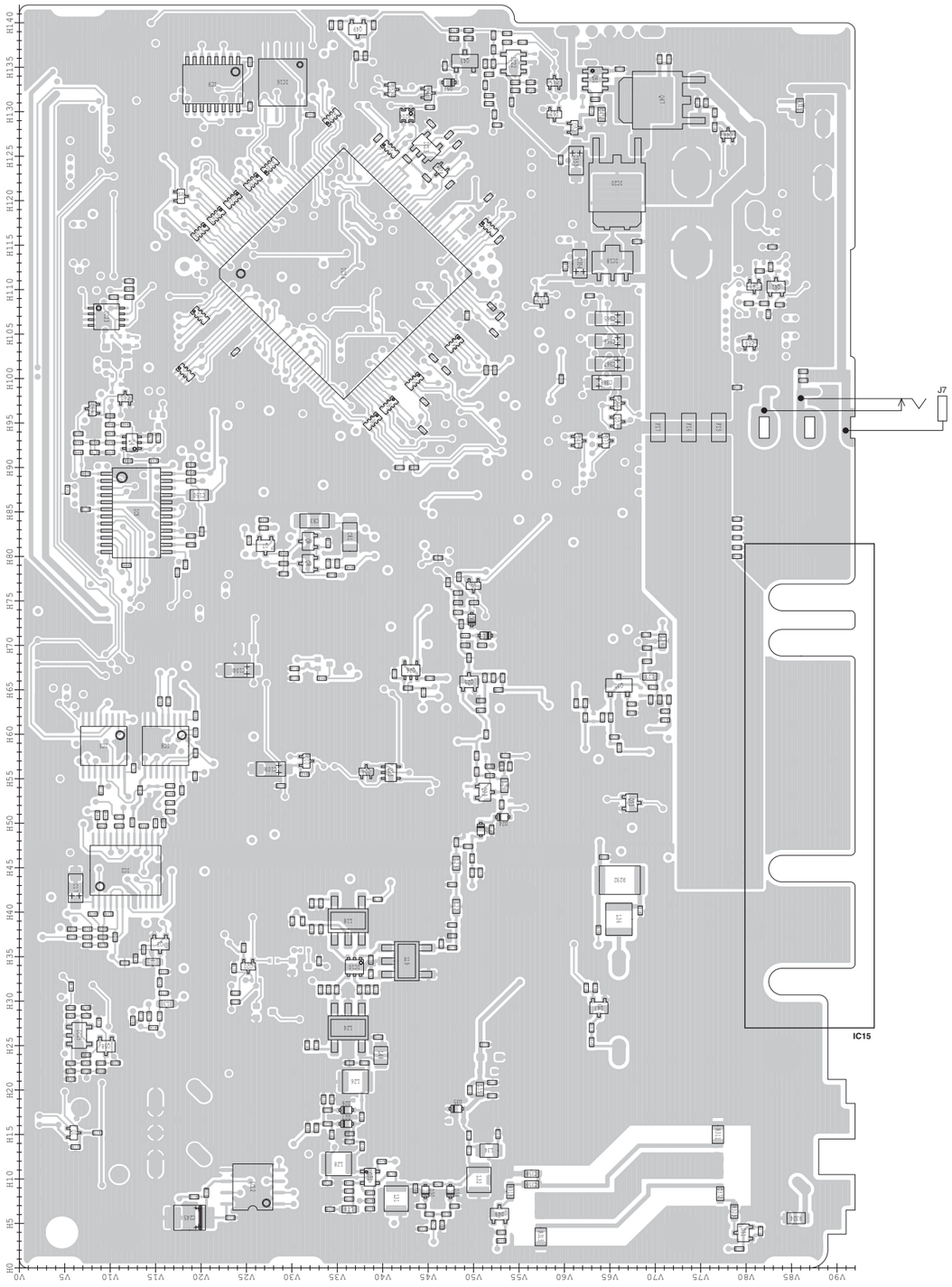

• CONNECT UNIT (BOTTOM VIEW)

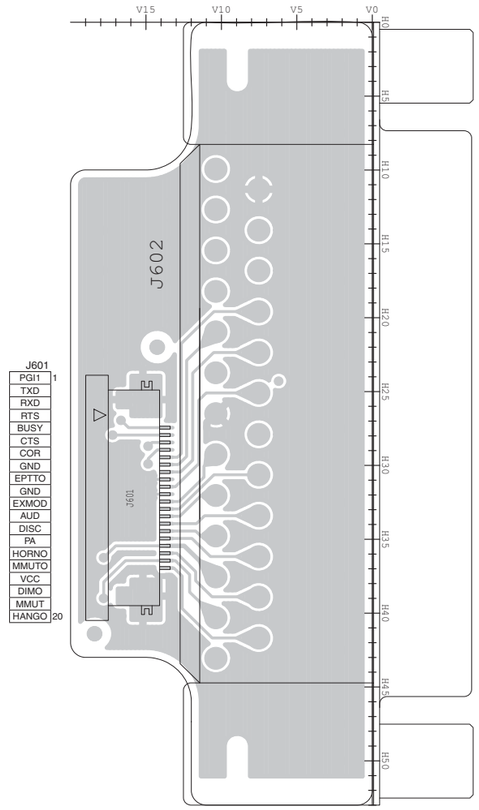

• FRONT UNIT (BOTTOM VIEW)

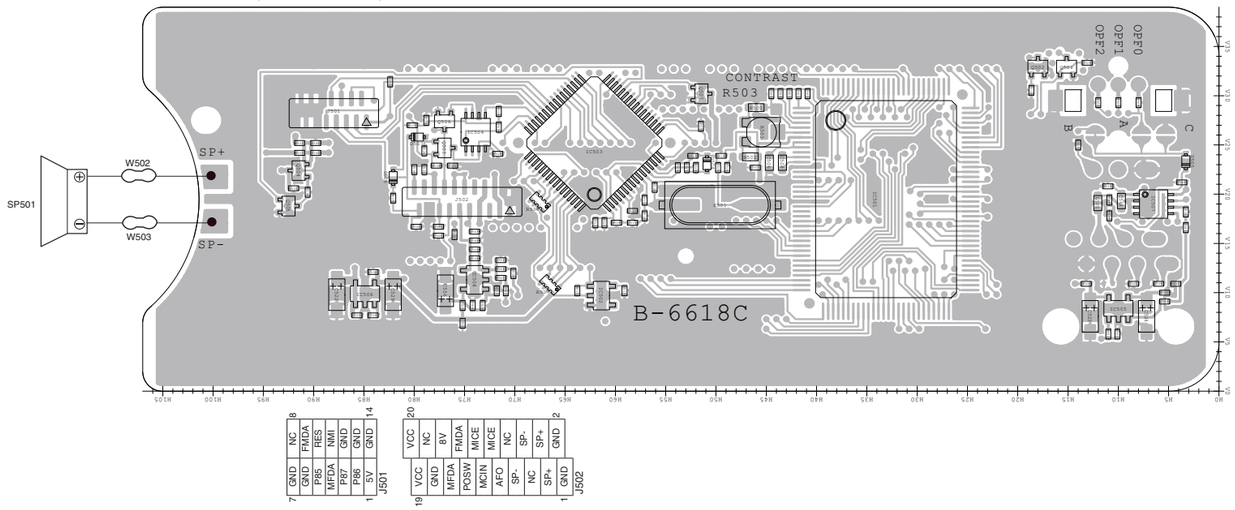

VOLTAGE DIAGRAM

FRONT UNIT

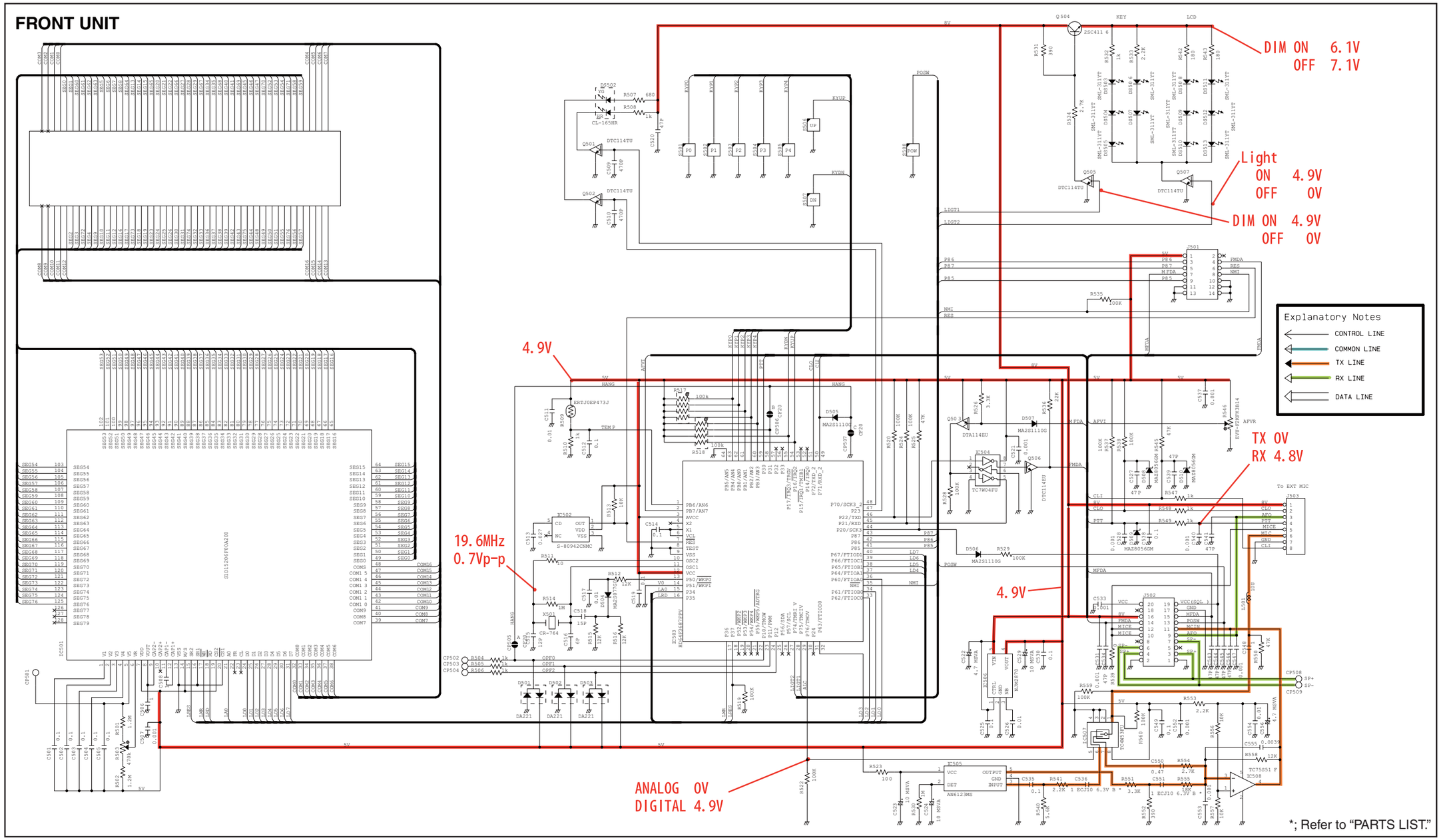

• **Other than "MDC compatible"**

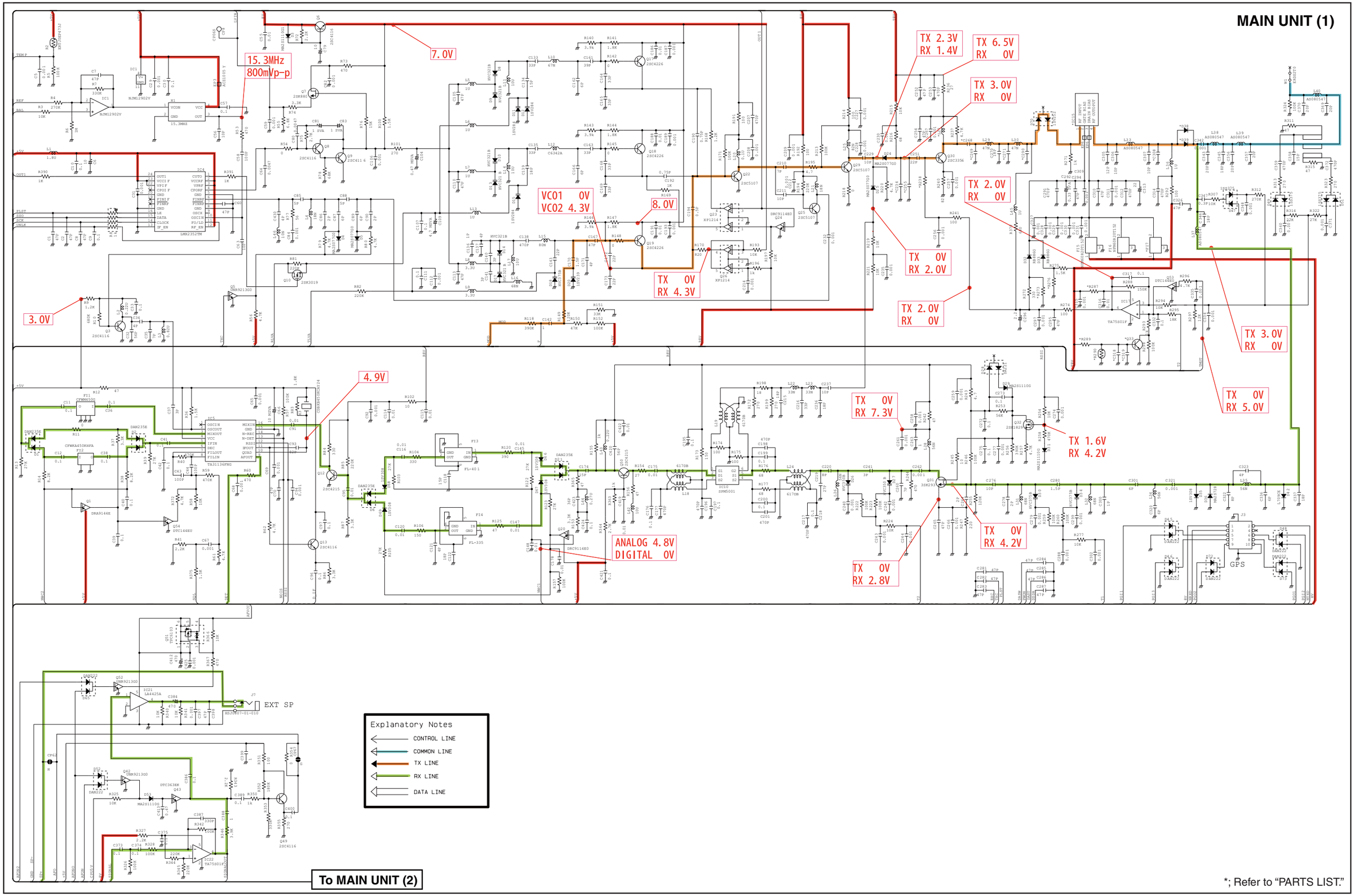

*; Refer to "PARTS LIST."

• **Other than "MDC compatible"**

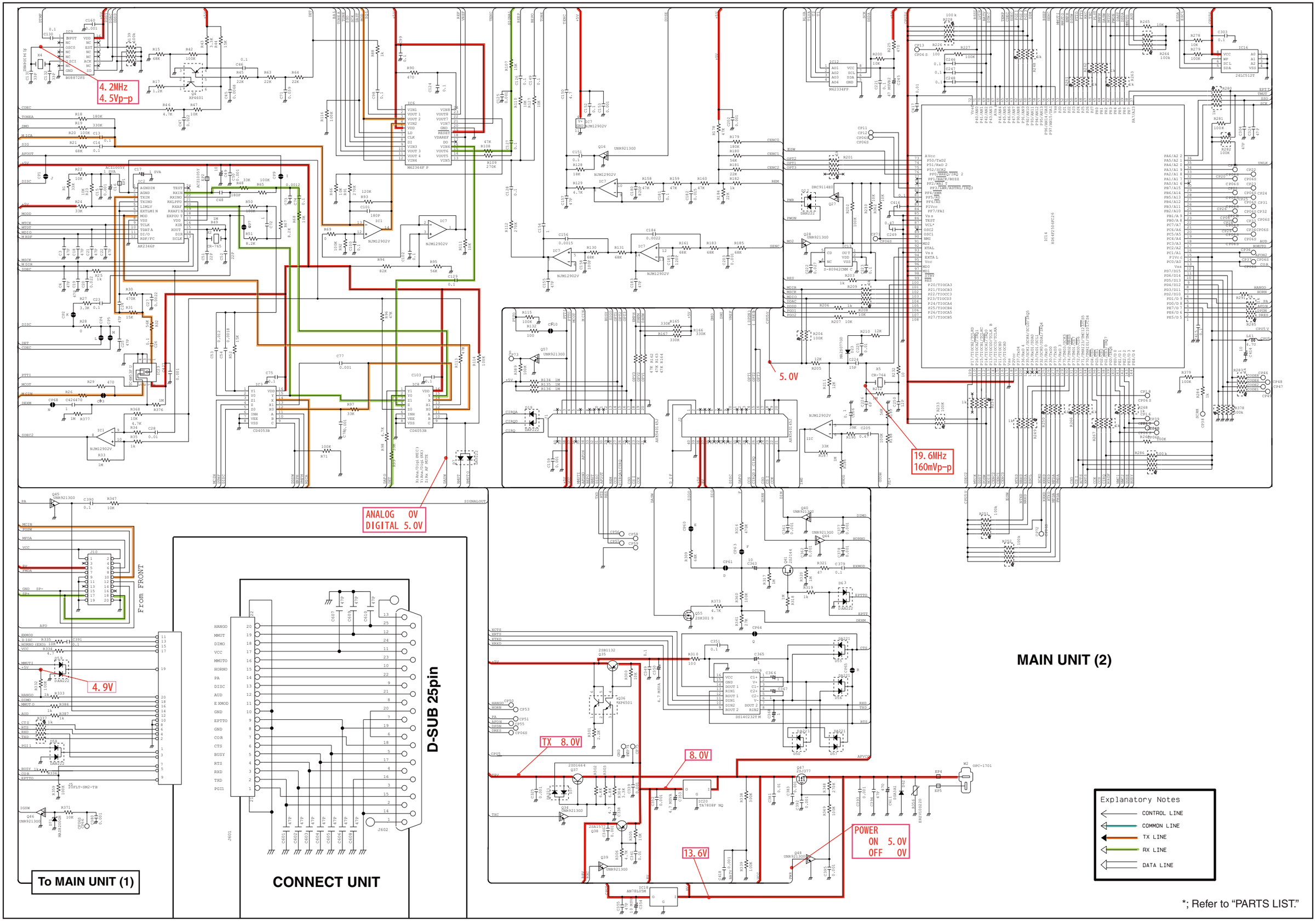

*; Refer to "PARTS LIST."

• **MDC compatible**

MAIN-A UNIT (1)

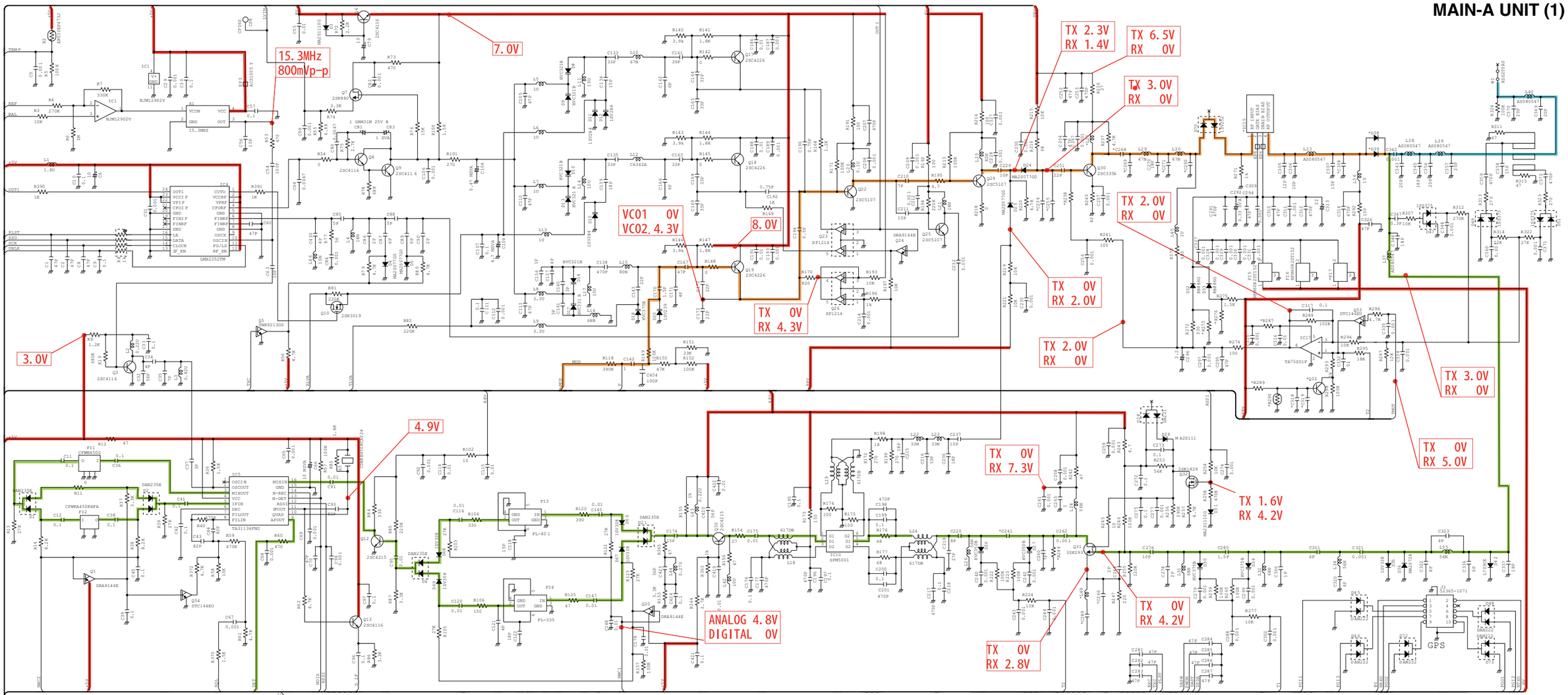

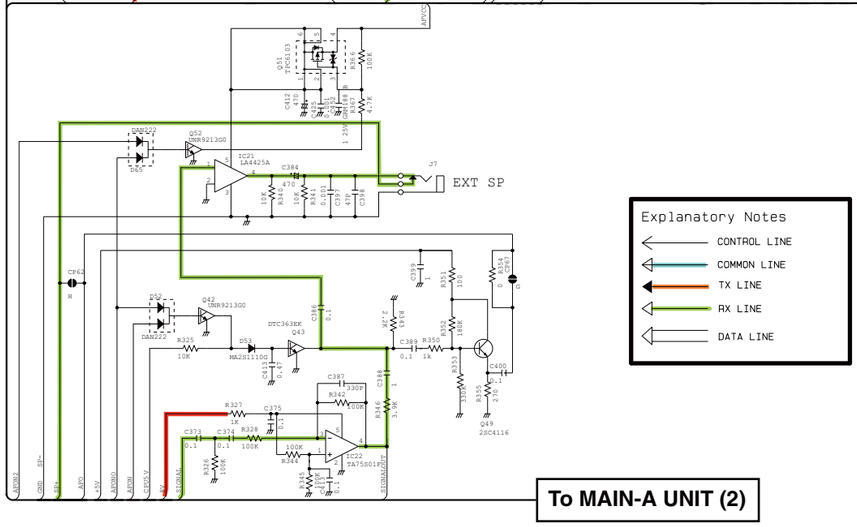

Explanatory Notes

- CONTROL LINE
- COMMON LINE
- TX LINE
- RX LINE
- DATA LINE

*; Refer to "PARTS LIST."

• **MDC compatible**

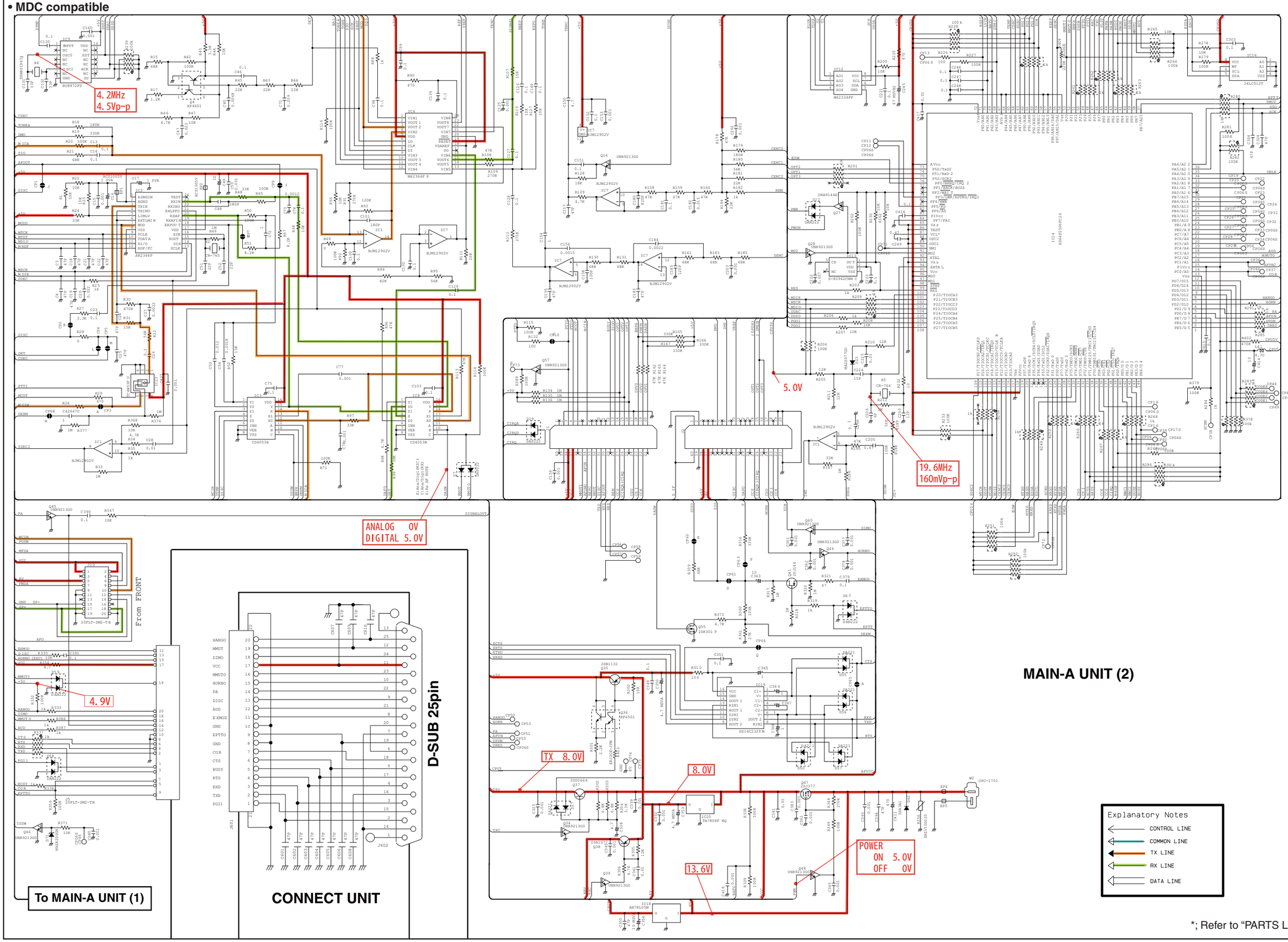

*; Refer to "PARTS LIST."

Nov. 2009

SERVICE MANUAL ADDENDUM

IC-F5061 IC-F5062 IC-F5063 IC-F5061D IC-F5062D

CONTENTS

PARTS LIST 1
BOARD LAYOUTS 14
VOLTAGE DIAGRAM 16

PARTS LIST

[MAIN UNIT] (Other than "MDC compatible")

REF NO.	PARTS NO.	DESCRIPTION	M.	H/V LOCATION
IC1	1110005340	S.IC NJM12902V-TE1-#ZZZB	T	82.3/12.9
IC2	1110006221	S.IC AK2346P-E2/P	B	44.7/11.7
IC3	1140013200	S.IC CD4053BPWR	B	58.7/9.3
IC4	1130010100	S.IC LMX2352TMX/NOPB	T	82.9/46
IC5	1110003491	S.IC TA31136FNG(D,EL)	T	28/13.9
IC6	1190001350	S.IC M62364FP 600D	B	84.9/12.9
IC7	1110005340	S.IC NJM12902V-TE1-#ZZZB	T	108.5/43.7
IC8	1140013200	S.IC CD4053BPWR	B	58.7/16.1
IC9	1130012960	S.IC BU8872FS-E2	B	133.1/21.3
IC10	1190002051	S.IC SPM5001-TL-E	B	33.8/36.9
IC12	1190001340	S.IC M62334FP 600C	B	9.1/25.7
IC13	1110005771	S.IC S-80942CNMC-G9CT2G	B	126/44.8
IC14	1140014550	S.IC HD64F2506RFC26DV(EMPTY)	B	111.8/35.7
IC15	1150002073	IC RA60H1317M-125 [USA-01]		
	1150002042	IC RA30H1317M-121 [EXP-01]		
	1150002042	IC RA30H1317M-121 [EUR-01]		
IC16	1140012950	S.IC 24LC512T-I/SM <SEI>	B	133.3/29
IC17	1110002751	S.IC TA75S01F(TE85R,F)	T	54.1/70.4
IC18	1180000970	S.IC AN78L05M-(E1)	B	113/65.3
IC19	1120002510	S.IC DS14C232TM S	T	104.7/70.5
IC20	1180001252	S.IC TA7808F(TE16L1,NQ)	B	121.5/65.8
IC21	1110003091	IC LA4425A-E		
IC22	1110002751	S.IC TA75S01F(TE85R,F)	B	135.5/54.4
IC23	1130006221	S.IC TC4W53FU(TE12L,F)	B	106.9/9.6
Q1	1590003231	S.TRA UNR9113G0L	B	15.2/6
Q3	1530002851	S.TRA 2SC4116-BL(TE85R,F)	B	36.4/15.5
Q4	1590001650	S.TRA XP4601(TX)	B	92.8/12.4
Q5	1590003291	S.TRA UNR9213G0L	B	76.7/50
Q6	1530002851	S.TRA 2SC4116-BL(TE85R,F)	T	63.2/55.1
Q7	1560000541	S.FET 2SK880-Y(T5RICOM,F)	B	81.2/27.1
Q8	1530002851	S.TRA 2SC4116-BL(TE85R,F)	B	79.2/31.8
Q9	1530002851	S.TRA 2SC4116-BL(TE85R,F)	B	81.7/31.8
Q10	1560001360	S.FET 2SK3019 TL	B	57/31.6
Q12	1530002601	S.TRA 2SC4215-O(TE85R,F)	T	26.9/20
Q13	1530002851	S.TRA 2SC4116-BL(TE85R,F)	B	31.8/9.9
Q16	1590003291	S.TRA UNR9213G0L	T	113.2/47.6
Q17	1530002920	S.TRA 2SC4226-T1 R25	T	50.9/47.6
Q18	1530002920	S.TRA 2SC4226-T1 R25	T	61.6/42.6
Q19	1530002920	S.TRA 2SC4226-T1 R25	T	72.1/43
Q20	1590003231	S.TRA UNR9113G0L	B	33.9/25.2
Q22	1530003311	S.TRA 2SC5107-O(TE85R,F)	T	58.1/46.3
Q23	1590001400	S.TRA XP1214(TX)	B	55.7/40.9
Q24	1590003281	S.TRA UNR9211G0L	B	55.8/38.2
Q25	1530003311	S.TRA 2SC5107-O(TE85R,F)	B	65.9/49.5
Q26	1590001400	S.TRA XP1214(TX)	B	67.2/43.1
Q27	1590003231	S.TRA UNR9113G0L	T	124.7/52
Q28	1590003291	S.TRA UNR9213G0L	B	123.4/46.3
Q29	1530003311	S.TRA 2SC5107-O(TE85R,F)	B	53.5/51.2
Q30	1530000372	S.TRA 2SC3356-T1B R (R24)	B	65.5/66
Q31	1580000731	S.FET 3SK293(TE85L,F)	B	10.2/38.6
Q32	1560000841	S.FET 2SK1829(TE85R,F)	T	11/42.5
Q33	1530002851	S.TRA 2SC4116-BL(TE85R,F) [USA-01] only	T	47.5/69.4
Q34	1590003291	S.TRA UNR9213G0L	T	83/67.4
Q35	1520000460	S.TRA 2SB1132 T100 R	T	100.1/57.9
Q36	1590001190	S.TRA XP6501-(TX).AB	T	104.3/55.8
Q37	1540000550	S.TRA 2SD1664 T100Q	T	75.5/63.6
Q38	1510000920	S.TRA 2SA1577 T106 Q	T	39.3/21.3
Q39	1590003291	S.TRA UNR9213G0L	T	42.6/21.3
Q40	1590003291	S.TRA UNR9213G0L	T	104.1/51.9
Q41	1590001451	S.FET 2SJ144-GR (TE85R,F)	B	110.3/83.3
Q42	1590003291	S.TRA UNR9213G0L	B	132.1/45
Q43	1590000990	S.TRA DTC363EK T146	B	135.7/49
Q44	1590003291	S.TRA UNR9213G0L	T	108.5/21.6
Q45	1590003291	S.TRA UNR9213G0L	B	133.3/58.9
Q46	1590003291	S.TRA UNR9213G0L	T	117.9/84.4
Q47	1550000100	S.FET 2SJ377 (TE16L1,NQ)	B	131.3/71.5
Q48	1590003291	S.TRA UNR9213G0L	B	124.9/77.7
Q49	1530002851	S.TRA 2SC4116-BL(TE85R,F)	B	139.3/37.2
Q50	1530002601	S.TRA 2SC4215-O(TE85R,F)	T	40.6/39.2
Q51	1590003321	S.FET TPC6103(TE85L,F)	B	133.6/63.4
Q52	1590003291	S.TRA UNR9213G0L	B	128.2/61.1
Q53	1590000430	S.TRA DTC144EUA T106	B	52.3/67.4
Q54	1590000430	S.TRA DTC144EUA T106	T	25.5/6.3
Q55	1560001360	S.FET 2SK3019 TL	T	75.5/20.9
Q57	1590003291	S.TRA UNR9213G0L	T	112/14.4
D1	1750001070	S.DIO DAN235ETL	T	10.4/15.7
D2	1750001070	S.DIO DAN235ETL	T	22.6/8.9
D3	1790001251	S.DIO MA2S1110GL	T	61.3/55
D4	1790001261	S.DIO MA2S077G0L	B	72.9/49.8
D5	1790001261	S.DIO MA2S077G0L	B	71.1/51.3
D6	1750001070	S.DIO DAN235ETL	T	30.6/20.8
D7	1160000140	S.DIO DAP222 TL	T	58.9/14
D8	1720000791	S.VAR HVC321B1TRF-E	T	49.5/32.4
D9	1720000791	S.VAR HVC321B1TRF-E	T	52.7/32.4
D10	1720000791	S.VAR HVC321B1TRF-E	T	60.5/30
D11	1720000641	S.VAR 1SV284(TPH3,F)	T	52.7/33.6
D12	1720000641	S.VAR 1SV284(TPH3,F)	T	52.7/34.8
D13	1720000791	S.VAR HVC321B1TRF-E	T	63.8/28.6
D14	1720000791	S.VAR HVC321B1TRF-E	T	73.6/30.4
D15	1720000641	S.VAR 1SV284(TPH3,F)	T	63.8/31.3
D17	1720000791	S.VAR HVC321B1TRF-E	T	72.1/27.9
D18	1750000721	S.VAR HVC375BTRF-E	T	69.8/33.3
D19	1160000140	S.DIO DAP222 TL	B	120.5/17.8

[MAIN UNIT] (Other than "MDC compatible")

REF NO.	PARTS NO.	DESCRIPTION	M.	H/V LOCATION
D20	1720000471	S.VAR 1SV239(TPH3,F)	T	69.4/34.9
D21	1750001070	S.DIO DAN235ETL	T	36.3/38.3
D22	1750000520	S.DIO DAN222TL	T	124.7/54.5
D23	1790001261	S.DIO MA2S077G0L	T	125.6/39.2
D24	1790001261	S.DIO MA2S077G0L	B	50.7/53.2
D25	1790001261	S.DIO MA2S077G0L	B	49.3/50.8
D26	1750000711	S.VAR HVC350BTRF-E	B	17.7/36
D27	1750000711	S.VAR HVC350BTRF-E	B	16.2/36
D28	1750000370	S.DIO DA221 TL	T	10/37.5
D29	1790001251	S.DIO MA2S1110GL	T	12/39.5
D30	1750000721	S.VAR HVC375BTRF-E	B	8.6/44.7
D31	1790001251	S.DIO MA2S1110GL	T	8.5/43.7
D32	1750001080	S.DIO RB886G T2R	T	64.1/76.5
D33	1750001080	S.DIO RB886G T2R	T	65.8/75.8
D34	1750000721	S.VAR HVC375BTRF-E	B	8.6/47.4
D35	1790001621	S.DIO 1SV308(TPL3,F)	B	17.9/48.1
D36	1790001241	S.DIO MA2S7280GL [EXP-01]	B	16.5/48.1
	1790001241	S.DIO MA2S7280GL [EUR-01]		
D37	1750000370	S.DIO DA221 TL	T	75.5/67.6
D38	1750000511	S.DIO UX9401F-STD/TR <INT>[EXP-01]	T	30/66
	1750000511	S.DIO UX9401F-STD/TR <INT>[EUR-01]		
D39	1710001061	DIO L407CDB [USA-01] only		
D42	1750001360	S.DIO L709CER (9401)	T	34.6/58.7
D45	1750000520	S.DIO DAN222TL	T	91.8/57.5
D46	1750000520	S.DIO DAN222TL	T	89.6/57.5
D47	1790001211	S.DIO 1SS375-TL-E	B	29.2/63.8
D48	1750000520	S.DIO DAN222TL	B	93/61.5
D49	1790001211	S.DIO 1SS375-TL-E	B	6/52.8
D50	1750000370	S.DIO DA221 TL	B	97.2/65.8
D51	1790001211	S.DIO 1SS375-TL-E	B	3.9/79.7
D52	1750000520	S.DIO DAN222TL	B	132.5/41
D53	1790001251	S.DIO MA2S1110GL	B	133.3/47.3
D55	1750000370	S.DIO DA221 TL	B	108.8/57.4
D56	1750000370	S.DIO DA221 TL	T	108.8/60.6
D57	1750000370	S.DIO DA221 TL	B	95.1/65.8
D58	1750000520	S.DIO DAN222TL	T	94/57.5
D59	1750000520	S.DIO DAN222TL	B	104/80.4
D62	1790000700	DIO DSA3A1		
D63	1750000520	S.DIO DAN222TL	B	110.3/80.9
D65	1750000520	S.DIO DAN222TL	B	129.7/58.9
D66	1790001621	S.DIO 1SV308(TPL3,F)	T	33.9/38.8
D67	1790001621	S.DIO 1SV308(TPL3,F)	T	33.9/37.5
D68	1790001621	S.DIO 1SV308(TPL3,F)	T	29.9/23.2
D69	1790001621	S.DIO 1SV308(TPL3,F)	T	31.2/23.2
D70	1750000351	S.DIO 1SV252(TE85L,F)	T	73.6/75.5
D71	1730002411	S.ZEN MAZ8200GHL	T	118.3/86.3
D72	1750000520	S.DIO DAN222TL	T	87.4/57.5
D73	1750000520	S.DIO DAN222TL	B	93/64.5
FI1	2020001410	CER CFWLB450KGFA-B0 (CFWM450G)		
FI2	2020002470	S.CER CFWKA450KHFA001-R0	T	15.4/9.3
FI3	2030000500	S.MON DSF753SBF 46.35 MHz (FL-401)	T	24.7/28.4
FI4	2030000150	S.MON DSF753SB 46.350 MHz (FL-335)	T	35.6/28.4
FI5	2040001440	S.LC NFE31PT152Z1E9L (NFM60R20T152)	B	94.5/77
FI6	2040001440	S.LC NFE31PT152Z1E9L (NFM60R20T152)	B	94.5/73.7
FI7	2040001440	S.LC NFE31PT152Z1E9L (NFM60R20T152) [USA-01] only	B	94.5/70.3
X1	6050012380	S.XTA CR-826 DSA535SD 15.3 MHz	T	84.2/34.7
X2	6050011730	S.XTA CR-765 SMD-49TA 3.6864 MHz <KDS>	T	48.3/11.6
X3	6070000300	S.DIS JTBM450CX24 <JJE>	T	37.1/10.3
X4	6050012320	S.XTA CR-818 SMD-49 4.194304 MHz <KDS>	T	139.1/21.9
X5	6050011720	S.XTA CR-764 SMD-49TB 19.6608 MHz <KDS>	T	120.5/44.3
L1	6200004660	S.COI MLF1608A 1R8K-T	T	82.7/54.3
L2	6200003540	S.COI MLF1608D R22K-T	B	34.4/14.7
L3	6200004480	S.COI MLF1608D R82K-T	B	29.7/16.2
L4	6200007911	S.COI ELJRF 18NJFB	B	75.9/48.3
L5	6200007120	S.COI ELJND 1R0J	T	49.4/30.8
L6	6200007120	S.COI ELJND 1R0J	T	52.7/30.8
L7	6200007120	S.COI ELJND 1R0J	T	60.5/28.4
L8	6200007170	S.COI MLF1608A 3R3K-T	T	74/27.5
L9	6200007170	S.COI MLF1608A 3R3K-T	T	69.8/32
L10	6200010600	S.COI C6342A-67NG-A	T	51.2/39.2
L11	6200003640	S.COI MLF1608E 100K-T	T	48.3/33.6
L12	6200009910	S.COI C6342A-88NG-A	T	61.6/35.5
L13	6200007120	S.COI ELJND 1R0J	T	63.8/27
L14	6200003640	S.COI MLF1608E 100K-T	T	60/31.4
L15	6200012450	S.COI 0.25-1.9-8TL 73N (COAT) <COMO>	T	73.3/35.9
L16	6200008090	S.COI LQW2BHN68NJ03L	T	69.5/28
L17	6200003640	S.COI MLF1608E 100K-T	T	73.7/32.6
L18	6130003000	S.COI #617DB-1714=P3	B	39/36.2
L19	6130003000	S.COI #617DB-1714=P3	B	34.5/42.6
L20	6200009181	S.COI ELJRE R10JFA	T	57.3/48.3
L21	6200007911	S.COI ELJRF 18NJFB	B	66.3/51.2
L22	6200005721	S.COI ELJRE 33NGFA	B	40.6/48.1
L23	6200005721	S.COI ELJRE 33NGFA	B	45.5/48.1
L24	6130003000	S.COI #617DB-1714=P3	B	27/36.2

M.=Mounted side (T: Mounted on the Top side, B: Mounted on the Bottom side)
S.=Surface mount

[MAIN UNIT] (Other than "MDC compatible")

REF NO.	PARTS NO.	DESCRIPTION	M.	H/V LOCATION
L25	6200009151	S.COI ELJRE 82NJFA	B	54.2/53.4
L26	6200010720	S.COI C2520C-56NG-A	B	20.9/37
L27	6200009181	S.COI ELJRE R10JFA	B	66.5/69.4
L28	6200010720	S.COI C2520C-56NG-A	B	11.7/35.1
L29	6200009171	S.COI ELJRE 47NJFA	B	70.5/70.8
L30	6200009171	S.COI ELJRE 47NJFA	T	72.6/72.7
L31	6200010730	S.COI C2520C-68NG-A	B	7.8/41.5
L32	6200010730	S.COI C2520C-68NG-A	B	9.9/50.6
L33	6200010050	S.COI AS080547-47N	T	33.3/73.9
L34	6200007750	S.COI LQW2BHN56NJ03L	B	13.2/51.7
L35	6200006991	S.COI ELJRE 56NGFA	B	20.1/50.7
L36	6200010420	S.COI FHW1210HC 1R0JGT <JJE>	B	39.2/66
L37	6200010050	S.COI AS080547-47N	T	30/58.5
L38	6200010050	S.COI AS080547-47N	T	21.6/58
L39	6200010050	S.COI AS080547-47N	T	12.5/57.5
L40	6200010050	S.COI AS080547-47N	T	10.5/81
L41	6200002861	S.COI NLV25T-4R7J	T	122.3/54.4
L42	6200005011	S.COI NLV25T-100J	T	40.7/42.1
L43	6200010680	S.COI C2520C-R22G-A (0.22U)	T	42.1/34.9
L44	6200010740	S.COI C2520C-R27G-A	T	37.8/35.3
L45	6200003960	S.COI MLF1608A 1R0K-T	T	71.3/72.7
L46	6200005661	S.COI ELJRE 10NGFA	T	78.3/42.3
R1	7030005060	S.RES ERJ2GEJ 333 X (33K)	B	38.1/5.8
R2	7510001730	S.THE ERTJOEP 473J	T	90.4/35.6
R3	7030005050	S.RES ERJ2GEJ 103 X (10K)	T	79/11.9
R4	7030005700	S.RES ERJ2GEJ 274 X (270K)	B	88.5/18.9
R5	7030005090	S.RES ERJ2GEJ 104 X (100K)	T	90.4/34
R6	7030005160	S.RES ERJ2GEJ 105 X (1M)	T	84/19.4
R7	7030005230	S.RES ERJ2GEJ 334 X (330K)	T	84/17.5
R8	7410001130	S.ARR EXB28V102JX	T	86.1/52.4
R9	7030007570	S.RES ERJ2GEJ 122 X (1.2K)	B	34.3/11.6
R10	7030007060	S.RES ERJ2GEJ 684X (680K)	B	35.8/13.7
R11	7030010040	S.RES ERJ2GEJ-JPW	T	8.5/9.2
R12	7030004970	S.RES ERJ2GEJ 470 X (47)	T	31/17.2
R13	7030005600	S.RES ERJ2GEJ 273 X (27K)	T	8.8/15.9
R14	7030005210	S.RES ERJ2GEJ 822 X (8.2K)	T	7.5/7.4
R15	7030005070	S.RES ERJ2GEJ 683 X (68K)	B	93.3/14.4
R17	7030007570	S.RES ERJ2GEJ 122 X (1.2K)	B	93.3/15.3
R18	7030008300	S.RES ERJ2GEJ 184 X (180K)	B	79/11.8
R19	7030005230	S.RES ERJ2GEJ 334 X (330K)	T	89.3/9
R20	7030005090	S.RES ERJ2GEJ 104 X (100K)	T	85.6/8.3
R21	7030005070	S.RES ERJ2GEJ 683 X (68K)	T	86.6/8.3
R22	7030005050	S.RES ERJ2GEJ 103 X (10K)	B	38.1/7.5
R23	7030005050	S.RES ERJ2GEJ 103 X (10K)	B	38.1/9.2
R24	7030005060	S.RES ERJ2GEJ 333 X (33K)	B	37.2/10.5
R25	7030005120	S.RES ERJ2GEJ 102 X (1K)	B	100.9/51.4
R26	7030005000	S.RES ERJ2GEJ 471 X (470)	B	87.5/5.3
R27	7030007300	S.RES ERJ2GEJ 332 X (3.3K)	T	53.9/5.6
R28	7030010040	S.RES ERJ2GEJ-JPW	T	59.4/5.6
R29	7030005000	S.RES ERJ2GEJ 471 X (470)	T	116.4/14.5
R30	7030005170	S.RES ERJ2GEJ 474 X (470K)	B	37.2/9.2
R31	7030007340	S.RES ERJ2GEJ 153 X (15K)	B	36.3/9.2
R32	7030005720	S.RES ERJ2GEJ 563 X (56K)	B	37.2/7.5
R33	7030005160	S.RES ERJ2GEJ 105 X (1M)	T	80.7/8.4
R34	7030005040	S.RES ERJ2GEJ 472 X (4.7K)	T	80.7/7.2
R35	7030005120	S.RES ERJ2GEJ 102 X (1K)	T	77.6/9.5
R36	7030005030	S.RES ERJ2GEJ 152 X (1.5K)	B	27/14.7
R37	7030007300	S.RES ERJ2GEJ 332 X (3.3K)	B	15.2/8.6
R38	7030005210	S.RES ERJ2GEJ 822 X (8.2K)	T	22.9/6.2
R39	7030005600	S.RES ERJ2GEJ 273 X (27K)	T	24/9.1
R40	7030005170	S.RES ERJ2GEJ 474 X (470K)	T	25.9/10.6
R41	7030007290	S.RES ERJ2GEJ 222 X (2.2K)	T	27.6/6.2
R42	7030005090	S.RES ERJ2GEJ 104 X (100K)	B	94.8/11.7
R43	7030007300	S.RES ERJ2GEJ 332 X (3.3K)	B	94.8/10
R44	7030007340	S.RES ERJ2GEJ 153 X (15K)	B	90.7/11.9
R45	7030005220	S.RES ERJ2GEJ 223 X (22K)	B	92.8/10
R46	7030005040	S.RES ERJ2GEJ 472 X (4.7K)	T	92.1/14.1
R47	7030005050	S.RES ERJ2GEJ 103 X (10K)	T	92.1/13.1
R48	7030005060	S.RES ERJ2GEJ 333 X (33K)	B	50.9/8.6
R49	7030005160	S.RES ERJ2GEJ 105 X (1M)	B	49.7/13.7
R50	7030005090	S.RES ERJ2GEJ 104 X (100K)	B	49.7/11
R51	7030005210	S.RES ERJ2GEJ 822 X (8.2K)	T	52.4/7
R52	7030007340	S.RES ERJ2GEJ 153 X (15K)	T	59.1/12.5
R53	7030005000	S.RES ERJ2GEJ 471 X (470)	T	86.2/37.7
R54	7030010040	S.RES ERJ2GEJ-JPW	B	78.7/36.4
R55	7030005290	S.RES ERJ2GEJ 682 X (6.8K)	T	81.8/25.3
R56	7030005040	S.RES ERJ2GEJ 472 X (4.7K)	B	77.7/48.4
R57	7030005090	S.RES ERJ2GEJ 104 X (100K)	B	28.3/14.3
R58	7030005050	S.RES ERJ2GEJ 103 X (10K)	T	27.6/9
R59	7030005170	S.RES ERJ2GEJ 474 X (470K)	T	27.6/8.1
R60	7030005000	S.RES ERJ2GEJ 471 X (470)	T	30.9/10.2
R61	7030005040	S.RES ERJ2GEJ 472 X (4.7K)	T	28.8/8.5
R62	7030005040	S.RES ERJ2GEJ 472 X (4.7K)	B	32.2/11.9
R63	7030005220	S.RES ERJ2GEJ 223 X (22K)	B	92.8/8.3
R64	7030005220	S.RES ERJ2GEJ 223 X (22K)	B	92.8/6.5
R65	7030005090	S.RES ERJ2GEJ 104 X (100K)	B	50.9/9.5
R66	7030005050	S.RES ERJ2GEJ 103 X (10K)	T	86.6/11.8
R67	7030005210	S.RES ERJ2GEJ 822 X (8.2K)	T	53.4/7
R68	7030007290	S.RES ERJ2GEJ 222 X (2.2K)	B	53.7/17.9
R69	7030010040	S.RES ERJ2GEJ-JPW	T	85.6/13.6
R71	7030005090	S.RES ERJ2GEJ 104 X (100K)	T	57.7/6.3
R72	7030007290	S.RES ERJ2GEJ 222 X (2.2K)	T	64.9/55.6
R73	7030005000	S.RES ERJ2GEJ 471 X (470)	B	83.2/26.9
R74	7030007300	S.RES ERJ2GEJ 332 X (3.3K)	B	81.8/25.3
R75	7030009140	S.RES ERJ2GEJ 272 X (2.7K)	B	79.2/34
R76	7030007340	S.RES ERJ2GEJ 153 X (15K)	B	80.3/29.1
R77	7030005580	S.RES ERJ2GEJ 560 X (56)	T	78.2/47.2
R78	7030005070	S.RES ERJ2GEJ 683 X (68K)	B	81.5/34
R79	7030005040	S.RES ERJ2GEJ 472 X (4.7K)	B	74.8/50
R80	7030005040	S.RES ERJ2GEJ 472 X (4.7K)	B	70/50.9
R81	7030005110	S.RES ERJ2GEJ 224 X (220K)	B	55.5/31.4
R82	7030005110	S.RES ERJ2GEJ 224 X (220K)	B	66.3/33.3
R83	7030008400	S.RES ERJ2GEJ 182 X (1.8K)	T	32.6/10.2

[MAIN UNIT] (Other than "MDC compatible")

REF NO.	PARTS NO.	DESCRIPTION	M.	H/V LOCATION
R84	7030007280	S.RES ERJ2GEJ 331 X (330)	T	24.6/20.3
R85	7030005110	S.RES ERJ2GEJ 224 X (220K)	T	24.6/21.2
R86	7030007300	S.RES ERJ2GEJ 332 X (3.3K)	B	30/10.5
R87	7030007300	S.RES ERJ2GEJ 332 X (3.3K)	T	32.2/20.6
R88	7030005120	S.RES ERJ2GEJ 102 X (1K)	B	91.7/6.5
R90	7030005000	S.RES ERJ2GEJ 471 X (470)	B	89.4/18.9
R91	7030005700	S.RES ERJ2GEJ 274 X (270K)	T	85.6/11.8
R92	7030005090	S.RES ERJ2GEJ 104 X (100K)	T	87.3/13.4
R93	7030005310	S.RES ERJ2GEJ 124 X (120K)	T	83.9/8.2
R94	7030005080	S.RES ERJ2GEJ 823 X (82K)	T	108/34.7
R95	7030005720	S.RES ERJ2GEJ 563 X (56K)	T	108/33.8
R96	7030005240	S.RES ERJ2GEJ 473 X (47K)	B	63.7/15.5
R97	7030005060	S.RES ERJ2GEJ 333 X (33K)	B	53.3/16.6
R98	7030005040	S.RES ERJ2GEJ 472 X (4.7K)	B	62.1/19.4
R99	7030005240	S.RES ERJ2GEJ 473 X (47K)	B	60.2/19.4
R100	7030005030	S.RES ERJ2GEJ 152 X (1.5K)	B	77.9/34.4
R101	7030008280	S.RES ERJ2GEJ 271 X (270)	B	79.2/29.1
R102	7030005530	S.RES ERJ2GEJ 100 X (10)	T	23/20.3
R103	7030005600	S.RES ERJ2GEJ 273 X (27K)	B	29.9/23.8
R104	7030007280	S.RES ERJ2GEJ 331 X (330)	T	26.9/22.6
R105	7030005600	S.RES ERJ2GEJ 273 X (27K)	B	30.9/23.8
R106	7030007270	S.RES ERJ2GEJ 151 X (150)	T	34.3/22.5
R107	7030007340	S.RES ERJ2GEJ 153 X (15K)	B	129.7/52.3
R108	7030005240	S.RES ERJ2GEJ 473 X (47K)	B	82.3/18.9
R109	7030005700	S.RES ERJ2GEJ 274 X (270K)	B	81.3/18.9
R110	7030005050	S.RES ERJ2GEJ 103 X (10K)	T	78.4/20.2
R111	7030005050	S.RES ERJ2GEJ 103 X (10K)	T	95.9/28.3
R112	7030005700	S.RES ERJ2GEJ 274 X (270K)	T	80.8/20.1
R113	7030005240	S.RES ERJ2GEJ 473 X (47K)	B	57.9/19.4
R114	7030005090	S.RES ERJ2GEJ 104 X (100K)	B	53.7/13.3
R115	7030005090	S.RES ERJ2GEJ 104 X (100K)	T	114.4/18.4
R116	7030005090	S.RES ERJ2GEJ 104 X (100K)	B	85.3/7.3
R118	7030006610	S.RES ERJ2GEJ 394 X (390K)	T	89.5/11.7
R120	7030009280	S.RES ERJ2GEJ 391 X	T	30.3/34.3
R122	7030005600	S.RES ERJ2GEJ 273 X (27K)	T	32.3/35.2
R123	7030005600	S.RES ERJ2GEJ 273 X (27K)	T	33.5/35.2
R125	7030004970	S.RES ERJ2GEJ 470 X (47)	T	35/34
R127	7030005050	S.RES ERJ2GEJ 103 X (10K)	B	79.1/18.3
R128	7030008290	S.RES ERJ2GEJ 183 X (18K)	T	112.1/45.1
R129	7030005040	S.RES ERJ2GEJ 472 X (4.7K)	T	112.1/44.1
R130	7030005070	S.RES ERJ2GEJ 683 X (68K)	T	104.9/43.2
R131	7030005070	S.RES ERJ2GEJ 683 X (68K)	T	104.9/44.1
R132	7030004980	S.RES ERJ2GEJ 101 X (100)	T	114.4/17.5
R134	7030005160	S.RES ERJ2GEJ 105 X (1M)	T	128.9/26.3
R135	7030005160	S.RES ERJ2GEJ 105 X (1M)	T	128.9/25.3
R136	7030005160	S.RES ERJ2GEJ 105 X (1M)	T	128.9/24.2
R139	7410001140	S.ARR EXB28V104JX	T	130.6/20.6
R140	7030011000	S.RES RR0510P-392-D (3.9K)	T	48.1/47.2
R141	7030008340	S.RES RR0510P-182-D (1.8K)	T	50.8/45.4
R142	7030010040	S.RES ERJ2GEJ-JPW	T	49/47.2
R143	7030011000	S.RES RR0510P-392-D (3.9K)	T	58.7/42.2
R144	7030008340	S.RES RR0510P-182-D (1.8K)	T	61.7/40.4
R145	7030010040	S.RES ERJ2GEJ-JPW	T	59.6/42.2
R146	7030011000	S.RES RR0510P-392-D (3.9K)	T	71.8/45.8
R147	7030008340	S.RES RR0510P-182-D (1.8K)	T	70/41.9
R148	7030010040	S.RES ERJ2GEJ-JPW	T	71.8/44.9
R149	7030005310	S.RES ERJ2GEJ 124 X (120K)	T	69.1/36.3
R150	7030005240	S.RES ERJ2GEJ 473 X (47K)	T	89.8/15.5
R151	7030005060	S.RES ERJ2GEJ 333 X (33K)	T	91/16.1
R152	7030005090	S.RES ERJ2GEJ 104 X (100K)	T	88.9/16.4
R153	7030007300	S.RES ERJ2GEJ 332 X (3.3K)	T	39.9/32.2
R154	7030009530	S.RES ERJ2GEJ 270 X (27)	T	42.9/40.1
R155	7030005120	S.RES ERJ2GEJ 102 X (1K)	T	41.7/32.4
R156	7030004970	S.RES ERJ2GEJ 470 X (47)	T	42.5/41.3
R157	7030005090	S.RES ERJ2GEJ 104 X (100K)	B	33.7/23.6
R158	7030005240	S.RES ERJ2GEJ 473 X (47K)	T	112.1/42.3
R159	7030005240	S.RES ERJ2GEJ 473 X (47K)	T	112.1/40.5
R160	7030005240	S.RES ERJ2GEJ 473 X (47K)	T	113.8/38.7
R161	7030005070	S.RES ERJ2GEJ 683 X (68K)	T	104.9/46.8
R162	7030005240	S.RES ERJ2GEJ 473 X (47K)	T	128.2/14.4
R163	7030005240	S.RES ERJ2GEJ 473 X (47K)	T	128.7/16.3
R164	7030005240	S.RES ERJ2GEJ 473 X (47K)	T	129.4/14.4
R165	7030005230	S.RES ERJ2GEJ 334 X (330K)	T	128.7/17.8
R166	7030005230	S.RES ERJ2GEJ 334 X (330K)	T	128.7/18.7
R167	7030005230	S.RES ERJ2GEJ 334 X (330K)	T	129.8/16.2
R168	7030006581	S.RES ERA3YED 122V (1.2K)	T	53.6/47.5
R169	7030007230	S.RES ERA3YED 102V (1K)	T	63.8/42.6
R170	7030010390	S.RES ERA3YED 821V (820)	T	74.1/43.2
R171	7030005090	S.RES ERJ2GEJ 104 X (100K)	T	56.3/46.7
R172	7030008280	S.RES ERJ2GEJ 271 X (270)	B	36.4/46.4
R173	7030007270	S.RES ERJ2GEJ 151 X (150)	B	39/31.2
R174	7030004980	S.RES ERJ2GEJ 101 X (100)	B	34.6/38.7
R175	7030004980	S.RES ERJ2GEJ 101 X (100)	B	33/38.7
R176	7030005590	S.RES ERJ2GEJ 680 X (68)	B	31.3/37.4
R177	7030005590	S.RES ERJ2GEJ 680 X (68)	B	31.3/34.9
R178	7030005240	S.RES ERJ2GEJ 473 X (47K)	T	113.8/37.8
R179	7030008300	S.RES ERJ2GEJ 184 X (180K)	T	117.6/34.6
R180	7030005720	S.RES ERJ2GEJ 563 X (56K)	T	118.3/35.3
R181	7030005220	S.RES ERJ2GEJ 223 X (22K)	T	119/36
R182	7030005120	S.RES ERJ2GEJ 102 X (1K)	T	116.9/33.9
R183	7030005070	S.RES ERJ2GEJ 683 X (68K)	T	103.1/46.8
R184	7030005220	S.RES ERJ2GEJ 223 X (22K)	T	113.8/36.9
R185	7030005070	S.RES ERJ2GEJ 683 X (68K)	B	102.3/45.6
R186	7030005160	S.RES ERJ2GEJ 105 X (1M)	T	81.8/18.9
R187	7030005060	S.RES ERJ2GEJ 333 X (33K)	T	80.6/17.5
R188	7030005090	S.RES ERJ2GEJ 104 X (100K)	T	78.5/14.9
R189	7030005720	S.RES ERJ2GEJ 563 X (56K)	T	78.5/15.8
R190	7030007350	S.RES ERJ2GEJ 393 X (39K)	T	80.6/18.4
R191	7030004980	S.RES ERJ2GEJ 101 X (100)	T	60.5/47
R192	7030004980	S.RES ERJ2GEJ 101 X (100)	B	66.3/53.2
R193	7030005050	S.RES ERJ2GEJ 103 X (10K)	B	66.3/45.2
R194	7030005110	S.RES ERJ2GEJ 224 X (220K)	B	62.7/50.8
R195	7030009320	S.RES ERJ2GEJ 4R7 X (4.7)	B	55.8/50.3
R196	7030005120	S.RES ERJ2GEJ 102 X (1K)	B	65.2/42.8
R197	7030005050	S.RES ERJ2GEJ 103 X (10K)	B	64.7/44.5

M.=Mounted side (T: Mounted on the Top side, B: Mounted on the Bottom side)
S.=Surface mount

[MAIN UNIT] (Other than "MDC compatible")

REF NO.	PARTS NO.	DESCRIPTION	M.	H/V LOCATION
R198	7030010090	S.RES ERJ2GEJ 180 X (18)	B	36/47.6
R199	7030008280	S.RES ERJ2GEJ 271 X (270)	B	37.3/47.6
R200	7030005050	S.RES ERJ2GEJ 103 X (10K)	B	8.4/20.6
R201	7410001130	S.ARR EXB28V102JX	B	117/51.7
R202	7030005090	S.RES ERJ2GEJ 104 X (100K)	B	122.5/44.8
R203	7030005120	S.RES ERJ2GEJ 102 X (1K)	B	127.4/47.3
R204	7410000750	S.ARR EXB-V4V 104JV (100K)	B	129.6/42.7
R205	7030008010	S.RES ERJ2GEJ 123 X (12K)	T	127.5/40.1
R206	7030005120	S.RES ERJ2GEJ 102 X (1K)	B	127/39.5
R207	7030005050	S.RES ERJ2GEJ 103 X (10K)	T	120.9/37.5
R208	7030005050	S.RES ERJ2GEJ 103 X (10K)	T	121.6/38.2
R209	7410001130	S.ARR EXB28V102JX	B	125.8/40.8
R210	7030008010	S.RES ERJ2GEJ 123 X (12K)	T	124.2/38.4
R211	7030008010	S.RES ERJ2GEJ 123 X (12K)	T	125.9/41.1
R212	7030005160	S.RES ERJ2GEJ 105 X (1M)	T	122.1/41.1
R213	7030005090	S.RES ERJ2GEJ 104 X (100K)	B	55.3/51.8
R214	7030004980	S.RES ERJ2GEJ 101 X (100)	B	56.4/54
R215	7030005050	S.RES ERJ2GEJ 103 X (10K)	B	63.5/61.3
R216	7030005590	S.RES ERJ2GEJ 680 X (68)	B	61.9/62.3
R218	7030010040	S.RES ERJ2GEJ-JPW	B	56.4/51.8
R219	7030005050	S.RES ERJ2GEJ 103 X (10K)	B	46/49.8
R220	7030005040	S.RES ERJ2GEJ 472 X (4.7K)	B	49.3/52
R221	7030005050	S.RES ERJ2GEJ 103 X (10K)	B	44.4/49.8
R222	7030005090	S.RES ERJ2GEJ 104 X (100K)	B	17.7/33.9
R223	7030005090	S.RES ERJ2GEJ 104 X (100K)	B	16.2/33.9
R224	7030005050	S.RES ERJ2GEJ 103 X (10K)	B	15.7/32.7
R225	7030005000	S.RES ERJ2GEJ 471 X (470)	B	8/19.2
R226	7030004980	S.RES ERJ2GEJ 101 X (100)	T	109.7/53.5
R227	7030005090	S.RES ERJ2GEJ 104 X (100K)	B	107.1/49.3
R228	7410001140	S.ARR EXB28V104JX	T	103.3/49
R230	7030005050	S.RES ERJ2GEJ 103 X (10K)	B	124.7/42.7
R232	7030005530	S.RES ERJ2GEJ 100 X (10)	T	120.4/41.1
R233	7410000750	S.ARR EXB-V4V 104JV (100K)	T	130/34.7
R234	7410001130	S.ARR EXB28V102JX	B	129.4/34.4
R236	7030009530	S.RES ERJ2GEJ 270 X (27)	B	63.9/71.5
R237	7030005040	S.RES ERJ2GEJ 472 X (4.7K)	B	65.3/69.7
R238	7030008010	S.RES ERJ2GEJ 123 X (12K)	B	61.9/65.1
R240	7030005570	S.RES ERJ2GEJ 820 X (82)	B	62.4/67.4
R241	7030004980	S.RES ERJ2GEJ 101 X (100)	B	58.5/66
R242	7030004970	S.RES ERJ2GEJ 470 X (47)	T	12/33.1
R243	7030009320	S.RES ERJ2GEJ 4R7 X (4.7)	T	10/36
R244	7030005000	S.RES ERJ2GEJ 471 X (470)	B	15.1/36.3
R245	7030005530	S.RES ERJ2GEJ 100 X (10)	B	11.9/39.9
R246	7030005090	S.RES ERJ2GEJ 104 X (100K)	B	7.5/38.6
R247	7030004990	S.RES ERJ2GEJ 221 X (220)	B	7.7/36.3
R248	7410001130	S.ARR EXB28V102JX	B	103.9/47.9
R249	7410001130	S.ARR EXB28V102JX	B	123.9/27.6
R250	7410001130	S.ARR EXB28V102JX	B	122.1/25.7
R251	7410001140	S.ARR EXB28V104JX	T	124.7/28.7
R252	7410001140	S.ARR EXB28V104JX	T	122.1/25.7
R253	7030005720	S.RES ERJ2GEJ 563 X (56K)	T	9.5/40.5
R254	7030005050	S.RES ERJ2GEJ 103 X (10K)	T	7.4/42.2
R255	7030005310	S.RES ERJ2GEJ 124 X (120K)	B	6.6/38.6
R256	7030006610	S.RES ERJ2GEJ 394 X (390K)	T	13/41
R257	7030005040	S.RES ERJ2GEJ 472 X (4.7K)	T	9/42.2
R258	7030005170	S.RES ERJ2GEJ 474 X (470K)	T	11/44.5
R259	7030005090	S.RES ERJ2GEJ 104 X (100K)	B	6/45.1
R260	7030005090	S.RES ERJ2GEJ 104 X (100K)	B	6/47
R261	7410001130	S.ARR EXB28V102JX	B	99.7/43.5
R262	7410001130	S.ARR EXB28V102JX	T	100.2/37.4
R263	7410001130	S.ARR EXB28V102JX	B	97/40.7
R264	7410001140	S.ARR EXB28V104JX	T	103.8/37
R265	7030005050	S.RES ERJ2GEJ 103 X (10K)	T	103.8/39.2
R266	7410001130	S.ARR EXB28V102JX	B	120.1/23.5
R267	7410001130	S.ARR EXB28V102JX	B	118.3/21.7
R268	7410001130	S.ARR EXB28V102JX	B	116.5/19.9
R269	7030005090	S.RES ERJ2GEJ 104 X (100K)	T	119.4/20.8
R271	7030004980	S.RES ERJ2GEJ 101 X (100)	T	77.6/78.5
R272	7030007280	S.RES ERJ2GEJ 331 X (330)	T	61/76.5
R273	7030005050	S.RES ERJ2GEJ 103 X (10K) [EXP-01]	T	62.3/76.1
	7030005050	S.RES ERJ2GEJ 103 X (10K) [EUR-01]		
R274	7030004980	S.RES ERJ2GEJ 101 X (100)	T	56.7/69.3
R275	7030005030	S.RES ERJ2GEJ 152 X (1.5K)	T	64.8/73.8
R276	7030007300	S.RES ERJ2GEJ 332 X (3.3K) [USA-01]	T	65.8/73.8
	7030005040	S.RES ERJ2GEJ 472 X (4.7K) [EXP-01]		
	7030005040	S.RES ERJ2GEJ 472 X (4.7K) [EUR-01]		
R277	7030005050	S.RES ERJ2GEJ 103 X (10K)	B	4.8/45.6
R278	7030005050	S.RES ERJ2GEJ 103 X (10K)	T	132.2/29.9
R279	7030005090	S.RES ERJ2GEJ 104 X (100K)	T	131.3/29.9
R280	7410001130	S.ARR EXB28V102JX	B	95.2/38.9
R281	7030005090	S.RES ERJ2GEJ 104 X (100K)	T	93.7/48.8
R282	7410000750	S.ARR EXB-V4V 104JV (100K)	T	97.2/45.3
R283	7410001130	S.ARR EXB28V102JX	T	103.1/21.7
R284	7030005120	S.RES ERJ2GEJ 102 X (1K)	T	111.2/25.1
R285	7410001130	S.ARR EXB28V102JX	B	107.1/19.9
R286	7410001140	S.ARR EXB28V104JX	T	121.7/22.2
R287	7030005580	S.RES ERJ2GEJ 560 X (56) [USA-01]	T	55.7/72.6
	7030004990	S.RES ERJ2GEJ 221 X (220) [EXP-01]		
	7030004990	S.RES ERJ2GEJ 221 X (220) [EUR-01]		
R288	7030005100	S.RES ERJ2GEJ 154 X (150K)	T	54.1/68.2
R289	7030005170	S.RES ERJ2GEJ 474 X (470K) [USA-01] only	B	38/63.7
R290	7520000260	S.POS PRF18BB471QB1RB [USA-01] only	T	33.9/63
R291	7030005120	S.RES ERJ2GEJ 102 X (1K)	T	109.2/24.5
R292	7030006070	S.RES ERJ12YJ101U (100)	B	43.6/66.1
R293	7030005120	S.RES ERJ2GEJ 102 X (1K)	T	50.6/70.5
R294	7030005050	S.RES ERJ2GEJ 103 X (10K)	T	51.7/68.2
R295	7030008290	S.RES ERJ2GEJ 183 X (18K)	T	50.6/71.4
R296	7030005040	S.RES ERJ2GEJ 472 X (4.7K)	T	53.8/64.2
R297	7030008010	S.RES ERJ2GEJ 123 X (12K)	T	50.5/68.6
R298	7030005090	S.RES ERJ2GEJ 104 X (100K)	T	45.6/69.9
R300	7030005050	S.RES ERJ2GEJ 103 X (10K)	B	99.9/59.6
R301	7030007290	S.RES ERJ2GEJ 222 X (2.2K)	T	106.2/55.6
R302	7030000480	S.RES MCR10EZHJ 6.8K (682)	T	79/64.4

[MAIN UNIT] (Other than "MDC compatible")

REF NO.	PARTS NO.	DESCRIPTION	M.	H/V LOCATION
R303	7030000480	S.RES MCR10EZHJ 6.8K (682)	T	80.9/64.4
R304	7030000440	S.RES MCR10EZHJ 3.3K (332)	T	82.8/64.4
R305	7030005050	S.RES ERJ2GEJ 103 X (10K)	T	40.3/19.4
R306	7030005040	S.RES ERJ2GEJ 472 X (4.7K)	T	41/21.7
R307	7030005050	S.RES ERJ2GEJ 103 X (10K)	B	27/63
R309	7030005070	S.RES ERJ2GEJ 683 X (68K)	T	89.9/7.2
R310	7030004980	S.RES ERJ2GEJ 101 X (100)	B	109.3/62.8
R311	7030000220	S.RES MCR10EZHJ 47 (470)	B	15/76.9
R312	7030005700	S.RES ERJ2GEJ 274 X (270K)	B	31.5/62.4
R313	7030003370	S.RES ERJ3GEYJ 271 V (270)	B	8.6/54
R314	7030005600	S.RES ERJ2GEJ 273 X (27K)	B	3/53
R315	7030000220	S.RES MCR10EZHJ 47 (470)	B	3.5/57.4
R316	7030005170	S.RES ERJ2GEJ 474 X (470K)	T	90.8/11.3
R317	7030005160	S.RES ERJ2GEJ 105 X (1M)	B	108.3/83.7
R318	7030005160	S.RES ERJ2GEJ 105 X (1M)	B	112.5/82.7
R319	7030005120	S.RES ERJ2GEJ 102 X (1K)	B	112.1/81.5
R320	7030005160	S.RES ERJ2GEJ 105 X (1M)	B	107.2/82.4
R321	7030004970	S.RES ERJ2GEJ 470 X (47)	B	108.4/82
R322	7030005600	S.RES ERJ2GEJ 273 X (27K)	B	2.1/79.2
R323	7030003370	S.RES ERJ3GEYJ 271 V (270)	B	6.3/78.7
R324	7030000620	S.RES MCR10EZHJ 100 K (104)	B	5.6/85.5
R325	7030005050	S.RES ERJ2GEJ 103 X (10K)	B	130.5/45.2
R326	7030005090	S.RES ERJ2GEJ 104 X (100K)	B	131.8/51.7
R327	7030007290	S.RES ERJ2GEJ 222 X (2.2K)	B	131.1/54.2
R328	7030005090	S.RES ERJ2GEJ 104 X (100K)	B	134.2/51.7
R332	7030005090	S.RES ERJ2GEJ 104 X (100K)	T	109.6/27.9
R333	7030005120	S.RES ERJ2GEJ 102 X (1K)	T	109.6/26.9
R334	7030000100	S.RES MCR10EZHJ 4.7 (4R7)	T	101.4/79.7
R335	7030005050	S.RES ERJ2GEJ 103 X (10K)	T	101.8/83.9
R336	7030005120	S.RES ERJ2GEJ 102 X (1K)	T	111.3/78.5
R337	7410001130	S.ARR EXB28V102JX	T	104.6/75.9
R338	7030005651	S.RES ERA3YKD 304V (300K)	T	113.6/54.3
R339	7030005871	S.RES ERA3YKD 104V (100K)	T	113.6/52.9
R340	7030003560	S.RES ERJ3GEYJ 103 V (10K)	T	136.3/65.7
R341	7030003560	S.RES ERJ3GEYJ 103 V (10K)	B	130.7/85.9
R342	7030005090	S.RES ERJ2GEJ 104 X (100K)	B	135.4/52.2
R343	7030007290	S.RES ERJ2GEJ 222 X (2.2K)	B	138.2/49.4
R344	7030005110	S.RES ERJ2GEJ 224 X (220K)	B	133.3/54.6
R345	7030005110	S.RES ERJ2GEJ 224 X (220K)	B	133.3/56.3
R346	7030008410	S.RES ERJ2GEJ 392 X (3.9K)	B	137/52.2
R347	7030005050	S.RES ERJ2GEJ 103 X (10K)	B	137.8/53.7
R348	7030005700	S.RES ERJ2GEJ 274 X (270K)	B	129.1/77.2
R349	7030005090	S.RES ERJ2GEJ 104 X (100K)	B	127.8/77.7
R350	7030005120	S.RES ERJ2GEJ 102 X (1K)	B	139.1/47.8
R351	7030004980	S.RES ERJ2GEJ 101 X (100)	B	136.3/38.1
R352	7030008300	S.RES ERJ2GEJ 184 X (180K)	B	139.7/39
R353	7030005230	S.RES ERJ2GEJ 334 X (330K)	B	138.2/47.8
R354	7030010040	S.RES ERJ2GEJ-JPW	T	140.4/36
R355	7030008280	S.RES ERJ2GEJ 271 X (270)	B	139.7/34.3
R356	7540000290	ABS ERZV10D220		
R359	7030005090	S.RES ERJ2GEJ 104 X (100K)	B	114.8/82.9
R360	7030005090	S.RES ERJ2GEJ 104 X (100K)	T	80.6/5.3
R361	7030005600	S.RES ERJ2GEJ 273 X (27K)	T	78.4/5.3
R362	7030005050	S.RES ERJ2GEJ 103 X (10K)	T	124.8/50.2
R363	7030005120	S.RES ERJ2GEJ 102 X (1K)	T	42.9/38.3
R364	7030009140	S.RES ERJ2GEJ 272 X (2.7K)	T	42.9/37.4
R365	7030004970	S.RES ERJ2GEJ 470 X (47)	T	38.3/37.9
R366	7030005050	S.RES ERJ2GEJ 103 X (10K)	B	131.4/63.4
R367	7030005000	S.RES ERJ2GEJ 471 X (470)	B	130.1/63
R368	7030005050	S.RES ERJ2GEJ 103 X (10K)	T	78.3/7.6
R370	7030005010	S.RES ERJ2GEJ 681 X (680)	T	71.2/70.4
R371	7030005050	S.RES ERJ2GEJ 103 X (10K)	T	119.5/84.6
R372	7030005040	S.RES ERJ2GEJ 472 X (4.7K)	T	25.9/8.1
R373	7030005040	S.RES ERJ2GEJ 472 X (4.7K)	T	74/21.6
R375	7030005030	S.RES ERJ2GEJ 152 X (1.5K)	T	27.6/5.3
R376	7030005160	S.RES ERJ2GEJ 105 X (1M)	B	109.1/12.1
R377	7030005160	S.RES ERJ2GEJ 105 X (1M)	B	110.9/12.1
R378	7410001140	S.ARR EXB28V104JX	B	100.7/18.3
R379	7030005090	S.RES ERJ2GEJ 104 X (100K)	T	111.6/23.8
R386	7030005120	S.RES ERJ2GEJ 102 X (1K)	T	105.8/85.1
R387	7030005120	S.RES ERJ2GEJ 102 X (1K)	T	107.8/85.1
R389	7030005090	S.RES ERJ2GEJ 104 X (100K)	T	110.4/10.7
R390	7030005120	S.RES ERJ2GEJ 102 X (1K)	B	79.8/46.1
R391	7030005120	S.RES ERJ2GEJ 102 X (1K)	T	79.3/41.3
C1	4030017420	S.CER ECJ0EC1H470J	T	88.9/54.3
C2	4030017420	S.CER ECJ0EC1H470J	T	89.9/54.3
C3	4030017420	S.CER ECJ0EC1H470J	T	41.5/15.4
C4	4030017420	S.CER ECJ0EC1H470J	B	50/15
C5	4030017460	S.CER ECJ0EB1E102K	T	89.4/34
C6	4550007080	S.TAN TEESVA 1C 106M8R	T	80.8/55.1
C7	4030017420	S.CER ECJ0EC1H470J	T	84/18.4
C8	4030017420	S.CER ECJ0EC1H470J	T	89.9/52
C9	4030016930	S.CER ECJ0EB1A104K	T	88.9/52
C10	4030016930	S.CER ECJ0EB1A104K	T	80.6/50.7
C11	4030016930	S.CER ECJ0EB1A104K	T	10.9/18.8
C12	4030016930	S.CER ECJ0EB1A104K	T	8.5/7.4
C13	4030016930	S.CER ECJ0EB1A104K	T	85.6/10
C14	4030016930	S.CER ECJ0EB1A104K	T	86.6/10
C15	4030017460	S.CER ECJ0EB1E102K	T	41.5/7.7
C16	4550000460	S.TAN TEESVA 1C 105M8R	T	42.7/6.2
C17	4550000460	S.TAN TEESVA 1C 105M8R	B	42.7/6.2
C18	4030017420	S.CER ECJ0EC1H470J	T	41.5/14.5
C19	4030017420	S.CER ECJ0EC1H470J	B	50/15.9
C20	4030016970	S.CER ECJ0EB1C223K	B	100.9/52.3
C21	4030017420	S.CER ECJ0EC1H470J	T	41.5/13.5
C22	4030017420	S.CER ECJ0EC1H470J	T	41.5/12.6
C23	4030016930	S.CER ECJ0EB1A104K	T	51.8/5.6
C24	4030017420	S.CER ECJ0EC1H470J	B	39.8/9.8
C25	4030017420	S.CER ECJ0EC1H470J	T	61.4/6
C26	4030016930	S.CER ECJ0EB1A104K	B	37.2/5.8
C27	4030017760	S.CER ECJ0EB1H222K	B	36.3/7.5
C28	4030016790	S.CER ECJ0EB1C103K	T	79.3/7.6
C29	4030017460	S.CER ECJ0EB1E102K	T	79/13.6

M.=Mounted side (T: Mounted on the Top side, B: Mounted on the Bottom side)
S.=Surface mount

[MAIN UNIT] (Other than "MDC compatible")

REF NO.	PARTS NO.	DESCRIPTION	M.	H/V LOCATION
C30	4030016930	S.CER ECJ0EB1A104K	T	78.1/13.6
C31	4030017460	S.CER ECJ0EB1E102K	T	80.6/51.7
C32	4030017500	S.CER ECJ0EC1H560J	B	33.3/15.9
C33	4030016930	S.CER ECJ0EB1A104K	B	34.8/12.8
C34	4030017570	S.CER ECJ0EC1H040B	B	32.1/15.4
C35	4030017590	S.CER ECJ0EC1H070C	B	30.9/15.9
C36	4030016930	S.CER ECJ0EB1A104K	T	22.4/14.9
C37	4030017360	S.CER ECJ0EC1H030B	B	28.3/15.4
C38	4030016930	S.CER ECJ0EB1A104K	T	22/6.2
C39	4030016930	S.CER ECJ0EB1A104K	B	13.6/6.2
C40	4030016930	S.CER ECJ0EB1A104K	T	23.8/6.2
C41	4030016930	S.CER ECJ0EB1A104K	T	22/12.5
C42	4030016930	S.CER ECJ0EB1A104K	T	23/12.5
C43	4030017430	S.CER ECJ0EC1H101J	T	26.4/9.4
C44	4030017430	S.CER ECJ0EC1H101J	T	25.5/9.4
C45	4030017790	S.CER ECJ0EB1E682K	B	91.7/10
C46	4030016930	S.CER ECJ0EB1A104K	B	93.8/10
C47	4030016970	S.CER ECJ0EB1C223K	T	92.1/15.1
C48	4030017710	S.CER ECJ0EC1H181J	B	49.7/9.1
C49	4550007080	S.TAN TEESVA 1C 106M8R	T	52.1/15.4
C50	4030017460	S.CER ECJ0EB1E102K	T	54.3/12
C51	4030017400	S.CER ECJ0EC1H220J	T	47.8/19
C52	4030017400	S.CER ECJ0EC1H220J	T	44.7/7.8
C53	4030017900	S.CER ECJ0EB1C123K	T	59.1/10.6
C54	4030018080	S.CER ECJ0EB1H182K	T	59.1/11.5
C55	4030016790	S.CER ECJ0EB1C103K	T	64.5/57
C56	4030017620	S.CER ECJ0EC1H100C	T	87.7/35.5
C57	4030016930	S.CER ECJ0EB1A104K	T	80.1/36.7
C58	4030017430	S.CER ECJ0EC1H101J	T	85.2/38.6
C59	4030017460	S.CER ECJ0EB1E102K	T	81.8/24.3
C60	4030017420	S.CER ECJ0EC1H470J	T	82.9/41.5
C63	4030017620	S.CER ECJ0EC1H100C	T	84/39.1
C64	4030017780	S.CER ECJ0EB1E472K	T	81.3/41.3
C65	4030017460	S.CER ECJ0EB1E102K	T	27.6/10.6
C66	4550006050	S.TAN TEESVA 0J 106M8R	T	31.1/6.8
C67	4030017460	S.CER ECJ0EB1E102K	T	27.6/7.1
C68	4030017460	S.CER ECJ0EB1E102K	T	30.5/9
C69	4030017460	S.CER ECJ0EB1E102K	T	32.6/15.4
C70	4030017420	S.CER ECJ0EC1H470J	B	28.3/13.4
C71	4030016940	S.CER ECJ0EB1A393K	B	91.7/8.3
C72	4030018860	S.CER ECJ0EB0J105K	B	50.7/11
C73	4030017750	S.CER ECJ0EB1E122K	B	51.3/16.6
C74	4030016930	S.CER ECJ0EB1A104K	B	52.3/16.6
C75	4030016930	S.CER ECJ0EB1A104K	B	56.2/12.6
C77	4030017460	S.CER ECJ0EB1E102K	B	54.2/16.6
C78	4030017460	S.CER ECJ0EB1E102K	B	53.7/9
C79	4550007080	S.TAN TEESVA 1C 106M8R	T	66.5/55.3
C80	4030017780	S.CER ECJ0EB1E472K	B	79.2/35
C81	4550000460	S.TAN TEESVA 1C 105M8R	B	82.2/36.4
C82	4030017460	S.CER ECJ0EB1E102K	B	84.1/26.9
C83	4550000460	S.TAN TEESVA 1C 105M8R	B	84/32.5
C84	4030017460	S.CER ECJ0EB1E102K	T	78.2/48.8
C85	4030017380	S.CER ECJ0EC1H050B	B	77.1/47.2
C86	4030017350	S.CER ECJ0EC1H020B	B	74.8/48.3
C87	4030017580	S.CER ECJ0EC1H060C	B	73.7/48.3
C88	4030017380	S.CER ECJ0EC1H050B	B	72.4/48.6
C89	4030017580	S.CER ECJ0EC1H060C	B	71.1/49.1
C90	4030017350	S.CER ECJ0EC1H020B	B	70/49.1
C91	4030016790	S.CER ECJ0EB1C103K	T	27.3/17.3
C92	4030017460	S.CER ECJ0EB1E102K	T	25.2/22.4
C93	4030017680	S.CER ECJ0EC1H820J	T	32.6/12.6
C94	4030017460	S.CER ECJ0EB1E102K	B	27.8/12.5
C95	4030016790	S.CER ECJ0EB1C103K	T	28.9/20.1
C96	4030016930	S.CER ECJ0EB1A104K	B	32.8/8.1
C97	4030016930	S.CER ECJ0EB1A104K	B	29.6/9
C98	4030016930	S.CER ECJ0EB1A104K	B	89.3/7.3
C99	4030016930	S.CER ECJ0EB1A104K	B	90.7/14.8
C100	4030016930	S.CER ECJ0EB1A104K	T	87.3/14.3
C101	4030017710	S.CER ECJ0EC1H181J	T	83.9/7.2
C102	4030016930	S.CER ECJ0EB1A104K	T	108/32.8
C103	4030016930	S.CER ECJ0EB1A104K	B	55.3/19.3
C104	4550003250	S.TAN TEESVA 1V 474M8R	B	67.2/24.2
C105	4030017420	S.CER ECJ0EC1H470J	T	49.2/29.4
C106	4030017460	S.CER ECJ0EB1E102K	B	78/29.1
C107	4030016930	S.CER ECJ0EB1A104K	B	54.2/28.8
C109	4550006480	S.TAN TEESVA 1C 475M8R	B	56.1/27.7
C110	4030017420	S.CER ECJ0EC1H470J	T	60.1/27
C111	4030016930	S.CER ECJ0EB1A104K	B	66.3/30.3
C112	4030017460	S.CER ECJ0EB1E102K	B	67.4/30.3
C113	4030017420	S.CER ECJ0EC1H470J	T	72.1/26.6
C114	4030016790	S.CER ECJ0EB1C103K	T	24.3/22.4
C115	4030016790	S.CER ECJ0EB1C103K	T	23/21.2
C116	4030016790	S.CER ECJ0EB1C103K	T	28.5/22.6
C118	4030017640	S.CER ECJ0EC1H150J	T	20.5/28.7
C120	4030016790	S.CER ECJ0EB1C103K	T	32.6/22.5
C121	4030017570	S.CER ECJ0EC1H040B	T	34.8/23.5
C122	4030017390	S.CER ECJ0EC1H180J	T	39.8/28.9
C124	4030016930	S.CER ECJ0EB1A104K	B	90.3/18.9
C125	4030017460	S.CER ECJ0EB1E102K	B	128.5/52.6
C126	4030016930	S.CER ECJ0EB1A104K	T	79.6/20.6
C127	4030016930	S.CER ECJ0EB1A104K	B	82.8/20.1
C128	4030016930	S.CER ECJ0EB1A104K	T	78.4/19.3
C129	4030016930	S.CER ECJ0EB1A104K	B	63.7/16.4
C130	4030016930	S.CER ECJ0EB1A104K	B	135.6/25.4
C131	4030017660	S.CER ECJ0EC1H330J	T	135.9/25.7
C132	4030017660	S.CER ECJ0EC1H330J	T	135.9/18
C133	4030018010	S.CER ECJ0EC1H360J	T	48.1/35.5
C134	4030017640	S.CER ECJ0EC1H150J	T	49.4/34.8
C135	4030017660	S.CER ECJ0EC1H330J	T	64.1/32.5
C136	4030017340	S.CER ECJ0EC1H010B	T	71.1/30.8
C137	4030017570	S.CER ECJ0EC1H040B	T	71.1/29.9
C138	4030017730	S.CER ECJ0EB1E471K	T	71.9/33
C139	4030017390	S.CER ECJ0EC1H180J	T	62.1/32
C140	4030017360	S.CER ECJ0EC1H030B	T	72.5/30.7
C141	4030017360	S.CER ECJ0EC1H030B	T	72.1/29

[MAIN UNIT] (Other than "MDC compatible")

REF NO.	PARTS NO.	DESCRIPTION	M.	H/V LOCATION
C142	4030018860	S.CER ECJ0EB0J105K	T	89.5/12.7
C143	4030017400	S.CER ECJ0EC1H220J	T	71.3/36.6
C145	4030016790	S.CER ECJ0EB1C103K	T	31.4/35.2
C147	4030016790	S.CER ECJ0EB1C103K	T	34.5/35.2
C148	4030016790	S.CER ECJ0EB1C103K	T	30.9/26.4
C149	4030016930	S.CER ECJ0EB1A104K	B	78.2/17.4
C150	4030018560	S.CER C2012 JB 1A 475K-T	B	86.9/19.8
C151	4030016930	S.CER ECJ0EB1A104K	T	112.1/46
C152	4030016930	S.CER ECJ0EB1A104K	T	109.6/34.3
C153	4030017460	S.CER ECJ0EB1E102K	T	111.4/34.3
C154	4030018860	S.CER ECJ0EB0J105K	T	82.7/19.8
C155	4030017420	S.CER ECJ0EC1H470J	T	110.3/38.7
C156	4030017910	S.CER ECJ0EB1H152K	T	104.9/42.3
C157	4030017420	S.CER ECJ0EC1H470J	T	110.8/48.6
C158	4030017430	S.CER ECJ0EC1H101J	T	110.3/37.8
C159	4030017460	S.CER ECJ0EB1E102K	T	120.3/5.5
C160	4030017460	S.CER ECJ0EB1E102K	B	130.6/25.4
C161	4030018010	S.CER ECJ0EC1H360J	T	50.8/43.8
C162	4030017590	S.CER ECJ0EC1H070C	T	52.1/43.4
C163	4030017660	S.CER ECJ0EC1H330J	T	58.7/39.4
C164	4030017660	S.CER ECJ0EC1H330J	T	48.6/45.8
C165	4030017660	S.CER ECJ0EC1H330J	T	49.9/45.4
C166	4030017580	S.CER ECJ0EC1H060C	T	60.1/38.9
C167	4030017420	S.CER ECJ0EC1H470J	T	70/38.9
C168	4030017660	S.CER ECJ0EC1H330J	T	59.1/40.8
C169	4030017660	S.CER ECJ0EC1H330J	T	60.7/40.4
C170	4030017550	S.CER ECJ0EC1H1R5B	T	70.4/36.6
C171	4030017570	S.CER ECJ0EC1H040B	T	70/37.9
C172	4030017400	S.CER ECJ0EC1H220J	T	70/42.9
C173	4030017400	S.CER ECJ0EC1H220J	T	70/43.9
C174	4030017640	S.CER ECJ0EC1H150J	T	38.3/38.8
C175	4030016790	S.CER ECJ0EB1C103K	B	41.4/39.4
C176	4030016930	S.CER ECJ0EB1A104K	B	41/33.2
C177	4030017730	S.CER ECJ0EB1E471K	B	41/32.2
C178	4030016790	S.CER ECJ0EB1C103K	B	34.5/33
C180	4030017740	S.CER ECJ0EB1E821K	T	109.2/48.6
C181	4030016930	S.CER ECJ0EB1A104K	T	112.1/43.2
C182	4030016780	S.CER ECJ0EB1C153K	T	112.1/39.6
C183	4030017420	S.CER ECJ0EC1H470J	T	104.9/45
C184	4030017760	S.CER ECJ0EB1H222K	T	104.9/45.9
C185	4030017690	S.CER ECJ0EC1H121J	T	107.8/48.6
C186	4030016790	S.CER ECJ0EB1C103K	T	51.7/45.4
C187	4030017460	S.CER ECJ0EB1E102K	T	52.6/45.4
C188	4030016790	S.CER ECJ0EB1C103K	T	62.7/40.4
C189	4030017460	S.CER ECJ0EB1E102K	T	63.7/40.4
C190	4030017540	S.CER ECJ0EC1HR75B	T	55/48.3
C191	4030016790	S.CER ECJ0EB1C103K	T	70/40.9
C192	4030017540	S.CER ECJ0EC1HR75B	T	57.7/43
C193	4030017460	S.CER ECJ0EB1E102K	T	70/39.9
C194	4030017530	S.CER ECJ0EC1H0R5B	T	60/44.4
C195	4030016930	S.CER ECJ0EB1A104K	B	39/30
C196	4030017730	S.CER ECJ0EB1E471K	B	38.1/33.2
C197	4030016930	S.CER ECJ0EB1A104K	B	38.1/32.2
C198	4030017730	S.CER ECJ0EB1E471K	B	31.3/38.3
C199	4030016930	S.CER ECJ0EB1A104K	B	31.3/39.2
C200	4030016930	S.CER ECJ0EB1A104K	B	31.3/34
C201	4030017730	S.CER ECJ0EB1E471K	B	31.3/33.1
C202	4030017460	S.CER ECJ0EB1E102K	T	112.1/38.7
C203	4030017460	S.CER ECJ0EB1E102K	B	100.9/47
C205	4030018900	S.CER ECJ0EB0J474K	T	78.4/18.4
C206	4030016930	S.CER ECJ0EB1A104K	T	78.5/16.7
C207	4030017730	S.CER ECJ0EB1E471K	T	61/45.7
C208	4030017460	S.CER ECJ0EB1E102K	T	60/45.7
C209	4030017460	S.CER ECJ0EB1E102K	B	65/52.7
C210	4030017590	S.CER ECJ0EC1H070C	B	57.6/50.3
C211	4030017620	S.CER ECJ0EC1H100C	B	60/51.4
C212	4030017460	S.CER ECJ0EB1E102K	B	63.8/50.8
C214	4030017460	S.CER ECJ0EB1E102K	B	66.8/41.3
C215	4030017390	S.CER ECJ0EC1H180J	B	38.5/47.6
C216	4030017660	S.CER ECJ0EC1H330J	B	43.1/47.6
C217	4030017730	S.CER ECJ0EB1E471K	B	25/32.7
C218	4030016930	S.CER ECJ0EB1A104K	B	25/31.7
C219	4030017650	S.CER ECJ0EC1H270J	B	23/36.3
C220	4030017600	S.CER ECJ0EC1H080C	B	23/38
C221	4030016930	S.CER ECJ0EB1A104K	B	5.6/23.2
C222	4030017030	S.CER ECJ0EB1A273K	B	128.6/45.3
C223	4030016930	S.CER ECJ0EB1A104K	B	126.3/48.2
C224	4030017640	S.CER ECJ0EC1H150J	T	124.2/40.1
C225	4030016790	S.CER ECJ0EB1C103K	T	124.2/37.4
C226	4030017580	S.CER ECJ0EC1H060C	T	124.2/41.1
C227	4030017460	S.CER ECJ0EB1E102K	B	57.6/53.5
C228	4030017460	S.CER ECJ0EB1E102K	B	56.4/53.1
C229	4030017620	S.CER ECJ0EC1H100C	B	52.1/53.1
C230	4030017460	S.CER ECJ0EB1E102K	B	63.5/62.3
C231	4030017360	S.CER ECJ0EC1H030B	B	66.3/52.2
C232	4030017460	S.CER ECJ0EB1E102K	B	68.6/49.5
C235	4030017460	S.CER ECJ0EB1E102K	B	44.4/50.7
C236	4030017390	S.CER ECJ0EC1H180J	B	47.8/48.1
C237	4030017620	S.CER ECJ0EC1H100C	B	47.4/49.4
C240	4030017460	S.CER ECJ0EB1E102K	B	18.9/34.4
C241	4030017360	S.CER ECJ0EC1H030B	B	17/37.7
C242	4030017460	S.CER ECJ0EB1E102K	B	15/34.4
C243	4030017460	S.CER ECJ0EB1E102K	B	18.9/33.5
C244	4030017460	S.CER ECJ0EB1E102K	B	15.7/31.7
C245	4550006780	S.TAN TEESVB2 0J 476M8R	B	5.6/18.7
C246	4030016930	S.CER ECJ0EB1A104K	B	105.1/52.2
C247	4030016930	S.CER ECJ0EB1A104K	B	107/52.9
C248	4030016930	S.CER ECJ0EB1A104K	B	108.1/52
C249	4030018900	S.CER ECJ0EB0J474K	B	121.8/47.4
C250	4030017630	S.CER ECJ0EC1H120J	T	120.4/40.1
C251	4030017400	S.CER ECJ0EC1H220J	B	61.9/64.2
C252	4030017420	S.CER ECJ0EC1H470J	B	62.6/71.1
C253	4030017730	S.CER ECJ0EB1E471K	B	61.6/71.1
C254	4030017420	S.CER ECJ0EC1H470J	B	63.9/69.5
C256	4030017460	S.CER ECJ0EB1E102K	B	59.7/65.5

M.=Mounted side (T: Mounted on the Top side, B: Mounted on the Bottom side)
S.=Surface mount

[MAIN UNIT] (Other than "MDC compatible")

REF NO.	PARTS NO.	DESCRIPTION	M.	H/V LOCATION
C257	4030017460	S.CER ECJ0EB1E102K	B	63.4/67.4
C258	4030017460	S.CER ECJ0EB1E102K	T	13.9/32.5
C259	4030017460	S.CER ECJ0EB1E102K	T	10/35
C260	4030017590	S.CER ECJ0EC1H070C	B	14.2/36.3
C261	4030017460	S.CER ECJ0EB1E102K	B	9.5/33.9
C262	4030017460	S.CER ECJ0EB1E102K	B	13.7/37.7
C263	4030017490	S.CER C1608 JB 1A 105K-T	T	14.1/33.7
C264	4030017350	S.CER ECJ0EC1H020B	B	8.4/38.6
C265	4030017420	S.CER ECJ0EC1H470J	B	8.6/36.3
C266	4030017460	S.CER ECJ0EB1E102K	B	9.5/36.3
C267	4030017460	S.CER ECJ0EB1E102K	B	63.9/70.5
C268	4030017640	S.CER ECJ0EC1H150J	B	68.2/69.1
C269	4030017390	S.CER ECJ0EC1H180J [USA-01]	B	69.7/69.1
	4030017650	S.CER ECJ0EC1H270J [EXP-01]		
	4030017650	S.CER ECJ0EC1H270J [EUR-01]		
C270	4030017390	S.CER ECJ0EC1H180J	B	71.2/69
C271	4030017400	S.CER ECJ0EC1H220J [USA-01]	T	74.3/71.7
	4030017390	S.CER ECJ0EC1H180J [EXP-01]		
	4030017390	S.CER ECJ0EC1H180J [EUR-01]		
C272	4030016930	S.CER ECJ0EB1A104K	T	7.9/39.5
C273	4030016930	S.CER ECJ0EB1A104K	T	9.5/39.5
C274	4030017460	S.CER ECJ0EB1E102K	T	7.4/41.2
C275	4030016930	S.CER ECJ0EB1A104K	T	15/41
C276	4030017620	S.CER ECJ0EC1H100C	B	10.5/41
C277	4030017460	S.CER ECJ0EB1E102K	T	14/41
C278	4030017350	S.CER ECJ0EC1H020B	B	8.9/43.6
C279	4030017460	S.CER ECJ0EB1E102K	B	6.9/44.2
C280	4030017550	S.CER ECJ0EC1H1R5B	B	9.4/46.1
C281	4030017420	S.CER ECJ0EC1H470J	T	97.9/34.2
C282	4030017420	S.CER ECJ0EC1H470J	T	102.1/40
C283	4030017420	S.CER ECJ0EC1H470J	B	97.4/44.6
C284	4030017420	S.CER ECJ0EC1H470J	T	94.8/35.5
C285	4030017420	S.CER ECJ0EC1H470J	B	94.2/44.4
C286	4030017420	S.CER ECJ0EC1H470J	T	92.1/43.3
C287	4030017420	S.CER ECJ0EC1H470J	T	92.1/41.6
C288	4030017460	S.CER ECJ0EB1E102K	B	4.8/46.5
C290	4030017400	S.CER ECJ0EC1H220J	T	74.3/73.6
C291	4030017730	S.CER ECJ0EB1E471K	T	69.3/76.1
C292	4550000560	S.TAN TEESVA 1V 334M8R	T	67.6/74.4
C294	4030017420	S.CER ECJ0EC1H470J	T	70.4/76.1
C295	4030017420	S.CER ECJ0EC1H470J	T	56.7/67.3
C296	4510008530	S.ELE EEE1HA2R2SR	T	59.6/80
C297	4030017460	S.CER ECJ0EB1E102K	T	56.7/68.3
C299	4030017460	S.CER ECJ0EB1E102K	B	6.9/47.9
C300	4030017340	S.CER ECJ0EC1H010B	B	8.9/48.5
C301	4030017580	S.CER ECJ0EC1H060C	B	13.2/49.5
C302	4030017460	S.CER ECJ0EB1E102K	B	4.4/44.4
C303	4030016930	S.CER ECJ0EB1A104K	B	129.6/32
C304	4030017420	S.CER ECJ0EC1H470J	B	90/43.4
C305	4030011140	S.CER GRM31M2C2H120JV01L (GRM42-6 CH)	T	27.6/78.7
C306	4030011120	S.CER GRM31M2C2H100JV01L (GRM42-6 CH)	T	27.6/76.1
C307	4030011120	S.CER GRM31M2C2H100JV01L (GRM42-6 CH)	T	27.7/71.8
C308	4030011070	S.CER GRM31M2C2H5R0CY21L (GRM42-6 CH) [USA-01]	T	27.7/69.2
	4030011140	S.CER GRM31M2C2H120JV01L (GRM42-6 CH) [EXP-01]		
	4030011140	S.CER GRM31M2C2H120JV01L (GRM42-6 CH) [EUR-01]		
C309	4030017460	S.CER ECJ0EB1E102K	T	71.5/76.1
C310	4030017420	S.CER ECJ0EC1H470J	T	43/76.1
C311	4030017460	S.CER ECJ0EB1E102K	T	44.1/76.1
C312	4030017730	S.CER ECJ0EB1E471K	T	45.3/76.1
C313	4510008680	S.ELE EEE1EA220SP	T	51.7/77.7
C314	4030017730	S.CER ECJ0EB1E471K	B	40.2/68.3
C315	4030017460	S.CER ECJ0EB1E102K	T	55.7/73.6
C316	4030016790	S.CER ECJ0EB1C103K	T	54.1/72.6
C317	4030011600	S.CER C1608 JB 1E 104K-T	T	54.1/67
C318	4030017460	S.CER ECJ0EB1E102K [USA-01] only	T	35.1/63.3
C319	4030017460	S.CER ECJ0EB1E102K [USA-01] only	T	47.3/67.4
C320	4030017580	S.CER ECJ0EC1H060C	B	15/52.7
C321	4030017460	S.CER ECJ0EB1E102K	B	14.9/49.5
C322	4030017600	S.CER ECJ0EC1H080C	B	19.3/52
C323	4030017570	S.CER ECJ0EC1H040B	B	20/49.6
C324	4030017420	S.CER ECJ0EC1H470J	B	90/41.8
C325	4030017460	S.CER ECJ0EB1E102K	T	72.5/64.9
C326	4030017420	S.CER ECJ0EC1H470J	B	46.2/64.3
C327	4030017460	S.CER ECJ0EB1E102K	B	84.2/79
C328	4030017460	S.CER ECJ0EB1E102K	B	83.2/79
C329	4030017460	S.CER ECJ0EB1E102K	B	82.1/79
C330	4030017460	S.CER ECJ0EB1E102K	B	81/79
C331	4030017460	S.CER ECJ0EB1E102K	B	80/79
C332	4030016930	S.CER ECJ0EB1A104K	T	51.9/71.9
C334	4030017460	S.CER ECJ0EB1E102K	T	49.5/68.6
C335	4030017460	S.CER ECJ0EB1E102K	T	53.8/63.2
C336	4030017580	S.CER ECJ0EC1H060C	B	20.8/52
C337	4030017390	S.CER ECJ0EC1H180J	B	25.1/51.2
C338	4510008600	S.ELE EEE1CA4R7NR	T	79.1/69.1
C339	4030017460	S.CER ECJ0EB1E102K	T	79.1/62.1
C340	4030017460	S.CER ECJ0EB1E102K	T	37.5/20.8
C341	4030016790	S.CER ECJ0EB1C103K	T	41.9/19.4
C342	4030017200	S.CER GRM31BR32J102KY01L	T	25.3/62.5
C343	4030011270	S.CER GRM31M2C2H200JV01L (GRM42-6 CH)	T	22.1/63.9
C345	4030011170	S.CER GRM31M2C2H180JV01L (GRM42-6 CH)	T	17.3/57.4
C346	4030011170	S.CER GRM31M2C2H180JV01L (GRM42-6 CH)	T	30.2/62.8
C347	4030017520	S.CER ECJ0EC1H0R3B	B	25.4/63
C348	4030017460	S.CER ECJ0EB1E102K	B	31.5/63.4
C349	4030016930	S.CER ECJ0EB1A104K	T	100.5/63.5
C350	4550005980	S.TAN TEESVA 1A 475M8R	T	101.6/62
C351	4030018860	S.CER ECJ0EB0J105K	T	110.6/67.4

[MAIN UNIT] (Other than "MDC compatible")

REF NO.	PARTS NO.	DESCRIPTION	M.	H/V LOCATION
C352	4030017460	S.CER ECJ0EB1E102K	B	124.6/59.6
C353	4550005980	S.TAN TEESVA 1A 475M8R	B	124.5/61.3
C354	4550006250	S.TAN TEESVA 1A 106M8R	B	112.9/61.7
C355	4030017420	S.CER ECJ0EC1H470J	B	112.6/60.1
C356	4030011270	S.CER GRM31M2C2H200JV01L (GRM42-6 CH)	T	14.7/62.9
C357	4030011270	S.CER GRM31M2C2H200JV01L (GRM42-6 CH)	T	10.4/62.9
C358	4030007030	S.CER C1608 CH 1H 150J-T	B	10.6/56.4
C359	4030011340	S.CER C1608 CH 1H 471J-T	B	9.4/56.4
C360	4030017460	S.CER ECJ0EB1E102K	B	4/53
C361	4030017460	S.CER ECJ0EB1E102K	T	103.9/53.5
C362	4030017460	S.CER ECJ0EB1E102K	T	108.2/24.5
C363	4510008540	S.ELE EEE1CA100SR	T	139.1/31.9
C365	4550007650	S.TAN F931V105MAABMA	B	106.7/65
C366	4550007650	S.TAN F931V105MAABMA	B	104.2/65
C367	4550007650	S.TAN F931V105MAABMA	B	101.6/65
C368	4550007650	S.TAN F931V105MAABMA	B	99.5/64.6
C369	4030011270	S.CER GRM31M2C2H200JV01L (GRM42-6 CH)	T	15.8/78.9
C370	4030011270	S.CER GRM31M2C2H200JV01L (GRM42-6 CH)	T	15.8/83.1
C371	4030017460	S.CER ECJ0EB1E102K	B	4.1/81.6
C372	4030006850	S.CER C1608 JB 1H 471K-T	B	8.3/77.1
C373	4030016930	S.CER ECJ0EB1A104K	B	130.9/51.7
C374	4030016930	S.CER ECJ0EB1A104K	B	133/51.3
C375	4030016930	S.CER ECJ0EB1A104K	B	132.4/54.6
C377	4030017460	S.CER ECJ0EB1E102K	T	105.9/51.9
C378	4030017460	S.CER ECJ0EB1E102K	T	108.2/78
C379	4030016930	S.CER ECJ0EB1A104K	B	108.4/80.3
C380	4030017460	S.CER ECJ0EB1E102K	B	120.5/83.2
C381	4030016790	S.CER ECJ0EB1C103K	B	135.9/70.5
C383	4030017460	S.CER ECJ0EB1E102K	B	135.9/71.5
C384	4510008870	S.ELE EEE1AA471UP	T	129.9/64.9
C386	4030016930	S.CER ECJ0EB1A104K	B	138.8/53.7
C387	4030017720	S.CER ECJ0EB1H331K	B	135.4/51.3
C388	4030018860	S.CER ECJ0EB0J105K	B	138.6/52.2
C389	4030016930	S.CER ECJ0EB1A104K	B	139.1/49.4
C390	4030016930	S.CER ECJ0EB1A104K	B	137.8/55.4
C391	4030016930	S.CER ECJ0EB1A104K	T	101.8/82.3
C392	4030017460	S.CER ECJ0EB1E102K	B	127.8/76.8
C393	4030017460	S.CER ECJ0EB1E102K	B	99/79
C394	4030017420	S.CER ECJ0EC1H470J	B	115.4/68
C395	4030017460	S.CER ECJ0EB1E102K	B	126.5/77.1
C397	4030017460	S.CER ECJ0EB1E102K	B	99.8/86.3
C398	4030017420	S.CER ECJ0EC1H470J	B	100.8/86.3
C399	4030018860	S.CER ECJ0EB0J105K	B	136.3/37.1
C400	4030016930	S.CER ECJ0EB1A104K	B	139.7/35.3
C411	4510008780	S.ELE EEE1EA471P	T	117.2/63.6
C412	4510008780	S.ELE EEE1EA471P	T	132.7/54.3
C413	4030018900	S.CER ECJ0EB0J474K	B	135.1/46.8
C414	4510008540	S.ELE EEE1CA100SR	T	118.7/50.5
C415	4030016930	S.CER ECJ0EB1A104K	B	103/23.8
C416	4030016930	S.CER ECJ0EB1A104K	B	120.3/51.6
C417	4030016790	S.CER ECJ0EB1C103K	B	115.6/52.8
C418	4030017460	S.CER ECJ0EB1E102K	T	109.6/54.5
C419	4030016790	S.CER ECJ0EB1C103K	T	42.9/39.2
C420	4030017500	S.CER ECJ0EC1H560J	T	41/37.4
C421	4030016930	S.CER ECJ0EB1A104K	B	36/24.7
C422	4030016790	S.CER ECJ0EB1C103K	T	43.1/31.9
C423	4030018010	S.CER ECJ0EC1H360J	T	39.9/35.3
C424	4030016930	S.CER ECJ0EB1A104K	T	38.9/32.2
C425	4030017460	S.CER ECJ0EB1E102K	B	134.8/66.1
C426	4030018860	S.CER ECJ0EB0J105K	B	110/12.1
C427	4030017460	S.CER ECJ0EB1E102K	B	109.1/10.4
C430	4030017570	S.CER ECJ0EC1H040B	T	78.2/44.8
J1	6510026770	S.CON AXK540147YG	T	124.5/9.7
J2	6510026770	S.CON AXK540147YG	T	101.5/9.7
J3	6510021301	S.CON 52365-1071	T	90.3/62.6
J5	6510023092	S.CON 20FLT-SM2-TB(LF)(SN)(M)	T	108.3/81.8
J7	6450000140	CON HSJ0807-01-010		
J10	6510023092	S.CON 20FLT-SM2-TB(LF)(SN)(M)	T	71/7
W1	7120000470	JUM ERDS2T0		
W2	8900016250	CAB OPC-1701 <CMI>		
EP1	6910015600	S.BEA ACZ1005Y-241 (240)	B	39.8/8.1
EP2	6910015370	S.BEA ACZ1005Y-102-T	B	50.1/12.4
EP3	6910015370	S.BEA ACZ1005Y-102-T	T	82.6/37.1
EP4	6910010280	BEA HF70BB9.5X10.4X4.9		
EP5	6910010280	BEA HF70BB9.5X10.4X4.9		
EP6	6910011560	BEA HF70BB4.5X5X1.6		

M.=Mounted side (T: Mounted on the Top side, B: Mounted on the Bottom side)
S.=Surface mount

[FRONT UNIT]

REF NO.	PARTS NO.	DESCRIPTION		M.	H/V LOCATION
IC501	1130009121	S.IC	S1D15206F00A200	B	33.1/19.5
IC502	1110005771	S.IC	S-80942CNMC-G9CT2G	B	61.4/9.7
IC503	1140010771	S.IC	HD64F3687FPV(EMPTY)	B	62.1/25.2
IC504	1130007111	S.IC	TC7W04FU(TE12L,F)	B	73.9/26.3
IC505	1110005310	S.IC	AN6123MS	B	10/8.4
IC506	1110005350	S.IC	NJM2870F05-TE1-#FZZB	B	84.9/9.9
IC507	1130006221	S.IC	TC4W53FU(TE12L,F)	B	6.5/19
IC508	1130008561	S.IC	TC75S51F(TE85L,F)	B	74/11.3
Q501	1590001050	S.TRA	DTC114TUA T106	B	15.1/32.9
Q502	1590001050	S.TRA	DTC114TUA T106	B	18/32.9
Q503	1590001330	S.TRA	DTA114EUA T106	B	77/24.7
Q504	1530002851	S.TRA	2SC4116-BL(TE85R,F)	B	91.5/22.4
Q505	1590001050	S.TRA	DTC114TUA T106	B	92.5/18.8
Q506	1590000680	S.TRA	DTC114EUA T106	B	77/27.4
Q507	1590001050	S.TRA	DTC114TUA T106	B	51.4/30.2
D501	1750000370	S.DIO	DA221 TL	T	3.5/27.1
D502	1750000370	S.DIO	DA221 TL	T	3.5/25
D503	1750000370	S.DIO	DA221 TL	T	3.5/22.9
D504	1790001261	S.DIO	MA2S077G0L	B	50.9/23.1
D505	1790001251	S.DIO	MA2S1110GL	B	3.3/23.3
D506	1790001251	S.DIO	MA2S1110GL	B	82.1/21.7
D507	1790001251	S.DIO	MA2S1110GL	B	79.7/25.8
D508	1790000951	S.ZEN	MAZ8056GML	T	4.8/19.7
D509	1790000951	S.ZEN	MAZ8056GML	T	8.6/19.7
D510	1790000951	S.ZEN	MAZ8056GML	T	10.4/19.7
X501	6050011720	S.XTA	CR-764 SMD-49TB 19.6608 MHz <KDS>	B	49.6/18.9
L501	6200003640	S.COI	MLF1608E 100K-T	B	12/19.1
R501	7030003810	S.RES	ERJ3GEYJ 125 V (1.2M)	B	46/28.8
R502	7030003810	S.RES	ERJ3GEYJ 125 V (1.2M)	B	46.6/23.8
R503	7310005510	S.TRI	TMC3ADCS5X (470K)	B	45.5/26.3
R504	7030005120	S.RES	ERJ2GEJ 102 X (1K)	B	8/29.3
R505	7030005120	S.RES	ERJ2GEJ 102 X (1K)	B	10/29.3
R506	7030005120	S.RES	ERJ2GEJ 102 X (1K)	B	12/29.3
R507	7030005010	S.RES	ERJ2GEJ 681 X (680)	T	14.3/37.2
R508	7030005120	S.RES	ERJ2GEJ 102 X (1K)	T	14.3/36.3
R509	7510001730	S.THE	ERTJOEP 473J	B	59.9/17.1
R510	7030005120	S.RES	ERJ2GEJ 102 X (1K)	B	61.1/17.1
R511	7030005530	S.RES	ERJ2GEJ 100 X (10)	B	57.1/19.4
R512	7030008010	S.RES	ERJ2GEJ 123 X (12K)	B	52/22.7
R513	7030005050	S.RES	ERJ2GEJ 103 X (10K)	B	63.8/10.2
R514	7030005160	S.RES	ERJ2GEJ 105 X (1M)	B	56.1/20.7
R515	7030008010	S.RES	ERJ2GEJ 123 X (12K)	B	52.3/23.9
R516	7030008010	S.RES	ERJ2GEJ 123 X (12K)	B	49.5/23.9
R517	7410001140	S.ARR	EXB28V104JX	B	66.5/10.8
R518	7410001140	S.ARR	EXB28V104JX	B	67.5/19.2
R519	7030005090	S.RES	ERJ2GEJ 104 X (100K)	B	51.5/26.9
R520	7030005090	S.RES	ERJ2GEJ 104 X (100K)	B	71.6/26.8
R522	7030005090	S.RES	ERJ2GEJ 104 X (100K)	T	3.3/17.2
R523	7030004980	S.RES	ERJ2GEJ 101 X (100)	B	13.2/10.9
R524	7030005090	S.RES	ERJ2GEJ 104 X (100K)	B	71.6/28.4
R525	7030005240	S.RES	ERJ2GEJ 473 X (47K)	B	80.2/27
R526	7030007300	S.RES	ERJ2GEJ 332 X (3.3K)	B	79/24.4
R528	7030005090	S.RES	ERJ2GEJ 104 X (100K)	B	71.7/24.1
R529	7030005090	S.RES	ERJ2GEJ 104 X (100K)	B	82.1/19.6
R530	7030005160	S.RES	ERJ2GEJ 105 X (1M)	B	5.4/10
R531	7030009280	S.RES	ERJ2GEJ 391 X	B	92/20.6
R532	7030005120	S.RES	ERJ2GEJ 102 X (1K)	B	91.4/24.2
R533	7030007290	S.RES	ERJ2GEJ 222 X (2.2K)	B	91.4/25.2
R534	7030009140	S.RES	ERJ2GEJ 272 X (2.7K)	B	90.6/20.2
R535	7030005090	S.RES	ERJ2GEJ 104 X (100K)	B	82.4/31.4
R536	7030005050	S.RES	ERJ2GEJ 103 X (10K)	B	77.8/22.9
R537	7030005090	S.RES	ERJ2GEJ 104 X (100K)	T	7.2/19.2
R538	7030005090	S.RES	ERJ2GEJ 104 X (100K)	T	6.2/19.2
R539	7030010040	S.RES	ERJ2GEJ-JPW	B	76/15.9
R540	7030009290	S.RES	ERJ2GEJ 562 X (5.6K)	B	4.3/10.9
R541	7030007290	S.RES	ERJ2GEJ 222 X (2.2K)	B	3.3/16.6
R542	7030009160	S.RES	ERJ2GEJ 181 X (180)	B	89.8/24.2
R543	7030009160	S.RES	ERJ2GEJ 181 X (180)	B	89.8/25.2
R545	7030005240	S.RES	ERJ2GEJ 473 X (47K)	T	11.8/19.2
R546	7210003050	VAR	EVU-F2KFK3 B14 (10KB)		
R547	7030005120	S.RES	ERJ2GEJ 102 X (1K)	T	11.8/17.2
R548	7030005120	S.RES	ERJ2GEJ 102 X (1K)	T	6.8/17.2
R549	7030005120	S.RES	ERJ2GEJ 102 X (1K)	T	9.3/17.2
R550	7030005240	S.RES	ERJ2GEJ 473 X (47K)	B	10.9/19.4
R551	7030007300	S.RES	ERJ2GEJ 332 X (3.3K)	B	11/5.8
R552	7030009280	S.RES	ERJ2GEJ 391 X	B	10.1/5.8
R553	7030007290	S.RES	ERJ2GEJ 222 X (2.2K)	B	75.2/8.7
R554	7030007290	S.RES	ERJ2GEJ 222 X (2.2K) [USA-01]	B	71.4/12.4
	7030007290	S.RES	ERJ2GEJ 222 X (2.2K) [EXP-01]		
	7030007290	S.RES	ERJ2GEJ 222 X (2.2K) [EUR-01]		
	7030009140	S.RES	ERJ2GEJ 272 X (2.7K) [USA-02]		
	7030009140	S.RES	ERJ2GEJ 272 X (2.7K) [EXP-02]		
	7030009140	S.RES	ERJ2GEJ 272 X (2.7K) [EUR-02]		
	7030009140	S.RES	ERJ2GEJ 272 X (2.7K) [USA-01]		
	7030009140	S.RES	ERJ2GEJ 272 X (2.7K) [EUR-03]		
	7030009140	S.RES	ERJ2GEJ 272 X (2.7K) [CHN-01]		
	7030009140	S.RES	ERJ2GEJ 272 X (2.7K) [USA-11]		
	7030009140	S.RES	ERJ2GEJ 272 X (2.7K) [USA-12]		

[FRONT UNIT]

REF NO.	PARTS NO.	DESCRIPTION		M.	H/V LOCATION
R555	7030005220	S.RES	ERJ2GEJ 223 X (22K) [USA-01]	B	71.4/11.5
	7030005220	S.RES	ERJ2GEJ 223 X (22K) [EXP-01]		
	7030005220	S.RES	ERJ2GEJ 223 X (22K) [EUR-01]		
	7030008290	S.RES	ERJ2GEJ 183 X (18K) [USA-02]		
	7030008290	S.RES	ERJ2GEJ 183 X (18K) [EXP-02]		
	7030008290	S.RES	ERJ2GEJ 183 X (18K) [EUR-02]		
	7030008290	S.RES	ERJ2GEJ 183 X (18K) [USA-01]		
	7030008290	S.RES	ERJ2GEJ 183 X (18K) [EUR-03]		
	7030008290	S.RES	ERJ2GEJ 183 X (18K) [CHN-01]		
	7030008290	S.RES	ERJ2GEJ 183 X (18K) [USA-11]		
	7030008290	S.RES	ERJ2GEJ 183 X (18K) [USA-12]		
R556	7030005050	S.RES	ERJ2GEJ 103 X (10K)	B	73.2/8.7
R557	7030005050	S.RES	ERJ2GEJ 103 X (10K)	B	71.8/10.2
R558	7030005060	S.RES	ERJ2GEJ 333 X (33K) [USA-01]	B	74/13.5
	7030005060	S.RES	ERJ2GEJ 333 X (33K) [EXP-01]		
	7030005060	S.RES	ERJ2GEJ 333 X (33K) [EUR-01]		
	7030008010	S.RES	ERJ2GEJ 123 X (12K) [USA-02]		
	7030008010	S.RES	ERJ2GEJ 123 X (12K) [EXP-02]		
	7030008010	S.RES	ERJ2GEJ 123 X (12K) [EUR-02]		
	7030008010	S.RES	ERJ2GEJ 123 X (12K) [USA-01]		
	7030008010	S.RES	ERJ2GEJ 123 X (12K) [EUR-03]		
	7030008010	S.RES	ERJ2GEJ 123 X (12K) [CHN-01]		
	7030008010	S.RES	ERJ2GEJ 123 X (12K) [USA-11]		
	7030008010	S.RES	ERJ2GEJ 123 X (12K) [USA-12]		
R559	7030005090	S.RES	ERJ2GEJ 104 X (100K)	B	11/20.8
R560	7030005090	S.RES	ERJ2GEJ 104 X (100K)	T	6.2/20.8
C501	4030016930	S.CER	ECJ0EB1A104K	B	41.8/30.2
C502	4030016930	S.CER	ECJ0EB1A104K	B	40.9/30.2
C503	4030016930	S.CER	ECJ0EB1A104K	B	42.7/30.2
C504	4030016930	S.CER	ECJ0EB1A104K	B	43.6/30.2
C505	4030016930	S.CER	ECJ0EB1A104K	B	44.5/30.2
C506	4030017490	S.CER	C1608 JB 1A 105K-T	B	44.7/23.2
C507	4030017460	S.CER	ECJ0EB1E102K	B	46.1/22.7
C508	4030017490	S.CER	C1608 JB 1A 105K-T	B	43.4/23.2
C509	4030017730	S.CER	ECJ0EB1E471K	B	13.1/33.3
C510	4030017730	S.CER	ECJ0EB1E471K	B	18.6/30.5
C511	4030016790	S.CER	ECJ0EB1C103K	B	58.3/17.1
C512	4030016930	S.CER	ECJ0EB1A104K	B	62/17.1
C513	4030017030	S.CER	ECJ0EB1A273K	B	59.1/10.2
C514	4030016930	S.CER	ECJ0EB1A104K	B	58.3/18.3
C515	4030017630	S.CER	ECJ0EC1H120J	B	57.1/17.8
C516	4030017580	S.CER	ECJ0EC1H060C	B	48.9/22.7
C517	4030016790	S.CER	ECJ0EB1C103K	B	52.9/22.7
C518	4030017640	S.CER	ECJ0EC1H150J	B	49.8/22.7
C519	4030016930	S.CER	ECJ0EB1A104K	B	53.8/22.7
C520	4030017420	S.CER	ECJ0EC1H470J	T	12.5/36.3
C521	4030017460	S.CER	ECJ0EB1E102K	B	78.8/27.5
C522	4550006480	S.TAN	TEESVA 1C 475M8R	B	87.7/9.8
C523	4550006250	S.TAN	TEESVA 1A 106M8R	B	12.8/7.6
C524	4550006250	S.TAN	TEESVA 1A 106M8R	B	7.2/7.6
C525	4030017330	S.CER	ECJ0EF1C104Z	B	85.7/7.7
C526	4030016790	S.CER	ECJ0EB1C103K	B	84.1/7.7
C527	4030017420	S.CER	ECJ0EC1H470J	T	5.9/17.2
C528	4030017460	S.CER	ECJ0EB1E102K	T	8.4/17.2
C529	4550006250	S.TAN	TEESVA 1A 106M8R	B	82.1/9.8
C530	4030016930	S.CER	ECJ0EB1A104K	B	84.1/12.1
C531	4030017460	S.CER	ECJ0EB1E102K	B	79/22.5
C533	4030017460	S.CER	ECJ0EB1E102K	B	80/22.5
C534	4030017420	S.CER	ECJ0EC1H470J	B	76.2/22.9
C535	4030016930	S.CER	ECJ0EB1A104K	B	5.4/9.1
C536	4030016930	S.CER	ECJ0EB1A104K	B	3.3/18.2
C537	4030017460	S.CER	ECJ0EB1E102K	B	14/25
C538	4030017330	S.CER	ECJ0EF1C104Z	B	6/10.9
C539	4030017420	S.CER	ECJ0EC1H470J	T	10.9/17.2
C540	4030017460	S.CER	ECJ0EB1E102K	B	10.9/17.8
C541	4030017420	S.CER	ECJ0EC1H470J	B	8.5/10.9
C543	4030017420	S.CER	ECJ0EC1H470J	B	77.6/16.7
C544	4030017420	S.CER	ECJ0EC1H470J	B	79.8/16.7
C545	4030017420	S.CER	ECJ0EC1H470J	B	77.6/15.8
C546	4030017420	S.CER	ECJ0EC1H470J	B	74/15.3
C547	4030017460	S.CER	ECJ0EB1E102K	B	74/16.2
C548	4030017490	S.CER	C1608 JB 1A 105K-T	B	9.7/19.3
C549	4030016930	S.CER	ECJ0EB1A104K	B	3.7/21.2
C550	4030018900	S.CER	ECJ0EB0J474K	B	70.1/11.9
C551	4030016930	S.CER	ECJ0EB1A104K	B	70.9/10.2
C552	4030017460	S.CER	ECJ0EB1E102K	B	75.2/6.9
C553	4030017460	S.CER	ECJ0EB1E102K	B	71.4/13.3
C554	4030016790	S.CER	ECJ0EB1C103K	B	74.2/8.7
C555	4030017460	S.CER	ECJ0EB1E102K [USA-01]	B	74/14.4
	4030017460	S.CER	ECJ0EB1E102K [EXP-01]		
	4030017460	S.CER	ECJ0EB1E102K [EUR-01]		
	4030018920	S.CER	ECJ0EB1H392K [USA-02]		
	4030018920	S.CER	ECJ0EB1H392K [EXP-02]		
	4030018920	S.CER	ECJ0EB1H392K [EUR-02]		
	4030018920	S.CER	ECJ0EB1H392K [USA-01]		
	4030018920	S.CER	ECJ0EB1H392K [EUR-03]		
	4030018920	S.CER	ECJ0EB1H392K [CHN-01]		
	4030018920	S.CER	ECJ0EB1H392K [USA-11]		
	4030018920	S.CER	ECJ0EB1H392K [USA-12]		
C556	4550006480	S.TAN	TEESVA 1C 475M8R	B	76.9/10.2
J501	6510022022	S.CON	14FLT-SM2-TB(LF)(SN)(M)	B	88/28.5
J502	6510023092	S.CON	20FLT-SM2-TB(LF)(SN)(M)	B	75.5/19.5
J503	6450002210	CON	3017-8821 <KIN>		
DS501	5030003020	LCD	L6-0226TVM-3		
DS502	5040002670	S.LED	CL-165HR/YG	T	18.2/35.9
DS503	5040002310	S.LED	SML-311YTT86	T	32.8/6.5
DS504	5040002310	S.LED	SML-311YTT86	T	46.1/6.3
DS505	5040002310	S.LED	SML-311YTT86	T	59.8/6.3
DS506	5040002310	S.LED	SML-311YTT86	T	92.3/24.5

M.=Mounted side (T: Mounted on the Top side, B: Mounted on the Bottom side)
S.=Surface mount

[FRONT UNIT]

REF NO.	PARTS NO.	DESCRIPTION		M.	H/V LOCATION
DS507	5040002310	S.LED	SML-311YTT86	T	73.1/6.5
DS508	5040002310	S.LED	SML-311YTT86	T	31.7/26
DS509	5040002310	S.LED	SML-311YTT86	T	40.2/26
DS510	5040002310	S.LED	SML-311YTT86	T	48.7/26
DS511	5040002310	S.LED	SML-311YTT86	T	74.2/26
DS512	5040002310	S.LED	SML-311YTT86	T	65.7/26
DS513	5040002310	S.LED	SML-311YTT86	T	57.2/26
SP501	2510001400	SPE	3050S-E6227 <PRI>		
W501	8900012711	CAB	OPC-1297A (P0.5,N20,L62) <TJM>		
W502	7030012290	JUM	RDS2T0R0		
W503	7030012290	JUM	RDS2T0R0		
EP502	8930072220	LCD	SRCN-2979-SP-N-W (SHJ)		

[CONNECT UNIT]

REF NO.	PARTS NO.	DESCRIPTION		M.	H/V LOCATION
C601	4030017420	S.CER	ECJ0EC1H470J	T	12.7/4.6
C602	4030017420	S.CER	ECJ0EC1H470J	T	15.4/4.6
C603	4030017420	S.CER	ECJ0EC1H470J	T	18.2/4.6
C604	4030017420	S.CER	ECJ0EC1H470J	T	19.6/4.6
C605	4030017420	S.CER	ECJ0EC1H470J	T	20.9/4.6
C606	4030017420	S.CER	ECJ0EC1H470J	T	25.1/4.6
C607	4030017420	S.CER	ECJ0EC1H470J	T	37.5/13.2
C608	4030017420	S.CER	ECJ0EC1H470J	T	16.8/4.6
C609	4030017420	S.CER	ECJ0EC1H470J	T	40.3/13.2
C610	4030017420	S.CER	ECJ0EC1H470J	T	41.7/4.6
J601	6510025240	S.CON	IMSA-9631S-20Y912	B	32.2/16.2
J602	6510023210	CON	CD6125SA1J0 <CVI>		
W601	8900012711	CAB	OPC-1297A (P0.5,N20,L62) <TJM>		

M.=Mounted side (T: Mounted on the Top side, B: Mounted on the Bottom side)
S.=Surface mount

[MAIN-A UNIT] (MDC compatible)

REF NO.	PARTS NO.	DESCRIPTION	M.	H/V LOCATION
IC1	1110005340	S.IC NJM12902V-TE1-#ZZZB	T	82.3/12.9
IC2	1110006221	S.IC AK2346P-E2/P	B	44.7/11.7
IC3	1140013200	S.IC CD4053BPWR	B	58.7/9.3
IC4	1130010100	S.IC LMX2352TMX/NOPB	T	82.9/46
IC5	1110003491	S.IC TA31136FNG(D,EL)	T	28/13.9
IC6	1190001350	S.IC M62364FP 600D	B	84.9/12.9
IC7	1110005340	S.IC NJM12902V-TE1-#ZZZB	T	108.5/43.7
IC8	1140013200	S.IC CD4053BPWR	B	58.7/16.1
IC9	1130012960	S.IC BU8872FS-E2	B	133.1/21.3
IC10	1190002051	S.IC SPM5001-TL-E	B	33.8/36.9
IC12	1190001340	S.IC M62334FP 600C	B	9.1/25.7
IC13	1110005771	S.IC S-80942CNMC-G9CT2G	B	126/44.8
IC14	1140014550	S.IC HD64F2506RFC26DV(EMPTY)	B	111.8/35.7
IC15	1150002073	IC RA60H1317M-125 [USA-02]		
	1150002042	IC RA30H1317M-121 [EXP-02]		
	1150002042	IC RA30H1317M-121 [EUR-02]		
	1150002073	IC RA60H1317M-125 [USA-01]		
	1150002042	IC RA30H1317M-121 [EUR-03]		
	1150002073	IC RA60H1317M-125 [CHN-01]		
	1150002073	IC RA60H1317M-125 [USA-11]		
	1150002073	IC RA60H1317M-125 [USA-12]		
IC16	1140014160	S.IC 24LC1025T-I/SM <SEI>	B	133.3/29
IC17	1110002751	S.IC TA75S01F(TE85R,F)	T	54.1/70.4
IC18	1180000970	S.IC AN78L05M-(E1)	B	113/65.3
IC19	1120002510	S.IC DS14C232TM S	T	104.7/70.5
IC20	1180001252	S.IC TA7808F(TE16L1,NQ)	B	121.5/65.8
IC21	1110003091	IC LA4425A-E		
IC22	1110002751	S.IC TA75S01F(TE85R,F)	B	135.5/54.4
IC23	1130006221	S.IC TC4W53FU(TE12L,F)	B	106.9/9.6
IC25	1110006230	S.IC NJM2711F-TE1-#ZZZB	B	26.1/6.6
Q1	1590003231	S.TRA UNR9113G0L	B	15.2/6
Q3	1530002851	S.TRA 2SC4116-BL(TE85R,F)	B	36.4/15.5
Q4	1590001650	S.TRA XP4601(TX)	B	92.8/12.4
Q5	1590003291	S.TRA UNR9213G0L	B	76.7/50
Q6	1530002851	S.TRA 2SC4116-BL(TE85R,F)	T	63.2/55.1
Q7	1560000541	S.FET 2SK880-Y(T5RICOM,F)	B	81.2/27.1
Q8	1530002851	S.TRA 2SC4116-BL(TE85R,F)	B	79.2/31.8
Q9	1530002851	S.TRA 2SC4116-BL(TE85R,F)	B	81.7/31.8
Q10	1560001360	S.FET 2SK3019 TL	B	57/31.6
Q12	1530002601	S.TRA 2SC4215-O(TE85R,F)	T	26.9/20
Q16	1590003291	S.TRA UNR9213G0L	T	113.2/47.6
Q17	1530002920	S.TRA 2SC4226-T1 R25	T	50.9/47.6
Q18	1530002920	S.TRA 2SC4226-T1 R25	T	61.6/42.6
Q19	1530002920	S.TRA 2SC4226-T1 R25	T	72.1/43
Q20	1590003231	S.TRA UNR9113G0L	B	33.9/25.2
Q22	1530003311	S.TRA 2SC5107-O(TE85R,F)	T	58.1/46.3
Q23	1590001400	S.TRA XP1214(TX)	B	55.7/40.9
Q24	1590003281	S.TRA UNR9211G0L	B	55.8/38.2
Q25	1530003311	S.TRA 2SC5107-O(TE85R,F)	B	65.9/49.5
Q26	1590001400	S.TRA XP1214(TX)	B	67.2/43.1
Q27	1590003231	S.TRA UNR9113G0L	T	124.7/52
Q28	1590003291	S.TRA UNR9213G0L	B	123.4/46.3
Q29	1530003311	S.TRA 2SC5107-O(TE85R,F)	B	53.5/51.2
Q30	1530000372	S.TRA 2SC3356-T1B R (R24)	B	65.5/66
Q31	1580000731	S.FET 3SK293(TE85L,F)	B	10.2/38.6
Q32	1560000841	S.FET 2SK1829(TE85R,F)	T	11/42.5
Q33	1530002851	S.TRA 2SC4116-BL(TE85R,F) [USA-02]	T	47.5/69.4
	1530002851	S.TRA 2SC4116-BL(TE85R,F) [USA-01]		
	1530002851	S.TRA 2SC4116-BL(TE85R,F) [CHN-01]		
	1530002851	S.TRA 2SC4116-BL(TE85R,F) [USA-11]		
	1530002851	S.TRA 2SC4116-BL(TE85R,F) [USA-12]		
Q34	1590003291	S.TRA UNR9213G0L	T	83/67.4
Q35	1520000460	S.TRA 2SB1132 T100 R	T	100.1/57.9
Q36	1590001190	S.TRA XP6501-(TX).AB	T	104.3/55.8
Q37	1540000550	S.TRA 2SD1664 T100Q	T	75.5/63.6
Q38	1510000920	S.TRA 2SA1577 T106 Q	T	39.3/21.3
Q39	1590003291	S.TRA UNR9213G0L	T	42.6/21.3
Q40	1590003291	S.TRA UNR9213G0L	T	104.1/51.9
Q41	1590001451	S.FET 2SJ144-GR (TE85R,F)	B	110.3/83.3
Q42	1590003291	S.TRA UNR9213G0L	B	132.1/45
Q43	1590000990	S.TRA DTC363EK T146	B	135.7/49
Q44	1590003291	S.TRA UNR9213G0L	T	108.5/21.6
Q45	1590003291	S.TRA UNR9213G0L	B	133.3/58.9
Q46	1590003291	S.TRA UNR9213G0L	T	117.9/84.4
Q47	1550000100	S.FET 2SJ377 (TE16L1,NQ)	B	131.3/71.5
Q48	1590003291	S.TRA UNR9213G0L	B	127.4/78
Q49	1530002851	S.TRA 2SC4116-BL(TE85R,F)	B	139.3/37.2
Q50	1530002601	S.TRA 2SC4215-O(TE85R,F)	T	40.6/39.2
Q51	1590003560	S.FET TPC6104 (TE85L,F)	B	133.6/63.4
Q52	1590003291	S.TRA UNR9213G0L	B	128.2/61.1
Q53	1590000430	S.TRA DTC144EUA T106	B	52.3/67.4
Q54	1590000430	S.TRA DTC144EUA T106	T	25.5/6.3
Q55	1560001360	S.FET 2SK3019 TL	T	75.5/20.9
Q57	1590003291	S.TRA UNR9213G0L	T	112/14.4
Q58	1530002851	S.TRA 2SC4116-BL(TE85R,F)	B	24.9/9.5
Q59	1590003291	S.TRA UNR9213G0L	B	96.6/8
Q60	1590003291	S.TRA UNR9213G0L	B	97.8/11.6
D1	1750001070	S.DIO DAN235ETL	T	10.4/15.7
D2	1750001070	S.DIO DAN235ETL	T	22.6/8.9
D3	1790001251	S.DIO MA2S1110GL	T	61.3/55
D4	1790001261	S.DIO MA2S077G0L	B	72.9/49.8
D5	1790001261	S.DIO MA2S077G0L	B	71.1/51.3
D6	1750001070	S.DIO DAN235ETL	T	30.6/20.8
D7	1160000140	S.DIO DAP222 TL	T	58.9/14
D8	1720000791	S.VAR HVC321B1TRF-E	T	49.5/32.4
D9	1720000791	S.VAR HVC321B1TRF-E	T	52.7/32.4
D10	1720000791	S.VAR HVC321B1TRF-E	T	60.5/30
D11	1720000641	S.VAR 1SV284(TPH3,F)	T	52.7/33.6
D12	1720000641	S.VAR 1SV284(TPH3,F)	T	52.7/34.8
D13	1720000791	S.VAR HVC321B1TRF-E	T	63.8/28.6
D14	1720000791	S.VAR HVC321B1TRF-E	T	73.6/30.4

[MAIN-A UNIT] (MDC compatible)

REF NO.	PARTS NO.	DESCRIPTION	M.	H/V LOCATION
D15	1720000641	S.VAR 1SV284(TPH3,F)	T	63.8/31.3
D17	1720000791	S.VAR HVC321B1TRF-E	T	72.1/27.9
D18	1750000721	S.VAR HVC375BTRF-E	T	69.8/33.3
D19	1160000140	S.DIO DAP222 TL	B	120.5/17.8
D20	1720000471	S.VAR 1SV239(TPH3,F)	T	69.4/34.9
D21	1750001070	S.DIO DAN235ETL	T	36.3/38.3
D22	1750000520	S.DIO DAN222TL	T	124.7/54.5
D23	1790001261	S.DIO MA2S077G0L	T	125.6/39.2
D24	1790001261	S.DIO MA2S077G0L	B	50.7/53.2
D25	1790001261	S.DIO MA2S077G0L	B	49.3/50.8
D26	1750000711	S.VAR HVC350BTRF-E	B	17.7/36
D27	1750000711	S.VAR HVC350BTRF-E	B	16.2/36
D30	1750000721	S.VAR HVC375BTRF-E	B	8.6/44.7
D31	1790001251	S.DIO MA2S1110GL	T	8.5/43.7
D32	1750001080	S.DIO RB886G T2R	T	64.1/76.5
D33	1750001080	S.DIO RB886G T2R	T	65.8/75.8
D34	1750000721	S.VAR HVC375BTRF-E	B	8.6/47.4
D35	1790001621	S.DIO 1SV308(TPL3,F)	B	17.9/48.1
D37	1750000370	S.DIO DA221 TL	T	75.5/67.6
D38	1750000511	S.DIO UX9401F-STD/TR <INT>[EXP-02]	T	30/66
	1750000511	S.DIO UX9401F-STD/TR <INT>[EUR-02]		
	1750000511	S.DIO UX9401F-STD/TR <INT>[EUR-03]		
D39	1710001061	DIO L407CDB [USA-02]		
	1710001061	DIO L407CDB [USA-01]		
	1710001061	DIO L407CDB [CHN-01]		
	1710001061	DIO L407CDB [USA-11]		
	1710001061	DIO L407CDB [USA-12]		
D42	1750001360	S.DIO L709CER (9401)	T	34.6/58.7
D45	1750000520	S.DIO DAN222TL	T	91.8/57.5
D46	1750000520	S.DIO DAN222TL	T	89.6/57.5
D47	1790001211	S.DIO 1SS375-TL-E	B	29.2/63.8
D48	1750000520	S.DIO DAN222TL	B	93/61.5
D49	1790001211	S.DIO 1SS375-TL-E	B	6/52.8
D50	1750000370	S.DIO DA221 TL	B	97.2/65.8
D51	1790001211	S.DIO 1SS375-TL-E	B	3.9/79.7
D52	1750000520	S.DIO DAN222TL	B	132.5/41
D53	1790001251	S.DIO MA2S1110GL	B	133.3/47.3
D55	1750000370	S.DIO DA221 TL	B	108.8/57.4
D56	1750000370	S.DIO DA221 TL	T	108.8/60.6
D57	1750000370	S.DIO DA221 TL	B	95.1/65.8
D58	1750000520	S.DIO DAN222TL	T	94/57.5
D59	1750000520	S.DIO DAN222TL	B	104/80.4
D62	1790000700	DIO DSA3A1		
D63	1750000520	S.DIO DAN222TL	B	110.3/80.9
D65	1750000520	S.DIO DAN222TL	B	129.7/58.9
D66	1790001621	S.DIO 1SV308(TPL3,F)	T	33.9/38.8
D67	1790001621	S.DIO 1SV308(TPL3,F)	T	33.9/37.5
D68	1790001621	S.DIO 1SV308(TPL3,F)	T	29.9/23.2
D69	1790001621	S.DIO 1SV308(TPL3,F)	T	31.2/23.2
D70	1750000351	S.DIO 1SV252(TE85L,F)	T	73.6/75.5
D71	1730002411	S.ZEN MAZ8200GHL	T	118.3/86.3
D72	1750000520	S.DIO DAN222TL	T	87.4/57.5
D73	1750000520	S.DIO DAN222TL	B	93/64.5
FI1	2020001410	CER CFWLB450KGFA-B0 (CFWM450G)		
FI2	2020002470	S.CER CFWKA450KHFA001-R0	T	15.4/9.3
FI3	2030000500	S.MON DSF753SBF 46.35 MHz (FL-401)	T	24.7/28.4
FI4	2030000670	S.MON DSF753SBF 46.35 MHz (FL-420)	T	35.6/28.4
FI5	2040001440	S.LC NFE31PT152Z1E9L (NFM60R20T152)	B	94.5/77
FI6	2040001440	S.LC NFE31PT152Z1E9L (NFM60R20T152)	B	94.5/73.7
FI7	2040001440	S.LC NFE31PT152Z1E9L (NFM60R20T152) [USA-02]	B	94.5/70.3
	2040001440	S.LC NFE31PT152Z1E9L (NFM60R20T152) [USA-01]		
	2040001440	S.LC NFE31PT152Z1E9L (NFM60R20T152) [CHN-01]		
	2040001440	S.LC NFE31PT152Z1E9L (NFM60R20T152) [USA-11]		
	2040001440	S.LC NFE31PT152Z1E9L (NFM60R20T152) [USA-12]		
X1	6050012380	S.XTA CR-826 DSA535SD 15.3 MHz	T	84.2/34.7
X2	6050011730	S.XTA CR-765 SMD-49TA 3.6864 MHz <KDS>	T	48.3/11.6
X3	6070000300	S.DIS JTBM450CX24 <JJE>	T	37.1/10.3
X4	6050012320	S.XTA CR-818 SMD-49 4.194304 MHz <KDS>	T	139.1/21.9
X5	6050011720	S.XTA CR-764 SMD-49TB 19.6608 MHz <KDS>	T	120.5/44.3
L1	6200004660	S.COI MLF1608A 1R8K-T	T	82.7/54.3
L2	6200003540	S.COI MLF1608D R22K-T	B	34.4/14.7
L3	6200004480	S.COI MLF1608D R82K-T	B	29.7/16.2
L4	6200007911	S.COI ELJRF 18NJFB	B	75.9/48.3
L5	6200007120	S.COI ELJND 1R0J	T	49.4/30.8
L6	6200007120	S.COI ELJND 1R0J	T	52.7/30.8
L7	6200007120	S.COI ELJND 1R0J	T	60.5/28.4
L8	6200007170	S.COI MLF1608A 3R3K-T	T	74/27.5
L9	6200007170	S.COI MLF1608A 3R3K-T	T	69.8/32
L10	6200010600	S.COI C6342A-67NG-A	T	51.2/39.2
L11	6200003640	S.COI MLF1608E 100K-T	T	48.3/33.6
L12	6200009910	S.COI C6342A-88NG-A	T	61.6/35.5
L13	6200007120	S.COI ELJND 1R0J	T	63.8/27
L14	6200003640	S.COI MLF1608E 100K-T	T	60/31.4
L15	6200012450	S.COI 0.25-1.9-8TL 73N (COAT) <COMO>	T	73.3/35.9
L16	6200008090	S.COI LQW2BHN68NJ03L	T	69.5/28
L17	6200003640	S.COI MLF1608E 100K-T	T	73.7/32.6
L18	6130003000	S.COI #617DB-1714=P3	B	39/36.2

M.=Mounted side (T: Mounted on the Top side, B: Mounted on the Bottom side)
S.=Surface mount

[MAIN-A UNIT] (MDC compatible)

REF NO.	PARTS NO.	DESCRIPTION	M.	H/V LOCATION
L19	6130003000	S.COI #617DB-1714=P3	B	34.5/42.6
L20	6200009181	S.COI ELJRE R10JFA	T	57.3/48.3
L21	6200007911	S.COI ELJRF 18NJFB	B	66.3/51.2
L22	6200005721	S.COI ELJRE 33NGFA	B	40.6/48.1
L23	6200005721	S.COI ELJRE 33NGFA	B	45.5/48.1
L24	6130003000	S.COI #617DB-1714=P3	B	27/36.2
L25	6200009151	S.COI ELJRE 82NJFA	B	54.2/53.4
L26	6200010720	S.COI C2520C-56NG-A	B	20.9/37
L27	6200009181	S.COI ELJRE R10JFA	B	66.5/69.4
L28	6200010720	S.COI C2520C-56NG-A	B	11.7/35.1
L29	6200009171	S.COI ELJRE 47NJFA	B	70.5/70.8
L30	6200009171	S.COI ELJRE 47NJFA	T	72.6/72.7
L31	6200011410	S.COI C2520C-82NG-A	B	7.8/41.5
L32	6200011410	S.COI C2520C-82NG-A	B	9.9/50.6
L33	6200010050	S.COI AS080547-47N	T	33.3/73.9
L34	6200007750	S.COI LQW2BHN56NJ03L	B	13.2/51.7
L35	6200006991	S.COI ELJRE 56NGFA	B	20.1/50.7
L36	6200010420	S.COI FHW1210HC 1R0JGT <JJE>	B	39.2/66
L37	6200010050	S.COI AS080547-47N	T	30/58.5
L38	6200010050	S.COI AS080547-47N	T	21.6/58
L39	6200010050	S.COI AS080547-47N	T	12.5/57.5
L40	6200010050	S.COI AS080547-47N	T	10.5/81
L41	6200002861	S.COI NLV25T-4R7J	T	122.3/54.4
L42	6200005011	S.COI NLV25T-100J	T	40.7/42.1
L43	6200010680	S.COI C2520C-R22G-A (0.22U)	T	42.1/34.9
L44	6200010740	S.COI C2520C-R27G-A	T	37.8/35.3
L45	6200003960	S.COI MLF1608A 1R0K-T	T	71.3/72.7
L46	6200005661	S.COI ELJRE 10NGFA	T	78.3/42.3
L47	6200004480	S.COI MLF1608D R82K-T	T	23.3/20.9
L48	6200007750	S.COI LQW2BHN56NJ03L	B	23.9/39.8
L49	6200009571	S.COI ELJRE R12GFA [USA-02]	B	6.6/36.3
	6200009571	S.COI ELJRE R12GFA [USA-01]		
	6200009571	S.COI ELJRE R12GFA [CHN-01]		
	6200009571	S.COI ELJRE R12GFA [USA-11]		
	6200009571	S.COI ELJRE R12GFA [USA-12]		
R1	7030005060	S.RES ERJ2GEJ 333 X (33K)	B	38.1/5.8
R2	7510001730	S.THE ERTJOEP 473J	T	88.9/34.2
R3	7030005050	S.RES ERJ2GEJ 103 X (10K)	T	79/11.9
R4	7030005700	S.RES ERJ2GEJ 274 X (270K)	B	88.5/18.9
R5	7030005090	S.RES ERJ2GEJ 104 X (100K)	T	88.9/32.3
R6	7030005160	S.RES ERJ2GEJ 105 X (1M)	T	84/19.4
R7	7030005230	S.RES ERJ2GEJ 334 X (330K)	T	84/17.5
R8	7410001130	S.ARR EXB28V102JX	T	86.1/52.4
R9	7030007570	S.RES ERJ2GEJ 122 X (1.2K)	B	34.3/11.6
R10	7030007060	S.RES ERJ2GEJ 684X (680K)	B	35.8/13.7
R11	7030010040	S.RES ERJ2GEJ-JPW	T	8.4/9.2
R12	7030004970	S.RES ERJ2GEJ 470 X (47)	T	31/17.2
R13	7030005600	S.RES ERJ2GEJ 273 X (27K)	T	8.8/15.9
R14	7030005210	S.RES ERJ2GEJ 822 X (8.2K)	T	7.5/7.4
R15	7030005070	S.RES ERJ2GEJ 683 X (68K)	B	93.3/14.4
R17	7030007570	S.RES ERJ2GEJ 122 X (1.2K)	B	93.3/15.3
R18	7030008300	S.RES ERJ2GEJ 184 X (180K)	B	79/11.8
R19	7030005230	S.RES ERJ2GEJ 334 X (330K)	T	89.3/9
R20	7030005090	S.RES ERJ2GEJ 104 X (100K)	T	85.6/8.3
R21	7030005070	S.RES ERJ2GEJ 683 X (68K)	T	86.6/8.3
R22	7030005050	S.RES ERJ2GEJ 103 X (10K)	B	38.1/7.5
R23	7030005050	S.RES ERJ2GEJ 103 X (10K)	B	38.1/9.2
R24	7030005060	S.RES ERJ2GEJ 333 X (33K)	B	37.2/10.5
R25	7030005120	S.RES ERJ2GEJ 102 X (1K)	B	100.9/51.4
R26	7030004980	S.RES ERJ2GEJ 101 X (100)	B	87.5/5.3
R27	7030007300	S.RES ERJ2GEJ 332 X (3.3K)	T	53.9/5.6
R28	7030010040	S.RES ERJ2GEJ-JPW	T	59.4/5.6
R29	7030005530	S.RES ERJ2GEJ 100 X (10)	T	116.4/14.5
R30	7030005170	S.RES ERJ2GEJ 474 X (470K)	B	37.2/9.2
R31	7030008410	S.RES ERJ2GEJ 392 X (3.9K)	B	36.3/9.2
R32	7030007340	S.RES ERJ2GEJ 153 X (15K)	B	37.2/7.5
R33	7030005160	S.RES ERJ2GEJ 105 X (1M)	T	80.7/8.4
R34	7030005040	S.RES ERJ2GEJ 472 X (4.7K)	T	80.7/7.2
R35	7030005120	S.RES ERJ2GEJ 102 X (1K)	T	77.6/9.5
R36	7030005030	S.RES ERJ2GEJ 152 X (1.5K)	B	27/14.7
R37	7030007300	S.RES ERJ2GEJ 332 X (3.3K)	B	15.2/8.6
R38	7030005210	S.RES ERJ2GEJ 822 X (8.2K)	T	22.9/6.2
R39	7030005600	S.RES ERJ2GEJ 273 X (27K)	T	24/9.1
R40	7030005170	S.RES ERJ2GEJ 474 X (470K)	T	25.9/10.6
R42	7030005090	S.RES ERJ2GEJ 104 X (100K)	B	94.8/11.7
R43	7030007300	S.RES ERJ2GEJ 332 X (3.3K)	B	94.8/10
R44	7030007340	S.RES ERJ2GEJ 153 X (15K)	B	90.7/11.9
R45	7030005220	S.RES ERJ2GEJ 223 X (22K)	B	92.8/10
R46	7030005040	S.RES ERJ2GEJ 472 X (4.7K)	T	92.1/14.1
R47	7030005050	S.RES ERJ2GEJ 103 X (10K)	T	92.1/13.1
R48	7030005060	S.RES ERJ2GEJ 333 X (33K)	B	50.9/8.6
R49	7030005160	S.RES ERJ2GEJ 105 X (1M)	B	49.7/13.7
R50	7030005090	S.RES ERJ2GEJ 104 X (100K)	B	49.7/11
R51	7030005290	S.RES ERJ2GEJ 682 X (6.8K)	T	52.4/7
R52	7030007340	S.RES ERJ2GEJ 153 X (15K)	T	59.1/12.5
R53	7030005000	S.RES ERJ2GEJ 471 X (470)	T	86.2/37.7
R54	7030010040	S.RES ERJ2GEJ-JPW	B	78.7/36.4
R55	7030005290	S.RES ERJ2GEJ 682 X (6.8K)	T	81.8/25.3
R56	7030005040	S.RES ERJ2GEJ 472 X (4.7K)	B	77.7/48.4
R57	7030005090	S.RES ERJ2GEJ 104 X (100K)	B	28.3/14.3
R58	7030005050	S.RES ERJ2GEJ 103 X (10K)	T	27.6/9
R59	7030005170	S.RES ERJ2GEJ 474 X (470K)	T	27.6/8.1
R60	7030005000	S.RES ERJ2GEJ 471 X (470)	T	30.9/10.2
R61	7030005040	S.RES ERJ2GEJ 472 X (4.7K)	T	28.8/8.5
R63	7030005220	S.RES ERJ2GEJ 223 X (22K)	B	92.8/8.3
R64	7030005220	S.RES ERJ2GEJ 223 X (22K)	B	92.8/6.5
R65	7030005090	S.RES ERJ2GEJ 104 X (100K)	B	50.9/9.5
R66	7030005050	S.RES ERJ2GEJ 103 X (10K)	T	86.6/11.8
R67	7030005290	S.RES ERJ2GEJ 682 X (6.8K)	T	53.4/7
R68	7030007290	S.RES ERJ2GEJ 222 X (2.2K)	B	53.7/17.9
R69	7030010040	S.RES ERJ2GEJ-JPW	T	85.6/13.6
R71	7030005090	S.RES ERJ2GEJ 104 X (100K)	T	57.7/6.3
R72	7030007290	S.RES ERJ2GEJ 222 X (2.2K)	T	64.9/55.6

[MAIN-A UNIT] (MDC compatible)

REF NO.	PARTS NO.	DESCRIPTION	M.	H/V LOCATION
R73	7030005000	S.RES ERJ2GEJ 471 X (470)	B	83.2/26.9
R74	7030007300	S.RES ERJ2GEJ 332 X (3.3K)	B	81.8/25.3
R75	7030009140	S.RES ERJ2GEJ 272 X (2.7K)	B	79.2/34
R76	7030007340	S.RES ERJ2GEJ 153 X (15K)	B	80.3/29.1
R77	7030005580	S.RES ERJ2GEJ 560 X (56)	T	78.2/47.2
R78	7030005070	S.RES ERJ2GEJ 683 X (68K)	B	81.5/34
R79	7030005040	S.RES ERJ2GEJ 472 X (4.7K)	B	74.8/50
R80	7030005040	S.RES ERJ2GEJ 472 X (4.7K)	B	70/50.9
R81	7030005110	S.RES ERJ2GEJ 224 X (220K)	B	55.5/31.4
R82	7030005110	S.RES ERJ2GEJ 224 X (220K)	B	66.3/33.3
R83	7030008400	S.RES ERJ2GEJ 182 X (1.8K)	T	32.6/10.2
R85	7030005110	S.RES ERJ2GEJ 224 X (220K)	T	25.1/20.7
R87	7030007300	S.RES ERJ2GEJ 332 X (3.3K)	T	32.2/20.6
R88	7030005120	S.RES ERJ2GEJ 102 X (1K)	B	91.7/6.5
R90	7030005000	S.RES ERJ2GEJ 471 X (470)	B	89.4/18.9
R91	7030005700	S.RES ERJ2GEJ 274 X (270K)	T	85.6/11.8
R92	7030005090	S.RES ERJ2GEJ 104 X (100K)	T	87.3/13.4
R93	7030005310	S.RES ERJ2GEJ 124 X (120K)	T	83.9/8.2
R94	7030005080	S.RES ERJ2GEJ 823 X (82K)	T	108/34.7
R95	7030005720	S.RES ERJ2GEJ 563 X (56K)	T	108/33.8
R96	7030005240	S.RES ERJ2GEJ 473 X (47K)	B	63.7/15.5
R97	7030005060	S.RES ERJ2GEJ 333 X (33K)	B	53.3/16.6
R98	7030005030	S.RES ERJ2GEJ 152 X (1.5K)	B	62.1/19.4
R99	7030005240	S.RES ERJ2GEJ 473 X (47K)	B	60.2/19.4
R100	7030005030	S.RES ERJ2GEJ 152 X (1.5K)	B	77.9/34.4
R101	7030008280	S.RES ERJ2GEJ 271 X (270)	B	79.2/29.1
R102	7030005530	S.RES ERJ2GEJ 100 X (10)	T	23/22.9
R103	7030005600	S.RES ERJ2GEJ 273 X (27K)	B	29.9/23.8
R104	7030007280	S.RES ERJ2GEJ 331 X (330)	T	26.9/22.6
R105	7030005600	S.RES ERJ2GEJ 273 X (27K)	B	30.9/23.8
R106	7030007270	S.RES ERJ2GEJ 151 X (150)	T	34.3/22.5
R107	7030007340	S.RES ERJ2GEJ 153 X (15K)	B	129.7/52.3
R108	7030005240	S.RES ERJ2GEJ 473 X (47K)	B	82.3/18.9
R109	7030005700	S.RES ERJ2GEJ 274 X (270K)	B	81.3/18.9
R110	7030005050	S.RES ERJ2GEJ 103 X (10K)	T	78.4/20.2
R111	7030005050	S.RES ERJ2GEJ 103 X (10K)	T	95.9/28.3
R112	7030005700	S.RES ERJ2GEJ 274 X (270K)	T	80.8/20.1
R113	7030005240	S.RES ERJ2GEJ 473 X (47K)	B	57.9/19.4
R114	7030005090	S.RES ERJ2GEJ 104 X (100K)	B	53.7/13.3
R115	7030005090	S.RES ERJ2GEJ 104 X (100K)	T	114.4/18.4
R116	7030005090	S.RES ERJ2GEJ 104 X (100K)	B	85.3/7.3
R118	7030006610	S.RES ERJ2GEJ 394 X (390K)	T	89.5/11.7
R120	7030009280	S.RES ERJ2GEJ 391 X	T	30.3/34.3
R122	7030005600	S.RES ERJ2GEJ 273 X (27K)	T	32.3/35.2
R123	7030005600	S.RES ERJ2GEJ 273 X (27K)	T	33.5/35.2
R125	7030007270	S.RES ERJ2GEJ 151 X (150)	T	35/34
R127	7030005050	S.RES ERJ2GEJ 103 X (10K)	B	79.1/18.3
R128	7030008290	S.RES ERJ2GEJ 183 X (18K)	T	112.1/45.1
R129	7030005040	S.RES ERJ2GEJ 472 X (4.7K)	T	112.1/44.1
R130	7030005070	S.RES ERJ2GEJ 683 X (68K)	T	104.9/43.2
R131	7030005070	S.RES ERJ2GEJ 683 X (68K)	T	104.9/44.1
R132	7030004980	S.RES ERJ2GEJ 101 X (100)	T	114.4/17.5
R134	7030005160	S.RES ERJ2GEJ 105 X (1M)	T	128.9/26.3
R135	7030005160	S.RES ERJ2GEJ 105 X (1M)	T	128.9/25.3
R136	7030005160	S.RES ERJ2GEJ 105 X (1M)	T	128.9/24.2
R139	7410001140	S.ARR EXB28V104JX	T	130.6/20.6
R140	7030011000	S.RES RR0510P-392-D (3.9K)	T	48.1/47.2
R141	7030008340	S.RES RR0510P-182-D (1.8K)	T	50.8/45.4
R142	7030010040	S.RES ERJ2GEJ-JPW	T	49/47.2
R143	7030011000	S.RES RR0510P-392-D (3.9K)	T	58.7/42.2
R144	7030008340	S.RES RR0510P-182-D (1.8K)	T	61.7/40.4
R145	7030010040	S.RES ERJ2GEJ-JPW	T	59.6/42.2
R146	7030011000	S.RES RR0510P-392-D (3.9K)	T	71.8/45.8
R147	7030008340	S.RES RR0510P-182-D (1.8K)	T	70/41.9
R148	7030010040	S.RES ERJ2GEJ-JPW	T	71.8/44.9
R149	7030005310	S.RES ERJ2GEJ 124 X (120K)	T	69.1/36.3
R150	7030005240	S.RES ERJ2GEJ 473 X (47K)	T	89.8/15.5
R151	7030005060	S.RES ERJ2GEJ 333 X (33K)	T	91/16.1
R152	7030005090	S.RES ERJ2GEJ 104 X (100K)	T	88.9/16.4
R153	7030007300	S.RES ERJ2GEJ 332 X (3.3K)	T	39.9/32.2
R154	7030004970	S.RES ERJ2GEJ 470 X (47)	T	42.9/40.1
R155	7030005120	S.RES ERJ2GEJ 102 X (1K)	T	41.7/32.4
R156	7030004970	S.RES ERJ2GEJ 470 X (47)	T	42.5/41.3
R157	7030005090	S.RES ERJ2GEJ 104 X (100K)	B	33.7/23.6
R158	7030005240	S.RES ERJ2GEJ 473 X (47K)	T	112.1/42.3
R159	7030005240	S.RES ERJ2GEJ 473 X (47K)	T	112.1/40.5
R160	7030005240	S.RES ERJ2GEJ 473 X (47K)	T	113.8/38.7
R161	7030005070	S.RES ERJ2GEJ 683 X (68K)	T	104.9/46.8
R162	7030005240	S.RES ERJ2GEJ 473 X (47K)	T	128.2/14.4
R163	7030005240	S.RES ERJ2GEJ 473 X (47K)	T	128.7/16.3
R164	7030005240	S.RES ERJ2GEJ 473 X (47K)	T	129.4/14.4
R165	7030005230	S.RES ERJ2GEJ 334 X (330K)	T	128.7/17.8
R166	7030005230	S.RES ERJ2GEJ 334 X (330K)	T	128.7/18.7
R167	7030005230	S.RES ERJ2GEJ 334 X (330K)	T	129.8/16.2
R168	7030006581	S.RES ERA3YED 122V (1.2K)	T	53.6/47.5
R169	7030007230	S.RES ERA3YED 102V (1K)	T	63.8/42.6
R170	7030010390	S.RES ERA3YED 821V (820)	T	74.1/43.2
R171	7030005090	S.RES ERJ2GEJ 104 X (100K)	T	56.3/46.7
R172	7030008280	S.RES ERJ2GEJ 271 X (270)	B	36.4/46.4
R173	7030007270	S.RES ERJ2GEJ 151 X (150)	B	39/31.2
R174	7030004980	S.RES ERJ2GEJ 101 X (100)	B	34.6/38.7
R175	7030004980	S.RES ERJ2GEJ 101 X (100)	B	33/38.7
R176	7030005590	S.RES ERJ2GEJ 680 X (68)	B	31.3/37.4
R177	7030005590	S.RES ERJ2GEJ 680 X (68)	B	31.3/34.9
R178	7030005240	S.RES ERJ2GEJ 473 X (47K)	T	113.8/37.8
R179	7030008300	S.RES ERJ2GEJ 184 X (180K)	T	117.6/34.6
R180	7030005720	S.RES ERJ2GEJ 563 X (56K)	T	118.3/35.3
R181	7030005220	S.RES ERJ2GEJ 223 X (22K)	T	119/36
R182	7030005120	S.RES ERJ2GEJ 102 X (1K)	T	116.9/33.9
R183	7030005070	S.RES ERJ2GEJ 683 X (68K)	T	103.1/46.8
R184	7030005220	S.RES ERJ2GEJ 223 X (22K)	T	113.8/36.9
R185	7030005070	S.RES ERJ2GEJ 683 X (68K)	B	102.3/45.6
R186	7030005160	S.RES ERJ2GEJ 105 X (1M)	T	81.8/18.9
R187	7030005060	S.RES ERJ2GEJ 333 X (33K)	T	80.6/17.5
R188	7030005090	S.RES ERJ2GEJ 104 X (100K)	T	78.5/14.9

M.=Mounted side (T: Mounted on the Top side, B: Mounted on the Bottom side)
S.=Surface mount

[MAIN-A UNIT] (MDC compatible)

REF NO.	PARTS NO.	DESCRIPTION	M.	H/V LOCATION
R189	7030005720	S.RES ERJ2GEJ 563 X (56K)	T	78.5/15.8
R190	7030005080	S.RES ERJ2GEJ 823 X (82K)	T	80.6/18.4
R191	7030004980	S.RES ERJ2GEJ 101 X (100)	T	60.5/47
R192	7030004980	S.RES ERJ2GEJ 101 X (100)	B	66.3/53.2
R193	7030005050	S.RES ERJ2GEJ 103 X (10K)	B	66.3/45.2
R194	7030005110	S.RES ERJ2GEJ 224 X (220K)	B	62.7/50.8
R195	7030009320	S.RES ERJ2GEJ 4R7 X (4.7)	B	55.8/50.3
R196	7030005120	S.RES ERJ2GEJ 102 X (1K)	B	65.2/42.8
R197	7030005050	S.RES ERJ2GEJ 103 X (10K)	B	64.7/44.5
R198	7030010090	S.RES ERJ2GEJ 180 X (18)	B	36/47.6
R199	7030008280	S.RES ERJ2GEJ 271 X (270)	B	37.3/47.6
R200	7030005050	S.RES ERJ2GEJ 103 X (10K)	B	8.4/20.6
R201	7410001130	S.ARR EXB28V102JX	B	117/51.7
R202	7030005090	S.RES ERJ2GEJ 104 X (100K)	B	122.5/44.8
R203	7030005120	S.RES ERJ2GEJ 102 X (1K)	B	127.4/47.3
R204	7410000750	S.ARR EXB-V4V 104JV (100K)	B	129.6/42.7
R205	7030008010	S.RES ERJ2GEJ 123 X (12K)	T	127.5/40.1
R206	7030005120	S.RES ERJ2GEJ 102 X (1K)	B	127/39.5
R207	7030005050	S.RES ERJ2GEJ 103 X (10K)	T	120.9/37.5
R208	7030005050	S.RES ERJ2GEJ 103 X (10K)	T	121.6/38.2
R209	7410001130	S.ARR EXB28V102JX	B	125.8/40.8
R210	7030008010	S.RES ERJ2GEJ 123 X (12K)	T	124.2/38.4
R211	7030008010	S.RES ERJ2GEJ 123 X (12K)	T	125.9/41.1
R212	7030005160	S.RES ERJ2GEJ 105 X (1M)	T	122.1/41.1
R213	7030005090	S.RES ERJ2GEJ 104 X (100K)	B	55.3/51.8
R214	7030004980	S.RES ERJ2GEJ 101 X (100)	B	56.4/54
R215	7030005050	S.RES ERJ2GEJ 103 X (10K)	B	63.5/61.3
R216	7030005590	S.RES ERJ2GEJ 680 X (68)	B	61.9/62.3
R218	7030010040	S.RES ERJ2GEJ-JPW	B	56.4/51.8
R219	7030005050	S.RES ERJ2GEJ 103 X (10K)	B	46/49.8
R220	7030005040	S.RES ERJ2GEJ 472 X (4.7K)	B	49.3/52
R221	7030005050	S.RES ERJ2GEJ 103 X (10K)	B	44.4/49.8
R222	7030005090	S.RES ERJ2GEJ 104 X (100K)	B	17.7/33.9
R223	7030005090	S.RES ERJ2GEJ 104 X (100K)	B	16.2/33.9
R224	7030005050	S.RES ERJ2GEJ 103 X (10K)	B	15.7/32.7
R225	7030005000	S.RES ERJ2GEJ 471 X (470)	B	8/19.2
R226	7030004980	S.RES ERJ2GEJ 101 X (100)	T	109.7/53.5
R227	7030005090	S.RES ERJ2GEJ 104 X (100K)	B	107.1/49.3
R228	7410001140	S.ARR EXB28V104JX	T	103.3/49
R230	7030005050	S.RES ERJ2GEJ 103 X (10K)	B	124.7/42.7
R232	7030005530	S.RES ERJ2GEJ 100 X (10)	T	120.4/41.1
R233	7410000750	S.ARR EXB-V4V 104JV (100K)	T	130/34.7
R234	7410001130	S.ARR EXB28V102JX	B	129.4/34.4
R236	7030009530	S.RES ERJ2GEJ 270 X (27)	B	63.9/71.5
R237	7030005040	S.RES ERJ2GEJ 472 X (4.7K)	B	65.3/69.7
R238	7030008010	S.RES ERJ2GEJ 123 X (12K)	B	61.9/65.1
R240	7030005570	S.RES ERJ2GEJ 820 X (82)	B	62.4/67.4
R241	7030004980	S.RES ERJ2GEJ 101 X (100)	B	58.5/66
R242	7030004970	S.RES ERJ2GEJ 470 X (47)	T	12/33.1
R243	7030009320	S.RES ERJ2GEJ 4R7 X (4.7)	T	10/36
R244	7030005050	S.RES ERJ2GEJ 103 X (10K) [USA-02]	B	15.1/36.3
	7030004980	S.RES ERJ2GEJ 101 X (100) [EXP-02]		
	7030004980	S.RES ERJ2GEJ 101 X (100) [EUR-02]		
	7030005050	S.RES ERJ2GEJ 103 X (10K) [USA-01]		
	7030004980	S.RES ERJ2GEJ 101 X (100) [EUR-03]		
	7030005050	S.RES ERJ2GEJ 103 X (10K) [CHN-01]		
	7030005050	S.RES ERJ2GEJ 103 X (10K) [USA-11]		
	7030005050	S.RES ERJ2GEJ 103 X (10K) [USA-12]		
R245	7030005530	S.RES ERJ2GEJ 100 X (10)	B	11.9/39.9
R246	7030005090	S.RES ERJ2GEJ 104 X (100K)	B	7.5/38.6
R247	7030004990	S.RES ERJ2GEJ 221 X (220)	B	7.7/36.3
R248	7410001130	S.ARR EXB28V102JX	B	103.9/47.9
R249	7410001130	S.ARR EXB28V102JX	B	123.9/27.6
R250	7410001130	S.ARR EXB28V102JX	B	122.1/25.7
R251	7410001140	S.ARR EXB28V104JX	T	124.7/28.7
R252	7410001140	S.ARR EXB28V104JX	T	122.1/25.7
R253	7030008290	S.RES ERJ2GEJ 183 X (18K)	T	9.5/40.5
R254	7030005050	S.RES ERJ2GEJ 103 X (10K)	T	7.4/42.2
R255	7030005310	S.RES ERJ2GEJ 124 X (120K)	B	6.6/38.6
R257	7030008400	S.RES ERJ2GEJ 182 X (1.8K)	T	9/42.2
R258	7030005170	S.RES ERJ2GEJ 474 X (470K)	T	11/44.5
R259	7030005090	S.RES ERJ2GEJ 104 X (100K)	B	6/45.1
R260	7030005090	S.RES ERJ2GEJ 104 X (100K)	B	6/47
R261	7410001130	S.ARR EXB28V102JX	B	99.7/43.5
R262	7410001130	S.ARR EXB28V102JX	T	100.2/37.4
R263	7410001130	S.ARR EXB28V102JX	B	97/40.7
R264	7410001140	S.ARR EXB28V104JX	T	103.8/37
R265	7030005050	S.RES ERJ2GEJ 103 X (10K)	T	105.2/38.2
R266	7410001130	S.ARR EXB28V102JX	B	120.1/23.5
R267	7410001130	S.ARR EXB28V102JX	B	118.3/21.7
R268	7410001130	S.ARR EXB28V102JX	B	116.5/19.9
R269	7030005090	S.RES ERJ2GEJ 104 X (100K)	T	119.4/20.8
R271	7030004980	S.RES ERJ2GEJ 101 X (100)	T	77.6/78.5
R272	7030007280	S.RES ERJ2GEJ 331 X (330)	T	61/76.5
R273	7030005050	S.RES ERJ2GEJ 103 X (10K) [EXP-02]	T	62.3/76.1
	7030005050	S.RES ERJ2GEJ 103 X (10K) [EUR-02]		
	7030005050	S.RES ERJ2GEJ 103 X (10K) [EUR-03]		
R274	7030004980	S.RES ERJ2GEJ 101 X (100)	T	56.7/69.3
R275	7030005030	S.RES ERJ2GEJ 152 X (1.5K)	T	64.8/73.8
R276	7030007300	S.RES ERJ2GEJ 332 X (3.3K) [USA-02]	T	65.8/73.8
	7030005040	S.RES ERJ2GEJ 472 X (4.7K) [EXP-02]		
	7030005040	S.RES ERJ2GEJ 472 X (4.7K) [EUR-02]		
	7030007300	S.RES ERJ2GEJ 332 X (3.3K) [USA-01]		
	7030005040	S.RES ERJ2GEJ 472 X (4.7K) [EUR-03]		
	7030007300	S.RES ERJ2GEJ 332 X (3.3K) [CHN-01]		
	7030007300	S.RES ERJ2GEJ 332 X (3.3K) [USA-11]		
	7030007300	S.RES ERJ2GEJ 332 X (3.3K) [USA-12]		
R277	7030005050	S.RES ERJ2GEJ 103 X (10K)	B	4.8/45.6
R278	7030005050	S.RES ERJ2GEJ 103 X (10K)	T	132.2/29.9
R279	7030005090	S.RES ERJ2GEJ 104 X (100K)	T	131.3/29.9
R280	7410001130	S.ARR EXB28V102JX	B	95.2/38.9
R281	7030005090	S.RES ERJ2GEJ 104 X (100K)	T	93.7/48.8
R282	7410000750	S.ARR EXB-V4V 104JV (100K)	T	97.2/45.3
R283	7410001130	S.ARR EXB28V102JX	T	103.1/21.7
R284	7030005120	S.RES ERJ2GEJ 102 X (1K)	T	111.2/25.1

[MAIN-A UNIT] (MDC compatible)

REF NO.	PARTS NO.	DESCRIPTION	M.	H/V LOCATION
R285	7410001130	S.ARR EXB28V102JX	B	107.1/19.9
R286	7410001140	S.ARR EXB28V104JX	T	121.7/22.2
R287	7030005580	S.RES ERJ2GEJ 560 X (56) [USA-02]	T	55.7/72.6
	7030004990	S.RES ERJ2GEJ 221 X (220) [EXP-02]		
	7030004990	S.RES ERJ2GEJ 221 X (220) [EUR-02]		
	7030005580	S.RES ERJ2GEJ 560 X (56) [USA-01]		
	7030004990	S.RES ERJ2GEJ 221 X (220) [EUR-03]		
	7030005580	S.RES ERJ2GEJ 560 X (56) [CHN-01]		
	7030005580	S.RES ERJ2GEJ 560 X (56) [USA-11]		
	7030005580	S.RES ERJ2GEJ 560 X (56) [USA-12]		
R288	7030005100	S.RES ERJ2GEJ 154 X (150K)	T	54.1/68.2
R289	7030005170	S.RES ERJ2GEJ 474 X (470K) [USA-02]	B	38/63.7
	7030005170	S.RES ERJ2GEJ 474 X (470K) [USA-01]		
	7030005170	S.RES ERJ2GEJ 474 X (470K) [CHN-01]		
	7030005170	S.RES ERJ2GEJ 474 X (470K) [USA-11]		
	7030005170	S.RES ERJ2GEJ 474 X (470K) [USA-12]		
R290	7520000260	S.POS PRF18BB471QB1RB [USA-02]	T	33.9/63
	7520000260	S.POS PRF18BB471QB1RB [USA-01]		
	7520000260	S.POS PRF18BB471QB1RB [CHN-01]		
	7520000260	S.POS PRF18BB471QB1RB [USA-11]		
	7520000260	S.POS PRF18BB471QB1RB [USA-12]		
R291	7030005120	S.RES ERJ2GEJ 102 X (1K)	T	109.2/24.5
R292	7030006070	S.RES ERJ12YJ101U (100)	B	43.6/66.1
R293	7030005120	S.RES ERJ2GEJ 102 X (1K)	T	50.6/70.5
R294	7030005050	S.RES ERJ2GEJ 103 X (10K)	T	51.7/68.2
R295	7030008290	S.RES ERJ2GEJ 183 X (18K)	T	50.6/71.4
R296	7030005040	S.RES ERJ2GEJ 472 X (4.7K)	T	53.8/64.2
R297	7030008010	S.RES ERJ2GEJ 123 X (12K)	T	50.5/68.6
R298	7030005090	S.RES ERJ2GEJ 104 X (100K)	T	45.6/69.9
R300	7030005050	S.RES ERJ2GEJ 103 X (10K)	B	99.9/59.6
R301	7030007290	S.RES ERJ2GEJ 222 X (2.2K)	T	106.2/55.6
R302	7030000480	S.RES MCR10EZHJ 6.8K (682)	T	79/64.4
R303	7030000480	S.RES MCR10EZHJ 6.8K (682)	T	80.9/64.4
R304	7030000440	S.RES MCR10EZHJ 3.3K (332)	T	82.8/64.4
R305	7030005050	S.RES ERJ2GEJ 103 X (10K)	T	40.3/19.4
R306	7030005040	S.RES ERJ2GEJ 472 X (4.7K)	T	41/21.7
R307	7030005050	S.RES ERJ2GEJ 103 X (10K)	B	27/63
R309	7030005070	S.RES ERJ2GEJ 683 X (68K)	T	89.9/7.2
R310	7030004980	S.RES ERJ2GEJ 101 X (100)	B	109.3/62.8
R311	7030000220	S.RES MCR10EZHJ 47 (470)	B	15/76.9
R312	7030005700	S.RES ERJ2GEJ 274 X (270K)	B	31.5/62.4
R313	7030003370	S.RES ERJ3GEYJ 271 V (270)	B	8.6/54
R314	7030005600	S.RES ERJ2GEJ 273 X (27K)	B	3/53
R315	7030000220	S.RES MCR10EZHJ 47 (470)	B	3.5/57.4
R316	7030005170	S.RES ERJ2GEJ 474 X (470K)	T	90.8/11.3
R317	7030005160	S.RES ERJ2GEJ 105 X (1M)	B	108.3/83.7
R318	7030005160	S.RES ERJ2GEJ 105 X (1M)	B	112.5/82.7
R319	7030005120	S.RES ERJ2GEJ 102 X (1K)	B	112.1/81.5
R320	7030005160	S.RES ERJ2GEJ 105 X (1M)	B	107.2/82.4
R321	7030004970	S.RES ERJ2GEJ 470 X (47)	B	108.4/82
R322	7030005600	S.RES ERJ2GEJ 273 X (27K)	B	2.1/79.2
R323	7030003370	S.RES ERJ3GEYJ 271 V (270)	B	6.3/78.7
R324	7030000620	S.RES MCR10EZHJ 100 K (104)	B	5.6/85.5
R325	7030005050	S.RES ERJ2GEJ 103 X (10K)	B	130.5/45.2
R326	7030005090	S.RES ERJ2GEJ 104 X (100K)	B	131.8/51.7
R327	7030005120	S.RES ERJ2GEJ 102 X (1K)	B	131.1/54.2
R328	7030005090	S.RES ERJ2GEJ 104 X (100K)	B	134.2/51.7
R332	7030005090	S.RES ERJ2GEJ 104 X (100K)	T	109.6/27.9
R333	7030005120	S.RES ERJ2GEJ 102 X (1K)	T	109.6/26.9
R334	7520000270	S.POS PRG21BC4R7MM1RA	T	101.4/79.7
R335	7030005050	S.RES ERJ2GEJ 103 X (10K)	T	101.8/83.9
R336	7030005120	S.RES ERJ2GEJ 102 X (1K)	T	111.3/78.5
R337	7410001130	S.ARR EXB28V102JX	T	104.6/75.9
R338	7030005651	S.RES ERA3YKD 304V (300K)	T	113.6/54.3
R339	7030005871	S.RES ERA3YKD 104V (100K)	T	113.6/52.9
R340	7030003560	S.RES ERJ3GEYJ 103 V (10K)	T	136.3/65.7
R341	7030003560	S.RES ERJ3GEYJ 103 V (10K)	B	130.7/85.9
R342	7030005090	S.RES ERJ2GEJ 104 X (100K)	B	135.4/52.2
R343	7030007290	S.RES ERJ2GEJ 222 X (2.2K)	B	138.2/49.4
R344	7030008270	S.RES RR0510P-104-D (100K)	B	133.3/54.6
R345	7030008270	S.RES RR0510P-104-D (100K)	B	133.3/56.3
R346	7030008410	S.RES ERJ2GEJ 392 X (3.9K)	B	137/52.2
R347	7030005050	S.RES ERJ2GEJ 103 X (10K)	B	137.8/53.7
R348	7030005700	S.RES ERJ2GEJ 274 X (270K)	B	131/75.5
R349	7030005090	S.RES ERJ2GEJ 104 X (100K)	B	129.8/76.5
R350	7030005120	S.RES ERJ2GEJ 102 X (1K)	B	139.1/47.8
R351	7030004980	S.RES ERJ2GEJ 101 X (100)	B	136.3/38.1
R352	7030008300	S.RES ERJ2GEJ 184 X (180K)	B	139.7/39
R353	7030005230	S.RES ERJ2GEJ 334 X (330K)	B	138.2/47.8
R354	7030010040	S.RES ERJ2GEJ-JPW	T	140.4/36
R355	7030008280	S.RES ERJ2GEJ 271 X (270)	B	139.7/34.3
R356	7540000290	ABS ERZV10D220		
R359	7030005090	S.RES ERJ2GEJ 104 X (100K)	B	114.8/82.9
R360	7030005090	S.RES ERJ2GEJ 104 X (100K)	T	80.6/5.3
R361	7030005600	S.RES ERJ2GEJ 273 X (27K)	T	78.4/5.3
R362	7030005050	S.RES ERJ2GEJ 103 X (10K)	T	124.8/50.2
R363	7030005120	S.RES ERJ2GEJ 102 X (1K)	T	42.9/38.3
R364	7030009140	S.RES ERJ2GEJ 272 X (2.7K)	T	42.9/37.4
R365	7030004970	S.RES ERJ2GEJ 470 X (47)	T	38.3/37.9
R366	7030005090	S.RES ERJ2GEJ 104 X (100K)	B	131.4/63.4
R367	7030005040	S.RES ERJ2GEJ 472 X (4.7K) [USA-02]	B	130.1/63
	7030005040	S.RES ERJ2GEJ 472 X (4.7K) [EXP-02]		
	7030005040	S.RES ERJ2GEJ 472 X (4.7K) [EUR-02]		
	7030005040	S.RES ERJ2GEJ 472 X (4.7K) [USA-01]		
	7030005040	S.RES ERJ2GEJ 472 X (4.7K) [EUR-03]		
	7030005040	S.RES ERJ2GEJ 472 X (4.7K) [CHN-01]		
	7030005040	S.RES ERJ2GEJ 472 X (4.7K) [USA-11]		
	7030005000	S.RES ERJ2GEJ 471 X (470) [USA-12]		
R368	7030005050	S.RES ERJ2GEJ 103 X (10K)	T	78.3/7.6
R370	7030005010	S.RES ERJ2GEJ 681 X (680)	T	71.2/70.4
R371	7030005050	S.RES ERJ2GEJ 103 X (10K)	T	119.5/84.6
R372	7030005040	S.RES ERJ2GEJ 472 X (4.7K)	T	25.9/8.1
R373	7030005040	S.RES ERJ2GEJ 472 X (4.7K)	T	74/21.6
R375	7030005030	S.RES ERJ2GEJ 152 X (1.5K)	T	27.6/5.3
R376	7030005160	S.RES ERJ2GEJ 105 X (1M)	B	109.1/12.1

M.=Mounted side (T: Mounted on the Top side, B: Mounted on the Bottom side)
S.=Surface mount

[MAIN-A UNIT] (MDC compatible)

REF NO.	PARTS NO.	DESCRIPTION	M.	H/V LOCATION
R377	7030005160	S.RES ERJ2GEJ 105 X (1M)	B	110.9/12.1
R378	7410001140	S.ARR EXB28V104JX	B	100.7/18.3
R379	7030005090	S.RES ERJ2GEJ 104 X (100K)	T	111.6/23.8
R386	7030005120	S.RES ERJ2GEJ 102 X (1K)	T	105.8/85.1
R387	7030005120	S.RES ERJ2GEJ 102 X (1K)	T	107.8/85.1
R389	7030005090	S.RES ERJ2GEJ 104 X (100K)	T	110.4/10.7
R390	7030008300	S.RES ERJ2GEJ 184 X (180K)	B	23/10.5
R391	7030005120	S.RES ERJ2GEJ 102 X (1K)	B	23.9/7.3
R392	7030008400	S.RES ERJ2GEJ 182 X (1.8K)	B	29.2/5.6
R393	7030004980	S.RES ERJ2GEJ 101 X (100)	B	28.3/7.3
R394	7030004980	S.RES ERJ2GEJ 101 X (100)	B	23/8.9
R395	7030005290	S.RES ERJ2GEJ 682 X (6.8K)	B	22.1/7.3
R396	7030009290	S.RES ERJ2GEJ 562 X (5.6K)	B	22.1/5.6
R397	7030005120	S.RES ERJ2GEJ 102 X (1K)	B	79.8/46.1
R398	7030005120	S.RES ERJ2GEJ 102 X (1K)	T	79.3/41.3
R399	7030005050	S.RES ERJ2GEJ 103 X (10K)	B	95.8/10
R400	7030005030	S.RES ERJ2GEJ 152 X (1.5K)	B	23/5.6
C1	4030017420	S.CER ECJ0EC1H470J	T	88.9/54.3
C2	4030017420	S.CER ECJ0EC1H470J	T	89.9/54.3
C3	4030017420	S.CER ECJ0EC1H470J	T	41.5/15.4
C4	4030017420	S.CER ECJ0EC1H470J	B	50/15
C5	4030017460	S.CER ECJ0EB1E102K	T	88/32.3
C6	4550007080	S.TAN TEESVA 1C 106M8R	T	80.8/55.1
C8	4030017420	S.CER ECJ0EC1H470J	T	89.9/52
C9	4030016930	S.CER ECJ0EB1A104K	T	88.9/52
C10	4030016930	S.CER ECJ0EB1A104K	T	80.6/50.7
C11	4030016930	S.CER ECJ0EB1A104K	T	10.9/18.8
C12	4030016930	S.CER ECJ0EB1A104K	T	8.5/7.4
C13	4030016930	S.CER ECJ0EB1A104K	T	85.6/10
C14	4030016930	S.CER ECJ0EB1A104K	T	86.6/10
C15	4030017460	S.CER ECJ0EB1E102K	T	41.5/7.7
C16	4550000460	S.TAN TEESVA 1C 105M8R	T	42.7/6.2
C17	4550000460	S.TAN TEESVA 1C 105M8R	B	42.7/6.2
C18	4030017420	S.CER ECJ0EC1H470J	T	41.5/14.5
C19	4030017420	S.CER ECJ0EC1H470J	B	50/15.9
C20	4030016970	S.CER ECJ0EB1C223K	B	100.9/52.3
C21	4030017420	S.CER ECJ0EC1H470J	T	41.5/13.5
C22	4030017420	S.CER ECJ0EC1H470J	T	41.5/12.6
C23	4030016930	S.CER ECJ0EB1A104K	T	51.8/5.6
C24	4030017660	S.CER ECJ0EC1H330J	B	39.8/9.8
C25	4030017420	S.CER ECJ0EC1H470J	T	61.4/6
C26	4030016930	S.CER ECJ0EB1A104K	B	37.2/5.8
C27	4030018240	S.CER ECJ0EB1E562K	B	36.3/7.5
C28	4030016790	S.CER ECJ0EB1C103K	T	79.3/7.6
C29	4030017460	S.CER ECJ0EB1E102K	T	79/13.6
C30	4030016930	S.CER ECJ0EB1A104K	T	78.1/13.6
C31	4030017460	S.CER ECJ0EB1E102K	T	80.6/51.7
C32	4030017500	S.CER ECJ0EC1H560J	B	33.3/15.9
C33	4030016930	S.CER ECJ0EB1A104K	B	34.8/12.8
C34	4030017570	S.CER ECJ0EC1H040B	B	32.1/15.4
C35	4030017590	S.CER ECJ0EC1H070C	B	30.9/15.9
C36	4030016930	S.CER ECJ0EB1A104K	T	22.4/14.9
C37	4030017360	S.CER ECJ0EC1H030B	B	28.3/15.4
C38	4030016930	S.CER ECJ0EB1A104K	T	22/6.2
C39	4030016930	S.CER ECJ0EB1A104K	B	13.6/6.2
C40	4030016930	S.CER ECJ0EB1A104K	T	23.8/6.2
C41	4030016930	S.CER ECJ0EB1A104K	T	22/12.5
C42	4030016930	S.CER ECJ0EB1A104K	T	23/12.5
C43	4030017680	S.CER ECJ0EC1H820J	T	26.4/9.4
C44	4030017680	S.CER ECJ0EC1H820J	T	25.5/9.4
C45	4030017790	S.CER ECJ0EB1E682K	B	91.7/10
C46	4030016930	S.CER ECJ0EB1A104K	B	93.8/10
C47	4030016970	S.CER ECJ0EB1C223K	T	92.1/15.1
C48	4030017710	S.CER ECJ0EC1H181J	B	49.7/9.1
C49	4550007080	S.TAN TEESVA 1C 106M8R	T	52.1/15.4
C50	4030017460	S.CER ECJ0EB1E102K	T	54.3/12
C51	4030017400	S.CER ECJ0EC1H220J	T	47.8/19
C52	4030017400	S.CER ECJ0EC1H220J	T	44.7/7.8
C53	4030017900	S.CER ECJ0EB1C123K	T	59.1/10.6
C54	4030018080	S.CER ECJ0EB1H182K	T	59.1/11.5
C55	4030016790	S.CER ECJ0EB1C103K	T	64.5/57
C56	4030017620	S.CER ECJ0EC1H100C	T	87.7/35.5
C57	4030016930	S.CER ECJ0EB1A104K	T	80.1/36.7
C58	4030017430	S.CER ECJ0EC1H101J	T	85.2/38.6
C59	4030017460	S.CER ECJ0EB1E102K	T	81.8/24.3
C60	4030017420	S.CER ECJ0EC1H470J	T	82.9/41.5
C63	4030017620	S.CER ECJ0EC1H100C	T	84/39.1
C64	4030017780	S.CER ECJ0EB1E472K	T	81.3/41.3
C65	4030017460	S.CER ECJ0EB1E102K	T	27.6/10.6
C66	4550006050	S.TAN TEESVA 0J 106M8R	T	31.1/6.8
C67	4030017460	S.CER ECJ0EB1E102K	T	27.6/7.1
C68	4030017460	S.CER ECJ0EB1E102K	T	30.5/9
C69	4030017460	S.CER ECJ0EB1E102K	T	32.6/15.4
C70	4030017420	S.CER ECJ0EC1H470J	B	28.3/13.4
C71	4030016940	S.CER ECJ0EB1A393K	B	91.7/8.3
C72	4030018860	S.CER ECJ0EB0J105K	B	50.7/11
C73	4030017750	S.CER ECJ0EB1E122K	B	51.3/16.6
C74	4030016930	S.CER ECJ0EB1A104K	B	52.3/16.6
C75	4030016930	S.CER ECJ0EB1A104K	B	56.2/12.6
C77	4030017460	S.CER ECJ0EB1E102K	B	54.2/16.6
C78	4030017460	S.CER ECJ0EB1E102K	B	53.7/9
C79	4550007080	S.TAN TEESVA 1C 106M8R	T	66.5/55.3
C80	4030017780	S.CER ECJ0EB1E472K	B	79.2/35
C81	4550000460	S.TAN TEESVA 1C 105M8R	B	82.2/36.4
C82	4030017460	S.CER ECJ0EB1E102K	B	84.1/26.9
C83	4550000460	S.TAN TEESVA 1C 105M8R	B	84/32.5
C84	4030017460	S.CER ECJ0EB1E102K	T	78.2/48.8
C85	4030017380	S.CER ECJ0EC1H050B	B	77.1/47.2
C86	4030017350	S.CER ECJ0EC1H020B	B	74.8/48.3
C87	4030017580	S.CER ECJ0EC1H060C	B	73.7/48.3
C88	4030017380	S.CER ECJ0EC1H050B	B	72.4/48.6
C89	4030017580	S.CER ECJ0EC1H060C	B	71.1/49.1
C90	4030017350	S.CER ECJ0EC1H020B	B	70/49.1

[MAIN-A UNIT] (MDC compatible)

REF NO.	PARTS NO.	DESCRIPTION	M.	H/V LOCATION
C91	4030016790	S.CER ECJ0EB1C103K	T	27.3/17.3
C92	4030017460	S.CER ECJ0EB1E102K	T	25.1/22.4
C93	4030017680	S.CER ECJ0EC1H820J	T	32.6/12.6
C94	4030017460	S.CER ECJ0EB1E102K	B	27.8/12.5
C95	4030016790	S.CER ECJ0EB1C103K	T	28.9/20.1
C98	4030016930	S.CER ECJ0EB1A104K	B	89.3/7.3
C99	4030016930	S.CER ECJ0EB1A104K	B	90.7/14.8
C100	4030016930	S.CER ECJ0EB1A104K	T	87.3/14.3
C101	4030017710	S.CER ECJ0EC1H181J	T	83.9/7.2
C102	4030016930	S.CER ECJ0EB1A104K	T	108/32.8
C103	4030016930	S.CER ECJ0EB1A104K	B	55.3/19.3
C104	4550003250	S.TAN TEESVA 1V 474M8R	B	67.2/24.2
C105	4030017420	S.CER ECJ0EC1H470J	T	49.2/29.4
C106	4030017460	S.CER ECJ0EB1E102K	B	78/29.1
C107	4030016930	S.CER ECJ0EB1A104K	B	54.2/28.8
C109	4550006480	S.TAN TEESVA 1C 475M8R	B	56.1/27.7
C110	4030017420	S.CER ECJ0EC1H470J	T	60.1/27
C111	4030016930	S.CER ECJ0EB1A104K	B	66.3/30.3
C112	4030017460	S.CER ECJ0EB1E102K	B	67.4/30.3
C113	4030017420	S.CER ECJ0EC1H470J	T	72.1/26.6
C114	4030016790	S.CER ECJ0EB1C103K	T	24.2/22.3
C115	4030016790	S.CER ECJ0EB1C103K	T	21.4/22
C116	4030016790	S.CER ECJ0EB1C103K	T	28.5/22.6
C118	4030017640	S.CER ECJ0EC1H150J	T	20.5/28.7
C120	4030016790	S.CER ECJ0EB1C103K	T	32.6/22.5
C122	4030017660	S.CER ECJ0EC1H330J	T	39.8/28.9
C124	4030016930	S.CER ECJ0EB1A104K	B	90.3/18.9
C125	4030017460	S.CER ECJ0EB1E102K	B	128.5/52.6
C126	4030016930	S.CER ECJ0EB1A104K	T	79.6/20.6
C127	4030016930	S.CER ECJ0EB1A104K	B	82.8/20.1
C128	4030016930	S.CER ECJ0EB1A104K	T	78.4/19.3
C129	4030016930	S.CER ECJ0EB1A104K	B	63.7/16.4
C130	4030016930	S.CER ECJ0EB1A104K	B	135.6/25.4
C131	4030017660	S.CER ECJ0EC1H330J	T	135.9/25.7
C132	4030017660	S.CER ECJ0EC1H330J	T	135.9/18
C133	4030018010	S.CER ECJ0EC1H360J	T	48.1/35.5
C134	4030017640	S.CER ECJ0EC1H150J	T	49.4/34.8
C135	4030017660	S.CER ECJ0EC1H330J	T	64.1/32.5
C136	4030017340	S.CER ECJ0EC1H010B	T	71.1/30.8
C137	4030017570	S.CER ECJ0EC1H040B	T	71.1/29.9
C138	4030017730	S.CER ECJ0EB1E471K	T	71.9/33
C139	4030017390	S.CER ECJ0EC1H180J	T	62.1/32
C140	4030017360	S.CER ECJ0EC1H030B	T	72.5/30.7
C141	4030017360	S.CER ECJ0EC1H030B	T	72.1/29
C142	4030018860	S.CER ECJ0EB0J105K	T	89.5/12.7
C143	4030017400	S.CER ECJ0EC1H220J	T	71.3/36.6
C145	4030016790	S.CER ECJ0EB1C103K	T	31.4/35.2
C146	4030017610	S.CER ECJ0EC1H090C	T	35/33.1
C147	4030016790	S.CER ECJ0EB1C103K	T	34.5/35.2
C148	4030016790	S.CER ECJ0EB1C103K	T	30.9/26.4
C149	4030016930	S.CER ECJ0EB1A104K	B	78.2/17.4
C150	4030018560	S.CER C2012 JB 1A 475K-T	B	86.9/19.8
C151	4030016930	S.CER ECJ0EB1A104K	T	112.1/46
C152	4030016930	S.CER ECJ0EB1A104K	T	111.6/34.3
C153	4030017460	S.CER ECJ0EB1E102K	T	111.6/35.2
C154	4030018860	S.CER ECJ0EB0J105K	T	82.7/19.8
C155	4030017420	S.CER ECJ0EC1H470J	T	111.1/38.7
C156	4030017910	S.CER ECJ0EB1H152K	T	104.9/42.3
C157	4030017420	S.CER ECJ0EC1H470J	T	110.8/48.6
C158	4030017430	S.CER ECJ0EC1H101J	T	111.1/37.8
C159	4030017460	S.CER ECJ0EB1E102K	T	120.3/5.5
C160	4030017460	S.CER ECJ0EB1E102K	B	130.6/25.4
C161	4030018010	S.CER ECJ0EC1H360J	T	50.8/43.8
C162	4030017590	S.CER ECJ0EC1H070C	T	52.1/43.4
C163	4030017660	S.CER ECJ0EC1H330J	T	58.7/39.4
C164	4030017660	S.CER ECJ0EC1H330J	T	48.6/45.8
C165	4030017660	S.CER ECJ0EC1H330J	T	49.9/45.4
C166	4030017580	S.CER ECJ0EC1H060C	T	60.1/38.9
C167	4030017420	S.CER ECJ0EC1H470J	T	70/38.9
C168	4030017660	S.CER ECJ0EC1H330J	T	59.1/40.8
C169	4030017660	S.CER ECJ0EC1H330J	T	60.7/40.4
C170	4030017550	S.CER ECJ0EC1H1R5B	T	70.4/36.6
C171	4030017570	S.CER ECJ0EC1H040B	T	70/37.9
C172	4030017400	S.CER ECJ0EC1H220J	T	70/42.9
C173	4030017400	S.CER ECJ0EC1H220J	T	70/43.9
C174	4030017640	S.CER ECJ0EC1H150J	T	38.3/38.8
C175	4030016790	S.CER ECJ0EB1C103K	B	41.4/39.4
C176	4030016930	S.CER ECJ0EB1A104K	B	41/33.2
C177	4030017730	S.CER ECJ0EB1E471K	B	41/32.2
C178	4030016790	S.CER ECJ0EB1C103K	B	34.5/33
C180	4030017740	S.CER ECJ0EB1E821K	T	109.2/48.6
C181	4030016930	S.CER ECJ0EB1A104K	T	112.1/43.2
C182	4030016780	S.CER ECJ0EB1C153K	T	112.1/39.6
C183	4030017420	S.CER ECJ0EC1H470J	T	104.9/45
C184	4030017760	S.CER ECJ0EB1H222K	T	104.9/45.9
C185	4030017690	S.CER ECJ0EC1H121J	T	107.8/48.6
C186	4030016790	S.CER ECJ0EB1C103K	T	51.7/45.4
C187	4030017460	S.CER ECJ0EB1E102K	T	52.6/45.4
C188	4030016790	S.CER ECJ0EB1C103K	T	62.7/40.4
C189	4030017460	S.CER ECJ0EB1E102K	T	63.7/40.4
C190	4030017540	S.CER ECJ0EC1HR75B	T	55/48.3
C191	4030016790	S.CER ECJ0EB1C103K	T	70/40.9
C192	4030017540	S.CER ECJ0EC1HR75B	T	57.7/43
C193	4030017460	S.CER ECJ0EB1E102K	T	70/39.9
C194	4030017530	S.CER ECJ0EC1H0R5B	T	60/44.4
C195	4030016930	S.CER ECJ0EB1A104K	B	39/30
C196	4030017730	S.CER ECJ0EB1E471K	B	38.1/33.2
C197	4030016930	S.CER ECJ0EB1A104K	B	38.1/32.2
C198	4030017730	S.CER ECJ0EB1E471K	B	31.3/38.3
C199	4030016930	S.CER ECJ0EB1A104K	B	31.3/39.2
C200	4030016930	S.CER ECJ0EB1A104K	B	31.3/34
C201	4030017730	S.CER ECJ0EB1E471K	B	31.3/33.1
C202	4030017460	S.CER ECJ0EB1E102K	T	112.1/36.9
C203	4030017460	S.CER ECJ0EB1E102K	B	100.9/47
C205	4030018900	S.CER ECJ0EB0J474K	T	78.4/18.4

M.=Mounted side (T: Mounted on the Top side, B: Mounted on the Bottom side)
S.=Surface mount

[MAIN-A UNIT] (MDC compatible)

REF NO.	PARTS NO.	DESCRIPTION		M.	H/V LOCATION
C206	4030016930	S.CER ECJ0EB1A104K		T	78.5/16.7
C207	4030017730	S.CER ECJ0EB1E471K		T	61/45.7
C208	4030017460	S.CER ECJ0EB1E102K		T	60/45.7
C209	4030017460	S.CER ECJ0EB1E102K		B	65/52.7
C210	4030017590	S.CER ECJ0EC1H070C		B	57.6/50.3
C211	4030017620	S.CER ECJ0EC1H100C		B	60/51.4
C212	4030017460	S.CER ECJ0EB1E102K		B	63.8/50.8
C214	4030017460	S.CER ECJ0EB1E102K		B	66.8/41.3
C215	4030017390	S.CER ECJ0EC1H180J		B	38.5/47.6
C216	4030017660	S.CER ECJ0EC1H330J		B	43.1/47.6
C217	4030017730	S.CER ECJ0EB1E471K		B	25/32.7
C218	4030016930	S.CER ECJ0EB1A104K		B	25/31.7
C219	4030017650	S.CER ECJ0EC1H270J		B	23/36.3
C220	4030017600	S.CER ECJ0EC1H080C		B	23/38
C221	4030016930	S.CER ECJ0EB1A104K		B	5.6/23.2
C222	4030017030	S.CER ECJ0EB1A273K		B	128.6/45.3
C223	4030016930	S.CER ECJ0EB1A104K		B	126.3/48.2
C224	4030017640	S.CER ECJ0EC1H150J		T	124.2/40.1
C225	4030016790	S.CER ECJ0EB1C103K		T	124.2/37.4
C226	4030017580	S.CER ECJ0EC1H060C		T	124.2/41.1
C227	4030017460	S.CER ECJ0EB1E102K		B	57.6/53.5
C228	4030017460	S.CER ECJ0EB1E102K		B	56.4/53.1
C229	4030017620	S.CER ECJ0EC1H100C		B	52.1/53.1
C230	4030017460	S.CER ECJ0EB1E102K		B	63.5/62.3
C231	4030017360	S.CER ECJ0EC1H030B		B	66.3/52.2
C232	4030017460	S.CER ECJ0EB1E102K		B	68.6/49.5
C235	4030017460	S.CER ECJ0EB1E102K		B	44.4/50.7
C236	4030017390	S.CER ECJ0EC1H180J		B	47.8/48.1
C237	4030017620	S.CER ECJ0EC1H100C		B	47.4/49.4
C240	4030017460	S.CER ECJ0EB1E102K		B	18.9/34.4
C241	4030017570	S.CER ECJ0EC1H040B	[USA-02]	B	17/37.7
	4030017360	S.CER ECJ0EC1H030B	[EXP-02]		
	4030017360	S.CER ECJ0EC1H030B	[EUR-02]		
	4030017570	S.CER ECJ0EC1H040B	[USA-01]		
	4030017360	S.CER ECJ0EC1H030B	[EUR-03]		
	4030017570	S.CER ECJ0EC1H040B	[CHN-01]		
	4030017570	S.CER ECJ0EC1H040B	[USA-11]		
	4030017570	S.CER ECJ0EC1H040B	[USA-12]		
C242	4030017460	S.CER ECJ0EB1E102K		B	15/34.4
C243	4030017460	S.CER ECJ0EB1E102K		B	18.9/33.5
C244	4030017460	S.CER ECJ0EB1E102K		B	15.7/31.7
C245	4550006780	S.TAN TEESVB2 0J 476M8R		B	5.6/18.7
C246	4030016930	S.CER ECJ0EB1A104K		B	105.1/52.2
C247	4030016930	S.CER ECJ0EB1A104K		B	107/52.9
C248	4030016930	S.CER ECJ0EB1A104K		B	108.1/52
C249	4030018900	S.CER ECJ0EB0J474K		B	121.8/47.4
C250	4030017630	S.CER ECJ0EC1H120J		T	120.4/40.1
C251	4030017400	S.CER ECJ0EC1H220J		B	61.9/64.2
C252	4030017420	S.CER ECJ0EC1H470J		B	62.6/71.1
C253	4030017730	S.CER ECJ0EB1E471K		B	61.6/71.1
C254	4030017420	S.CER ECJ0EC1H470J		B	63.9/69.5
C256	4030017460	S.CER ECJ0EB1E102K		B	59.7/65.5
C257	4030017460	S.CER ECJ0EB1E102K		B	63.4/67.4
C258	4030017460	S.CER ECJ0EB1E102K		T	13.9/32.5
C259	4030017460	S.CER ECJ0EB1E102K		T	10/35
C260	4030017590	S.CER ECJ0EC1H070C		B	14.2/36.3
C261	4030017460	S.CER ECJ0EB1E102K		B	9.5/33.9
C262	4030017460	S.CER ECJ0EB1E102K		B	13.7/37.7
C263	4030017490	S.CER C1608 JB 1A 105K-T		T	14.1/33.7
C264	4030017350	S.CER ECJ0EC1H020B		B	8.4/38.6
C265	4030017420	S.CER ECJ0EC1H470J	[EXP-02]	B	8.6/36.3
	4030017420	S.CER ECJ0EC1H470J	[EUR-02]		
	4030017420	S.CER ECJ0EC1H470J	[EUR-03]		
C266	4030017460	S.CER ECJ0EB1E102K	[EXP-02]	B	9.5/36.3
	4030017460	S.CER ECJ0EB1E102K	[EUR-02]		
	4030017460	S.CER ECJ0EB1E102K	[EUR-03]		
C267	4030017460	S.CER ECJ0EB1E102K		B	63.9/70.5
C268	4030017640	S.CER ECJ0EC1H150J		B	68.2/69.1
C269	4030017390	S.CER ECJ0EC1H180J	[USA-02]	B	69.7/69.1
	4030017650	S.CER ECJ0EC1H270J	[EXP-02]		
	4030017650	S.CER ECJ0EC1H270J	[EUR-02]		
	4030017390	S.CER ECJ0EC1H180J	[USA-01]		
	4030017650	S.CER ECJ0EC1H270J	[EUR-03]		
	4030017390	S.CER ECJ0EC1H180J	[CHN-01]		
	4030017390	S.CER ECJ0EC1H180J	[USA-11]		
	4030017390	S.CER ECJ0EC1H180J	[USA-12]		
C270	4030017390	S.CER ECJ0EC1H180J		B	71.2/69
C271	4030017400	S.CER ECJ0EC1H220J	[USA-02]	T	74.3/71.7
	4030017390	S.CER ECJ0EC1H180J	[EXP-02]		
	4030017390	S.CER ECJ0EC1H180J	[EUR-02]		
	4030017400	S.CER ECJ0EC1H220J	[USA-01]		
	4030017390	S.CER ECJ0EC1H180J	[EUR-03]		
	4030017400	S.CER ECJ0EC1H220J	[CHN-01]		
	4030017400	S.CER ECJ0EC1H220J	[USA-11]		
	4030017400	S.CER ECJ0EC1H220J	[USA-12]		
C272	4030016930	S.CER ECJ0EB1A104K		T	7.9/39.5
C273	4030016930	S.CER ECJ0EB1A104K		T	9.5/39.5
C274	4030017460	S.CER ECJ0EB1E102K		T	7.4/41.2
C275	4030016930	S.CER ECJ0EB1A104K		T	15/41
C276	4030017620	S.CER ECJ0EC1H100C		B	10.5/41
C277	4030017460	S.CER ECJ0EB1E102K		T	14/41
C278	4030017340	S.CER ECJ0EC1H010B		B	8.9/43.6
C279	4030017640	S.CER ECJ0EC1H150J		B	6.9/44.2
C280	4030017550	S.CER ECJ0EC1H1R5B		B	9.4/46.1
C281	4030017420	S.CER ECJ0EC1H470J		T	97.9/34.2
C282	4030017420	S.CER ECJ0EC1H470J		T	102.3/40.9
C283	4030017420	S.CER ECJ0EC1H470J		B	97.4/44.6
C284	4030017420	S.CER ECJ0EC1H470J		T	94.8/35.5
C285	4030017420	S.CER ECJ0EC1H470J		B	94.2/44.4
C286	4030017420	S.CER ECJ0EC1H470J		T	92.1/43.3
C287	4030017420	S.CER ECJ0EC1H470J		T	92.1/41.6
C288	4030017460	S.CER ECJ0EB1E102K		B	4.8/46.5

[MAIN-A UNIT] (MDC compatible)

REF NO.	PARTS NO.	DESCRIPTION		M.	H/V LOCATION
C289	4030017640	S.CER ECJ0EC1H150J	[USA-02]	B	6.6/34.2
	4030017640	S.CER ECJ0EC1H150J	[USA-01]		
	4030017640	S.CER ECJ0EC1H150J	[CHN-01]		
	4030017640	S.CER ECJ0EC1H150J	[USA-11]		
	4030017640	S.CER ECJ0EC1H150J	[USA-12]		
C290	4030017400	S.CER ECJ0EC1H220J		T	74.3/73.6
C291	4030017730	S.CER ECJ0EB1E471K		T	69.3/76.1
C292	4550000560	S.TAN TEESVA 1V 334M8R		T	67.6/74.4
C294	4030017420	S.CER ECJ0EC1H470J		T	70.4/76.1
C295	4030017420	S.CER ECJ0EC1H470J		T	56.7/67.3
C296	4510008530	S.ELE EEE1HA2R2SR		T	59.6/80
C297	4030017460	S.CER ECJ0EB1E102K		T	56.7/68.3
C299	4030017640	S.CER ECJ0EC1H150J		B	6.9/47.9
C301	4030017580	S.CER ECJ0EC1H060C		B	13.2/49.5
C302	4030017460	S.CER ECJ0EB1E102K		B	4.4/44.4
C303	4030016930	S.CER ECJ0EB1A104K		B	129.6/32
C304	4030017420	S.CER ECJ0EC1H470J		B	90/43.4
C305	4030011140	S.CER GRM31M2C2H120JV01L			
		(GRM42-6 CH)		T	27.6/78.7
C306	4030011120	S.CER GRM31M2C2H100JV01L			
		(GRM42-6 CH)		T	27.6/76.1
C307	4030011120	S.CER GRM31M2C2H100JV01L			
		(GRM42-6 CH)		T	27.7/71.8
C308	4030011070	S.CER GRM31M2C2H5R0CY21L			
		(GRM42-6 CH)	[USA-02]	T	27.7/69.2
	4030011140	S.CER GRM31M2C2H120JV01L			
		(GRM42-6 CH)	[EXP-02]		
	4030011140	S.CER GRM31M2C2H120JV01L			
		(GRM42-6 CH)	[EUR-02]		
	4030011070	S.CER GRM31M2C2H5R0CY21L			
		(GRM42-6 CH)	[USA-01]		
	4030011140	S.CER GRM31M2C2H120JV01L			
		(GRM42-6 CH)	[EUR-03]		
	4030011070	S.CER GRM31M2C2H5R0CY21L			
		(GRM42-6 CH)	[CHN-01]		
	4030011070	S.CER GRM31M2C2H5R0CY21L			
		(GRM42-6 CH)	[USA-11]		
	4030011070	S.CER GRM31M2C2H5R0CY21L			
		(GRM42-6 CH)	[USA-12]		
C309	4030017460	S.CER ECJ0EB1E102K		T	71.5/76.1
C310	4030017420	S.CER ECJ0EC1H470J		T	43/76.1
C311	4030017460	S.CER ECJ0EB1E102K		T	44.1/76.1
C312	4030017730	S.CER ECJ0EB1E471K		T	45.3/76.1
C313	4510008680	S.ELE EEE1EA220SP		T	51.7/77.7
C314	4030017730	S.CER ECJ0EB1E471K		B	40.2/68.3
C315	4030017460	S.CER ECJ0EB1E102K		T	55.7/73.6
C316	4030016790	S.CER ECJ0EB1C103K		T	54.1/72.6
C317	4030011600	S.CER C1608 JB 1E 104K-T		T	54.1/67
C318	4030017460	S.CER ECJ0EB1E102K	[USA-02]	T	35.1/63.3
	4030017460	S.CER ECJ0EB1E102K	[USA-01]		
	4030017460	S.CER ECJ0EB1E102K	[CHN-01]		
	4030017460	S.CER ECJ0EB1E102K	[USA-11]		
	4030017460	S.CER ECJ0EB1E102K	[USA-12]		
C319	4030017460	S.CER ECJ0EB1E102K	[USA-02]	T	47.3/67.4
	4030017460	S.CER ECJ0EB1E102K	[USA-01]		
	4030017460	S.CER ECJ0EB1E102K	[CHN-01]		
	4030017460	S.CER ECJ0EB1E102K	[USA-11]		
	4030017460	S.CER ECJ0EB1E102K	[USA-12]		
C320	4030017580	S.CER ECJ0EC1H060C		B	15/52.7
C321	4030017460	S.CER ECJ0EB1E102K		B	14.9/49.5
C322	4030017600	S.CER ECJ0EC1H080C		B	19.3/52
C323	4030017570	S.CER ECJ0EC1H040B		B	20/49.6
C324	4030017420	S.CER ECJ0EC1H470J		B	90/41.8
C325	4030017460	S.CER ECJ0EB1E102K		T	72.5/64.9
C326	4030017420	S.CER ECJ0EC1H470J		B	46.2/64.3
C327	4030017460	S.CER ECJ0EB1E102K		B	84.2/79
C328	4030017460	S.CER ECJ0EB1E102K		B	83.2/79
C329	4030017460	S.CER ECJ0EB1E102K		B	82.1/79
C330	4030017460	S.CER ECJ0EB1E102K		B	81/79
C331	4030017460	S.CER ECJ0EB1E102K		B	80/79
C332	4030016930	S.CER ECJ0EB1A104K		T	51.9/71.9
C334	4030017460	S.CER ECJ0EB1E102K		T	49.5/68.6
C335	4030017460	S.CER ECJ0EB1E102K		T	53.8/63.2
C336	4030017580	S.CER ECJ0EC1H060C		B	20.8/52
C337	4030017390	S.CER ECJ0EC1H180J		B	25.1/51.2
C338	4510008600	S.ELE EEE1CA4R7NR		T	79.1/69.1
C339	4030017460	S.CER ECJ0EB1E102K		T	79.1/62.1
C340	4030017460	S.CER ECJ0EB1E102K		T	37.5/20.8
C341	4030016790	S.CER ECJ0EB1C103K		T	41.9/19.4
C342	4030017200	S.CER GRM31BR32J102KY01L		T	25.3/62.5
C343	4030011270	S.CER GRM31M2C2H200JV01L			
		(GRM42-6 CH)		T	22.1/63.9
C345	4030011170	S.CER GRM31M2C2H180JV01L			
		(GRM42-6 CH)		T	17.3/57.4
C346	4030011170	S.CER GRM31M2C2H180JV01L			
		(GRM42-6 CH)		T	30.2/62.8
C347	4030017520	S.CER ECJ0EC1H0R3B		B	25.4/63
C348	4030017460	S.CER ECJ0EB1E102K		B	31.5/63.4
C349	4030016930	S.CER ECJ0EB1A104K		T	100.5/63.5
C350	4550005980	S.TAN TEESVA 1A 475M8R		T	101.6/62
C351	4030016930	S.CER ECJ0EB1A104K		T	110.6/67.4
C352	4030017460	S.CER ECJ0EB1E102K		B	124.6/59.6
C353	4550005980	S.TAN TEESVA 1A 475M8R		B	124.5/61.3
C354	4550006250	S.TAN TEESVA 1A 106M8R		B	112.9/61.7
C355	4030017420	S.CER ECJ0EC1H470J		B	112.6/60.1
C356	4030011270	S.CER GRM31M2C2H200JV01L			
		(GRM42-6 CH)		T	14.7/62.9
C357	4030011270	S.CER GRM31M2C2H200JV01L			
		(GRM42-6 CH)		T	10.4/62.9
C358	4030007030	S.CER C1608 CH 1H 150J-T		B	10.6/56.4
C359	4030011340	S.CER C1608 CH 1H 471J-T		B	9.4/56.4
C360	4030017460	S.CER ECJ0EB1E102K		B	4/53
C361	4030017460	S.CER ECJ0EB1E102K		T	103.9/53.5
C362	4030017460	S.CER ECJ0EB1E102K		T	108.2/24.5
C363	4510008540	S.ELE EEE1CA100SR		T	139.1/31.9

M.=Mounted side (T: Mounted on the Top side, B: Mounted on the Bottom side)
S.=Surface mount

[MAIN-A UNIT] (MDC compatible)

REF NO.	PARTS NO.	DESCRIPTION		M.	H/V LOCATION
C365	4550007650	S.TAN	F931V105MAABMA	B	106.7/65
C366	4550007650	S.TAN	F931V105MAABMA	B	104.2/65
C367	4550007650	S.TAN	F931V105MAABMA	B	101.6/65
C368	4550007650	S.TAN	F931V105MAABMA	B	99.5/64.6
C369	4030011270	S.CER	GRM31M2C2H200JV01L (GRM42-6 CH)	T	15.8/78.9
C370	4030011270	S.CER	GRM31M2C2H200JV01L (GRM42-6 CH)	T	15.8/83.1
C371	4030017460	S.CER	ECJ0EB1E102K	B	4.1/81.6
C372	4030006850	S.CER	C1608 JB 1H 471K-T	B	8.3/77.1
C373	4030016930	S.CER	ECJ0EB1A104K	B	130.9/51.7
C374	4030016930	S.CER	ECJ0EB1A104K	B	133/51.3
C375	4030016930	S.CER	ECJ0EB1A104K	B	132.4/54.6
C377	4030017460	S.CER	ECJ0EB1E102K	T	105.9/51.9
C378	4030017460	S.CER	ECJ0EB1E102K	T	108.2/78
C379	4030016930	S.CER	ECJ0EB1A104K	B	108.4/80.3
C380	4030017460	S.CER	ECJ0EB1E102K	T	119.9/83.2
C381	4030016790	S.CER	ECJ0EB1C103K	B	135.9/70.5
C383	4030017460	S.CER	ECJ0EB1E102K	B	135.9/71.5
C384	4510008870	S.ELE	EEE1AA471UP	T	129.9/64.9
C386	4030016930	S.CER	ECJ0EB1A104K	B	138.8/53.7
C387	4030017720	S.CER	ECJ0EB1H331K	B	135.4/51.3
C388	4030018860	S.CER	ECJ0EB0J105K	B	138.6/52.2
C389	4030016930	S.CER	ECJ0EB1A104K	B	139.1/49.4
C390	4030016930	S.CER	ECJ0EB1A104K	B	137.8/55.4
C391	4030016930	S.CER	ECJ0EB1A104K	T	101.8/82.3
C392	4030017460	S.CER	ECJ0EB1E102K	B	131/74.6
C393	4030017460	S.CER	ECJ0EB1E102K	B	99/79
C394	4030017420	S.CER	ECJ0EC1H470J	B	115.4/68
C395	4030017460	S.CER	ECJ0EB1E102K	B	128.2/76.5
C397	4030017460	S.CER	ECJ0EB1E102K	B	99.8/86.3
C398	4030017420	S.CER	ECJ0EC1H470J	B	100.8/86.3
C399	4030018860	S.CER	ECJ0EB0J105K	B	136.3/37.1
C400	4030016930	S.CER	ECJ0EB1A104K	B	139.7/35.3
C411	4510008780	S.ELE	EEE1EA471P	T	117.2/63.6
C412	4510008780	S.ELE	EEE1EA471P	T	132.7/54.3
C413	4030018900	S.CER	ECJ0EB0J474K	B	135.1/46.8
C414	4510008540	S.ELE	EEE1CA100SR	T	118.7/50.5
C415	4030016930	S.CER	ECJ0EB1A104K	B	103/23.8
C416	4030016930	S.CER	ECJ0EB1A104K	B	120.3/51.6
C417	4030016790	S.CER	ECJ0EB1C103K	B	115.6/52.8
C418	4030017460	S.CER	ECJ0EB1E102K	T	109.6/54.5
C419	4030016790	S.CER	ECJ0EB1C103K	T	42.9/39.2
C420	4030017420	S.CER	ECJ0EC1H470J	T	41/37.4
C421	4030016930	S.CER	ECJ0EB1A104K	B	36/24.7
C422	4030016790	S.CER	ECJ0EB1C103K	T	43.1/31.9
C423	4030017420	S.CER	ECJ0EC1H470J	T	39.9/35.3
C424	4030016930	S.CER	ECJ0EB1A104K	T	38.9/32.2
C425	4030017460	S.CER	ECJ0EB1E102K	B	134.8/66.1
C426	4030018860	S.CER	ECJ0EB0J105K	B	110/12.1
C427	4030017460	S.CER	ECJ0EB1E102K	B	109.1/10.4
C430	4030017570	S.CER	ECJ0EC1H040B	T	78.2/44.8
C431	4030017590	S.CER	ECJ0EC1H070C	T	23/21.9
C432	4030016930	S.CER	ECJ0EB1A104K	T	22.4/10.5
C433	4030016930	S.CER	ECJ0EB1A104K	B	23/7.3
C434	4030017650	S.CER	ECJ0EC1H270J	B	28.3/5.6
C435	4030017040	S.CER	ECJ0EB1A333K	B	29.2/7.3
C436	4030016930	S.CER	ECJ0EB1A104K	B	21.2/5.6
C437	4030016930	S.CER	ECJ0EB1A104K	B	27.6/8.7
C438	4030016930	S.CER	ECJ0EB1A104K	B	31.6/5.7
C440	4030016930	S.CER	ECJ0EB1A104K	B	22.1/8.9
C441	4030017610	S.CER	ECJ0EC1H090C	B	25.9/39.5
C451	4030018860	S.CER	ECJ0EB0J105K	B	93.8/6.5
C452	4030019120	S.CER	GRM188B31E105KA75D	B	129.7/64.1
C453	4030016930	S.CER	ECJ0EB1A104K	B	132.4/56.3
J1	6510026770	S.CON	AXK540147YG	T	124.5/9.7
J2	6510026770	S.CON	AXK540147YG	T	101.5/9.7
J3	6510021301	S.CON	52365-1071	T	90.3/62.6
J5	6510023092	S.CON	20FLT-SM2-TB(LF)(SN)(M)	T	108.3/81.8
J7	6450000140	CON	HSJ0807-01-010		
J10	6510023092	S.CON	20FLT-SM2-TB(LF)(SN)(M)	T	71/7
W1	7030012290	JUM	RDS2T0R0		
W2	8900016250	CAB	OPC-1701 <CMI>		
EP1	6910015600	S.BEA	ACZ1005Y-241 (240)	B	39.8/8.1
EP2	6910015370	S.BEA	ACZ1005Y-102-T	B	50.1/12.4
EP3	6910015370	S.BEA	ACZ1005Y-102-T	T	82.6/37.1
EP4	6910010280	BEA	HF70BB9.5X10.4X4.9		
EP5	6910010280	BEA	HF70BB9.5X10.4X4.9		
EP6	6910011560	BEA	HF70BB4.5X5X1.6		
EP8	0880002600	UNI	EX-2887 #13 UT-126H [USA-01]		
	0880002600	UNI	EX-2887 #13 UT-126H [EUR-03]		
	0880002600	UNI	EX-2887 #13 UT-126H [CHN-01]		
	0880002600	UNI	EX-2887 #13 UT-126H [USA-11]		
	0880002600	UNI	EX-2887 #13 UT-126H [USA-12]		

M.=Mounted side (T: Mounted on the Top side, B: Mounted on the Bottom side)
S.=Surface mount

BOARD LAYOUTS

The combination of this side and the bottom side shows the board layout in the same configuration as the actual P.C.Board.

• MDC compatible

• CONNECT UNIT (TOP VIEW)

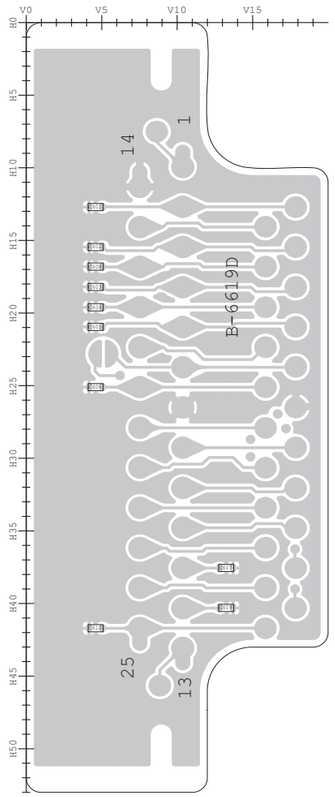

• FRONT UNIT (TOP VIEW)

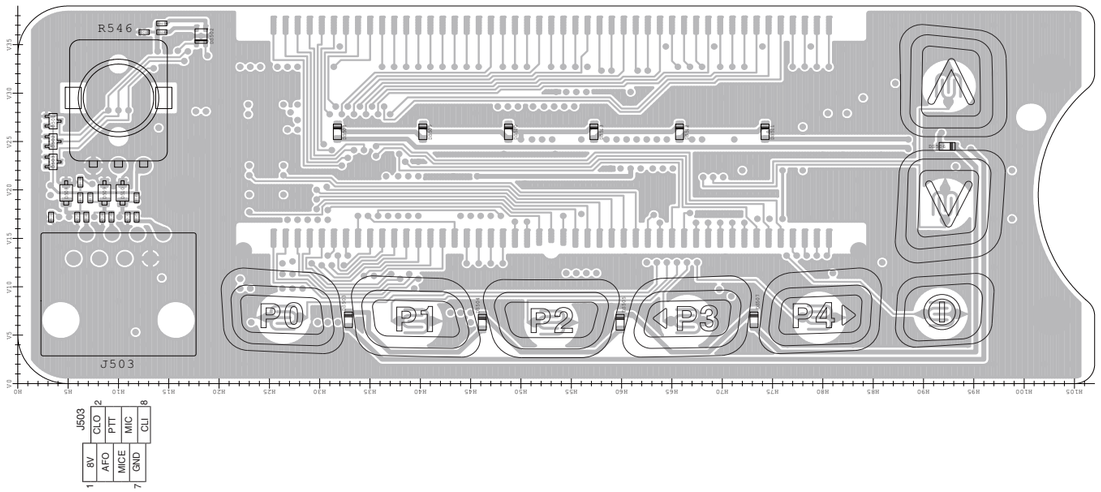

J503			
1	8V	CLO	2
	AFO	PTT	
	MICE	MIC	
7	GND	CLI	8

• MAIN-A UNIT (TOP VIEW)

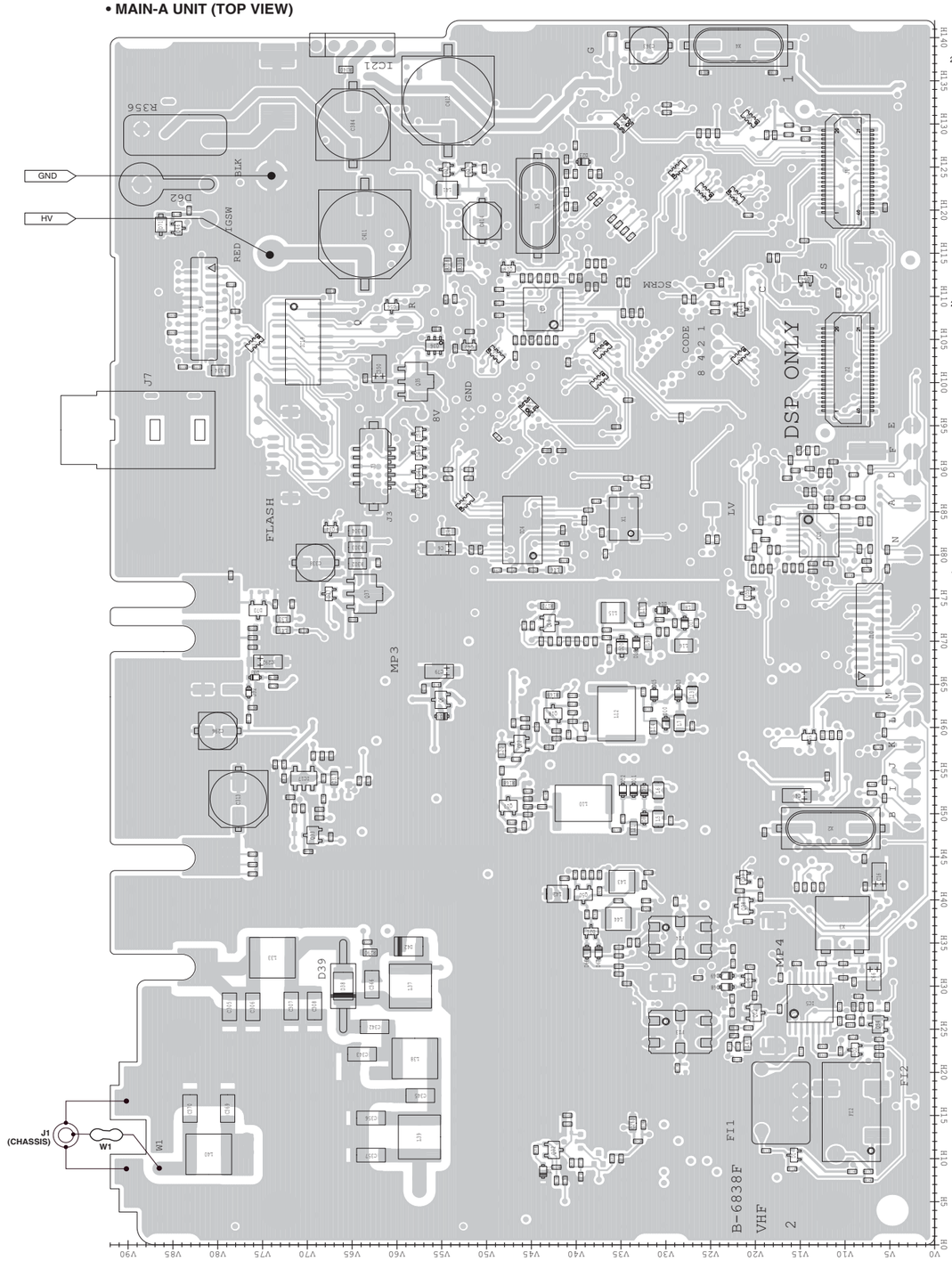

J1			
20	DASW	NC	21
	PFMF	CCK	
	EMPH	CSI	
	GND	CSO	
	OPT3	NC	
	OPT2	CIRQ	
	OPT1	CCS	
	SIGO	REM	
	BUSY	NC	
	NC	AFOUT	
	NC	DISC	
	NC	RMUT	
	NC	BEPO	
	MCIN	AFON	
	NC	MMUTI	
	MCOT	NC	
	PTTO	VCC	
	PTTI	+5V	
	GND	GND	
1	NC	NC	40

J2			
20	GND	GND	21
	GND	CCK	
	NC	CSI	
	GND	CSO	
	OPT3	NC	
	OPT2	CIRQ	
	OPT1	CCS	
	NC	NC	
	NC	DAFO	
	NC	NC	
	VREF	DISC	
	NC	NC	
	DMI	NC	
	NC	NC	
	DMO	NC	
	NC	NC	
	NC	8V	
	NC	+5V	
	GND	GND	
1	D_IF	D_IF	40

J10			
		VCC	20
19	VCC	NC	
	GND	8V	
	MFDA	FMDA	
	POSW	MICE	
	MCIN	MICE	
	AFO	NC	
	SP-	SP-	
	NC	SP+	
	SP+	GND	2
1	GND		

• MDC compatible

The combination of this side and the bottom side shows the board layout in the same configuration as the actual P.C.Board.

• MAIN-A UNIT (BOTTOM VIEW)

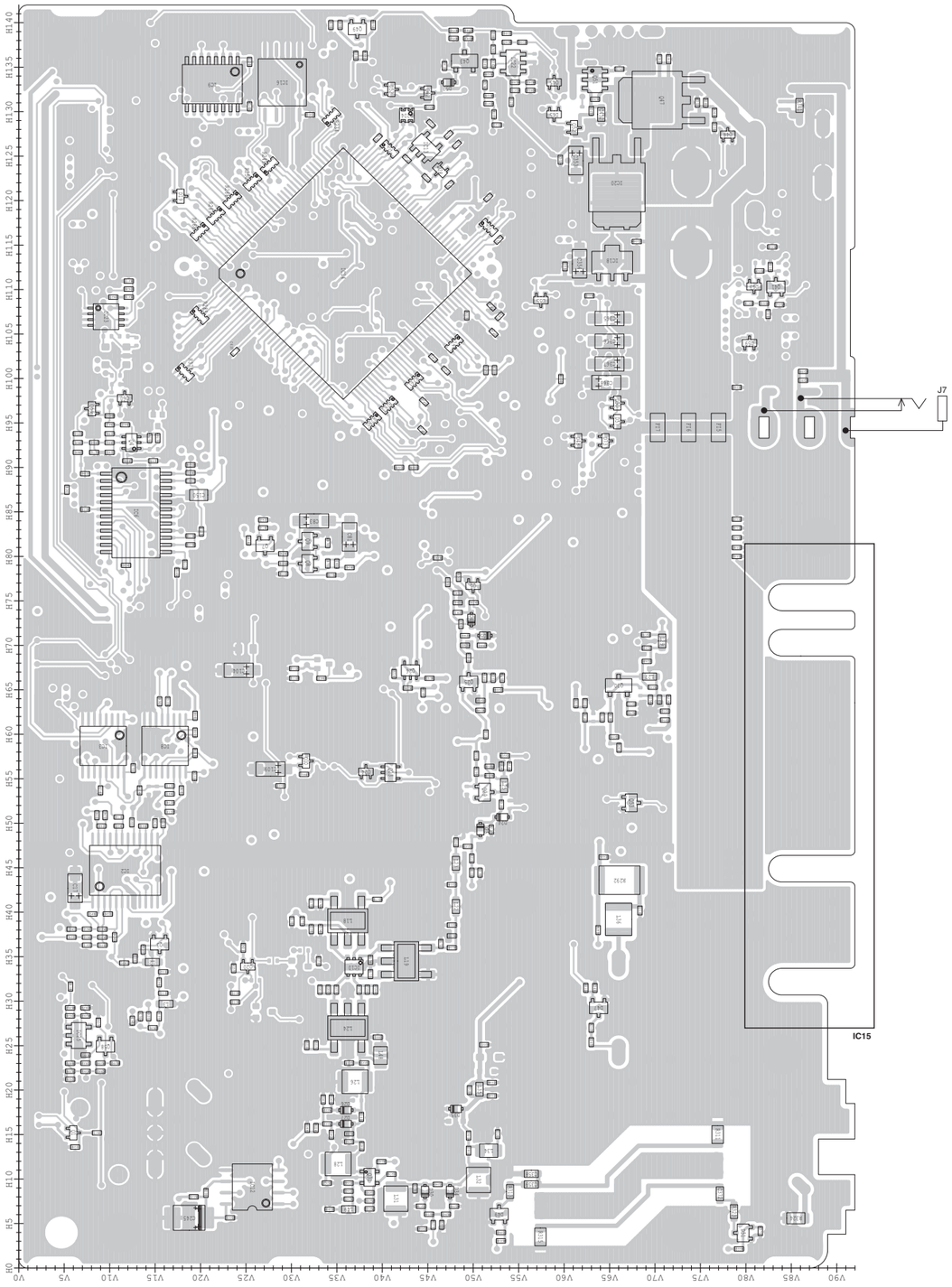

• CONNECT UNIT (BOTTOM VIEW)

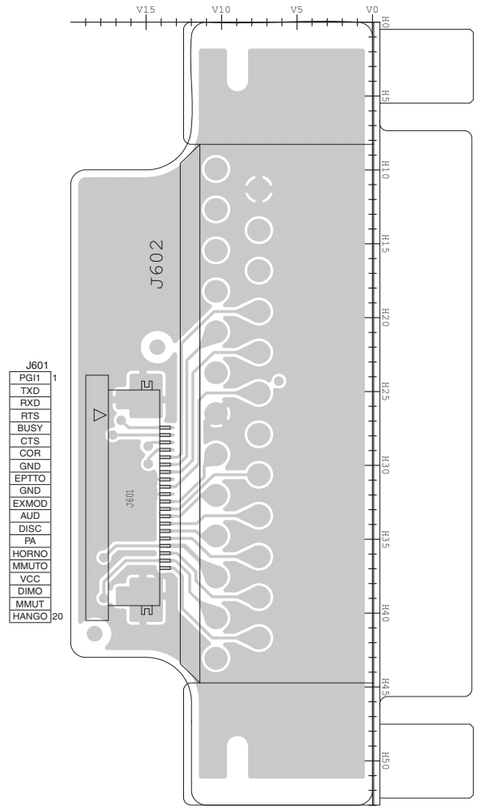

• FRONT UNIT (BOTTOM VIEW)

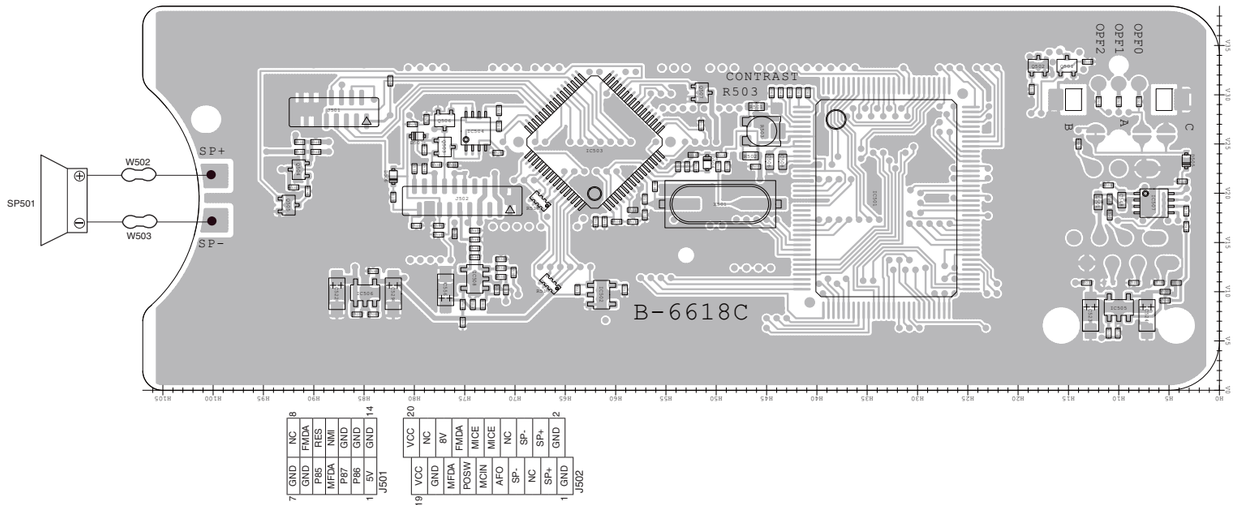

VOLTAGE DIAGRAM

• **Other than "MDC compatible"**

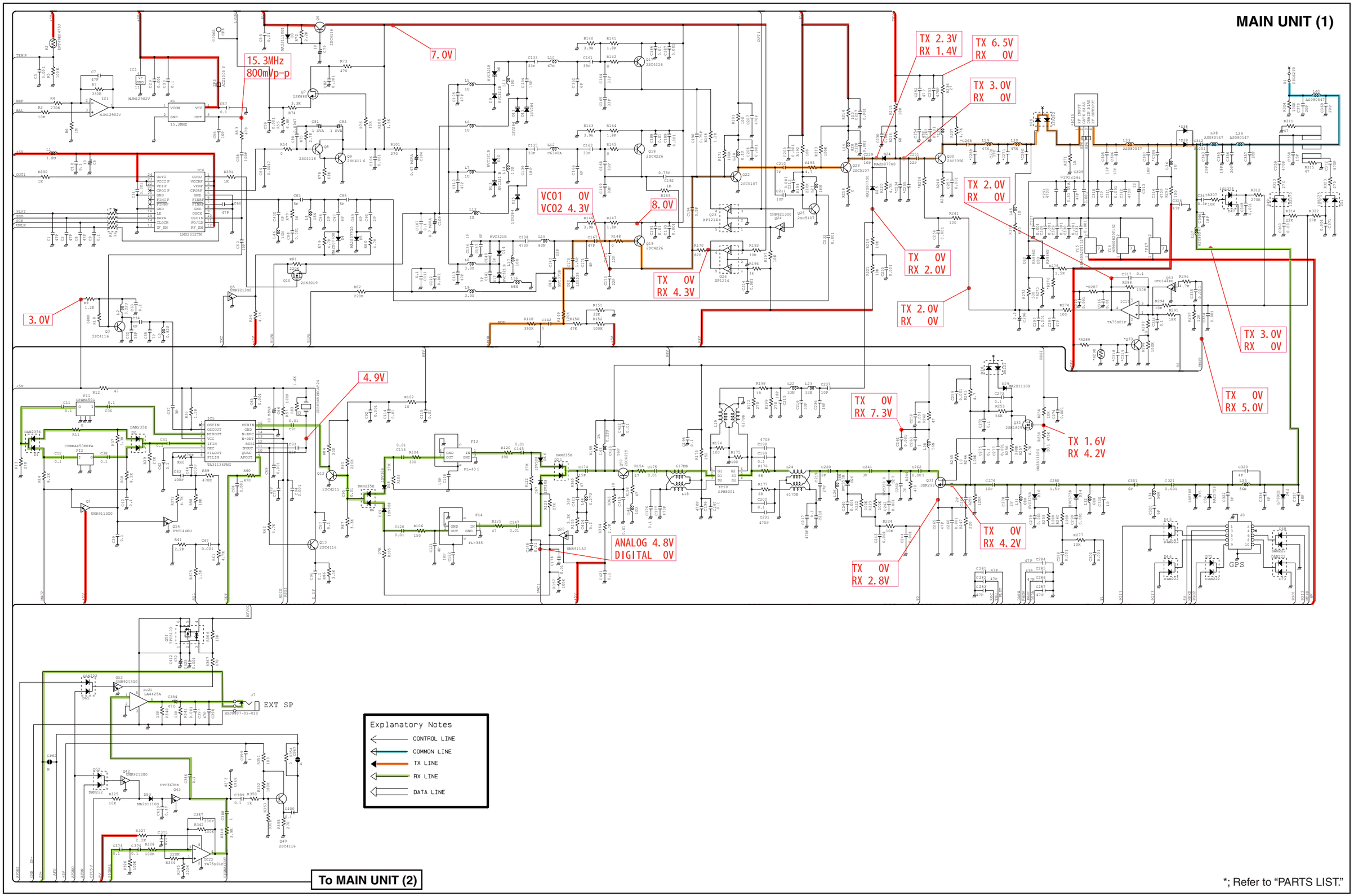

*; Refer to "PARTS LIST."

• Other than "MDC compatible"

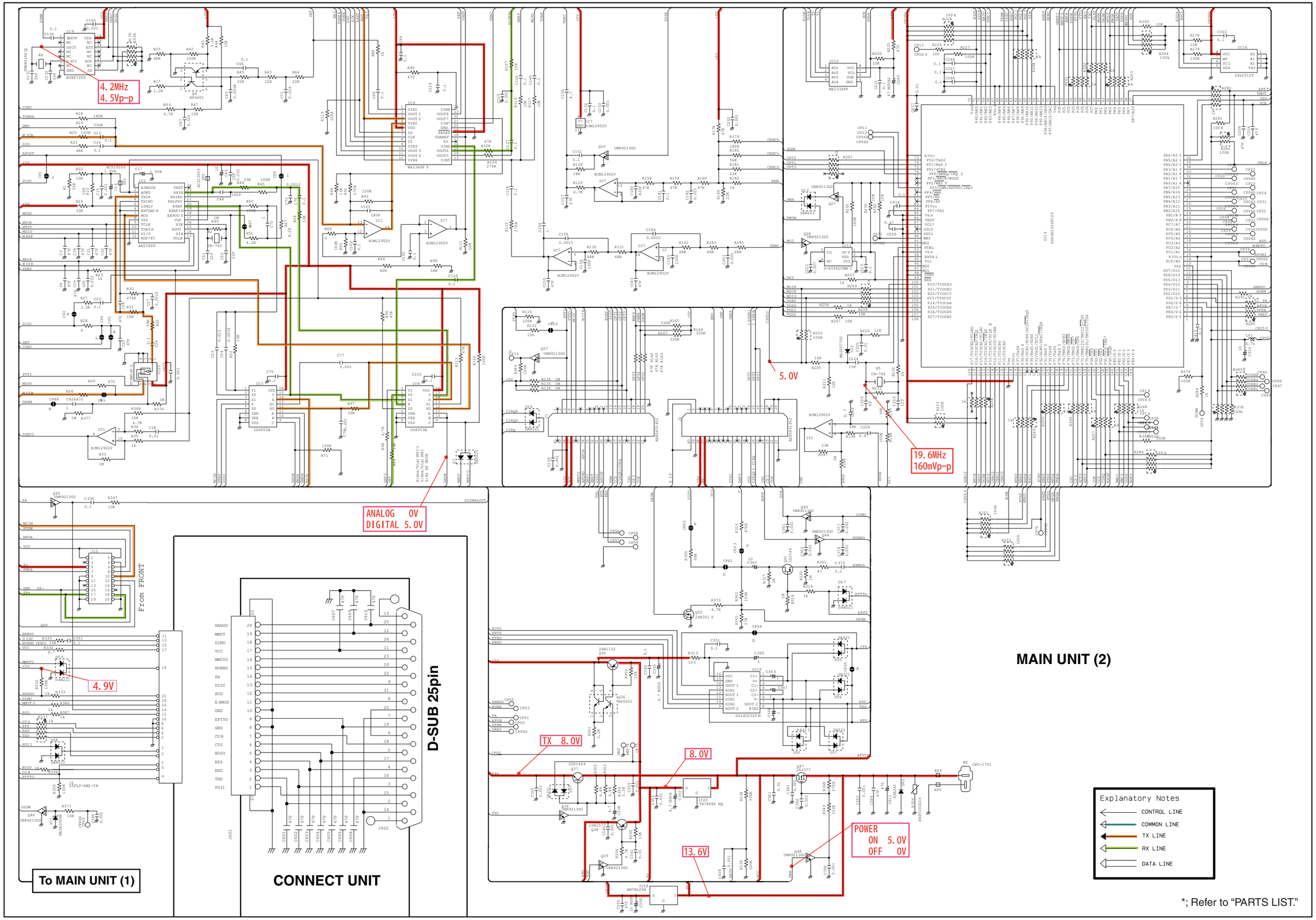

*; Refer to "PARTS LIST."

• **MDC compatible**

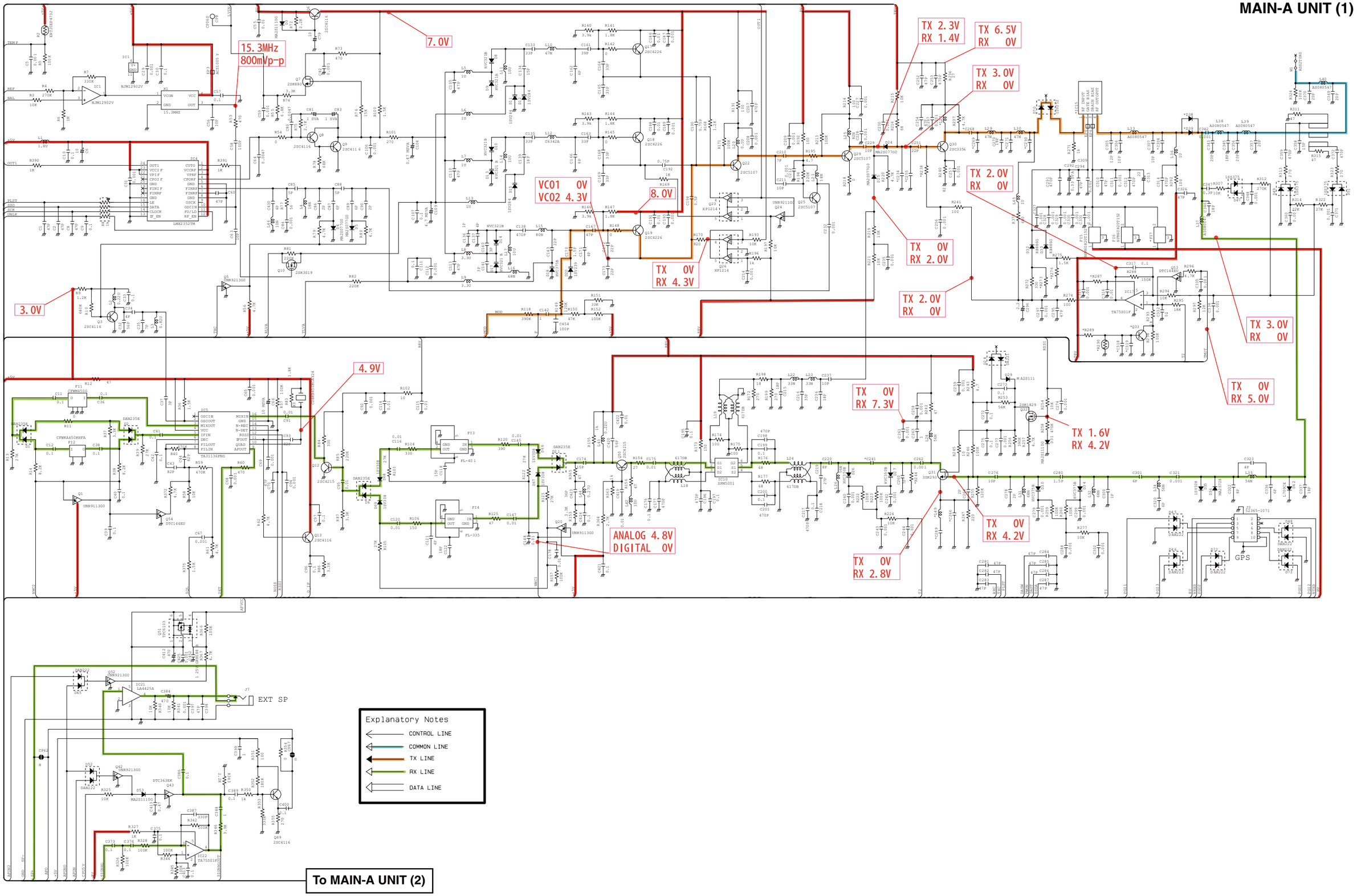

• **MDC compatible**

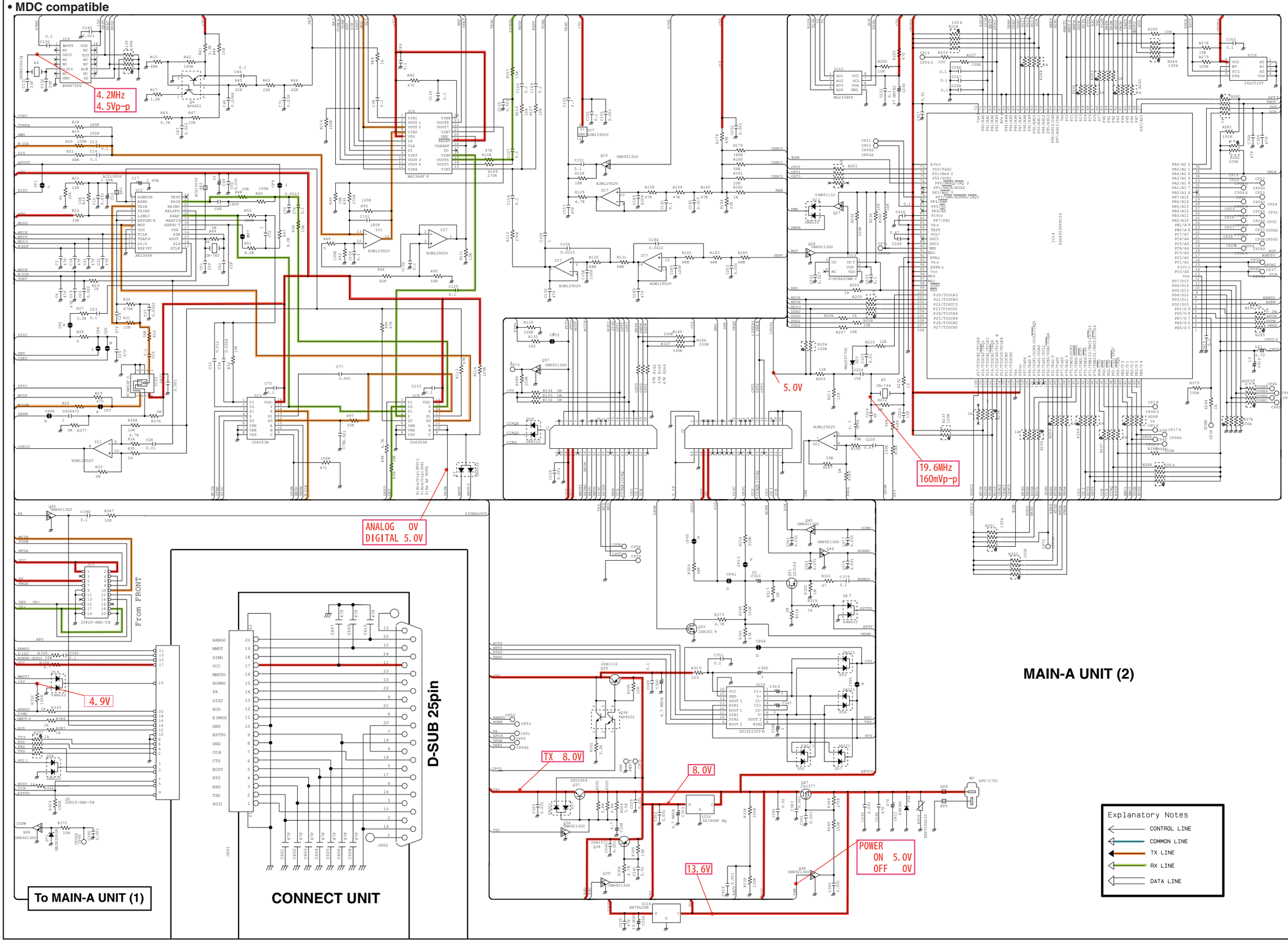

Aug. 2009

SERVICE MANUAL ADDENDUM

IC-F5061 IC-F5062 IC-F5063 IC-F5061D IC-F5062D

CONTENTS

REPLACEMENT PAGE. . . . . 6-1, 6-2 and 6-5
PARTS LIST 1
VOLTAGE DIAGRAM 14

MODEL	VERSION	CHANNEL SPACING	TX POWER	MDC	UT-126H preinstalled
IC-F5061	USA-01	15.0/30.0 kHz	50 W	Not compatible	No
	USA-02			Compatible	
IC-F5062	EUR-01	12.5/25.0 kHz	25 W	Not compatible	
	EUR-02			Compatible	
IC-F5063	EXP-01	12.5/20/25.0 kHz		Not compatible	
	EXP-02			Compatible	
IC-F5061D	USA-01	6.25/15.0/30.0 kHz	50 W	Compatible	Yes
	USA-11				
	USA-12				
	CHN-01				
IC-F5062D	EUR-03	6.5/12.5/20/25 kHz	25W	Not compatible	

SECTION 6 ADJUSTMENT PROCEDURES

6-1 PREPARATION

When adjusting IC-F5060 series transceiver, CS-F5060 CLONING SOFTWARE, CS-F5060 ADJ ADJUSTMENT SOFTWARE (Rev. 1.0 or later), RS-232C cable, JIG cable (modified OPC-1122/U CLONING CABLE; see the page 6-2) and the following test equipments are required.

EQUIPMENT	GRADE AND RANGE	EQUIPMENT	GRADE AND RANGE
DC power supply	Output voltage : 13.6 V DC [USA], [CHN] 13.2 V DC [EUR], [EXP] Current capacity : More than 1.5 A	Attenuator	Power attenuation : 50 or 60 dB Capacity : 60 W [USA], [CHN] 30 W [EUR], [EXP]
modulation analyzer	Frequency range : DC–300 MHz Measuring range : 0 to ±10 kHz	External speaker	Input impedance : 4 Ω Capacity : 5 W or more
Frequency counter	Frequency range : 0.1–300 MHz Frequency accuracy : ±1 ppm or better Sensitivity : 100 mV or better	Standard signal generator (SSG)	Frequency range : 0.1–300 MHz Output level : 0.1 µV to 32 mV (–127 to –17 dBm)
RF power meter	Measuring range : 0.1–60 W [USA], [CHN] 0.1–30 W [EUR], [EXP] Frequency range : 100–300 MHz Impedance : 50 Ω SWR : Better than 1.2 : 1	Oscilloscope	Frequency rang : DC–20 MHz Measuring range : 0.01–20 V
		Digital voltmeter	Input impedance : 50 kΩ Measuring range : 0.1–10V

■ SYSTEM REQUIREMENTS (for the ADJUSTMENT SOFTWARE)

• Microsoft® Windows® 98/98SE/Me/2000/XP • RS-232C serial port (D-sub 9 pin)

■ ADJUSTMENT SOFTWARE INSTALLATION

① Quit all applications when Windows is running.
② Insert the CD into the appropriate CD drive.
③ Double-click the “Setup.exe” contained in the ‘CS-F5060 ADJ’ folder in the CD drive.
④ The “Welcome to the InstallShield Wizard for CS-F5060 ADJ” will appear. Click [Next>].
⑤ The “Choose Destination Location” will appear. Then click [Next>] to install the software to the destination folder. (e.g. C:\Program Files\Icom\CS-F5060 ADJ)
⑥ After the installation is completed, the “InstallShield Wizard Complete” will appear. Then click [Finish].
⑦ Eject the CD.
⑧ Program group ‘CS-F5060 ADJ’ appears in the ‘Programs’ folder of the start menu, and ‘CS-F5060 ADJ’ icon appears on the desk top screen.

■ STARTING SOFTWARE ADJUSTMENT

① Connect the transceiver and PC with RS-232C cable and JIG CABLE.
② Turn the transceiver power ON.
③ Boot up Windows, and click the program group ‘CS-F5060 ADJ’ in the ‘Programs’ folder of the [Start] menu, then CS-F5060 ADJ’s window appears.
④ Click ‘Connect’ on the CS-F5060 ADJ’s window, then the window shows transceiver’s condition and adjustment items as below.
⑤ Set or modify adjustment data as specified.

Microsoft and Windows are registered trademarks of Microsoft Corporation in the U.S.A. and other countries.

■ BEFORE STARTING SOFTWARE ADJUSTMENT

Clone the adjustment frequencies and settings into the transceiver, and set the configuration using the CS-F5060 CLONING SOFTWARE before starting the software adjustment. Otherwise, the software adjustment can not be started.

CAUTION!: BACK UP the originally programmed memory data in the transceiver before programming the adjustment frequencies. When program the adjustment frequencies into the transceiver, the transceiver’s memory data will be overwritten and lose original memory data at the same time.

• ADJUSTMENT FREQUENCY LIST

CH	FREQUENCY	SETTING	CH	FREQUENCY	SETTING
1	154.900 MHz	• TX power : Low1 • Mode : Narrow	10	174.000 MHz	• TX power : Low1 • Mode : Narrow
2	174.000 MHz	• TX power : Low1 • Mode : Wide	11*	155.000 MHz	• TX power : Low1 • Mode : Middle
3	136.000 MHz	• TX power : Low1 • Mode : Wide	12*	136.000 MHz	• TX power : High • Mode : Middle
4	155.000 MHz	• TX power : Low1 • Mode : Wide	13*	174.000 MHz	• TX power : Low2 • Mode : Middle
5	136.000 MHz	• TX power : High • Mode : Narrow	14	155.000 MHz	• TX power : Low1 • Mode : Digital
6	136.000 MHz	• TX power : Low2 • Mode : Wide	15	136.000 MHz	• TX power : Low1 • Mode : Digital
7	155.000 MHz	• TX power : Low1 • Mode : Middle • DTCS : 007	16	174.000 MHz	• TX power : Low1 • Mode : Digital
8	155.000 MHz	• TX power : Low1 • Mode : Narrow	17	136.000 MHz	• TX power : Low1 • CTCSS : 151.4 Hz
9	136.000 MHz	• TX power : Low1 • Mode : Narrow	18	136.000 MHz	• TX power : Low1 • Mode : Wide • DTMF : P3

*; [EUR] only

• **CONNECTION**

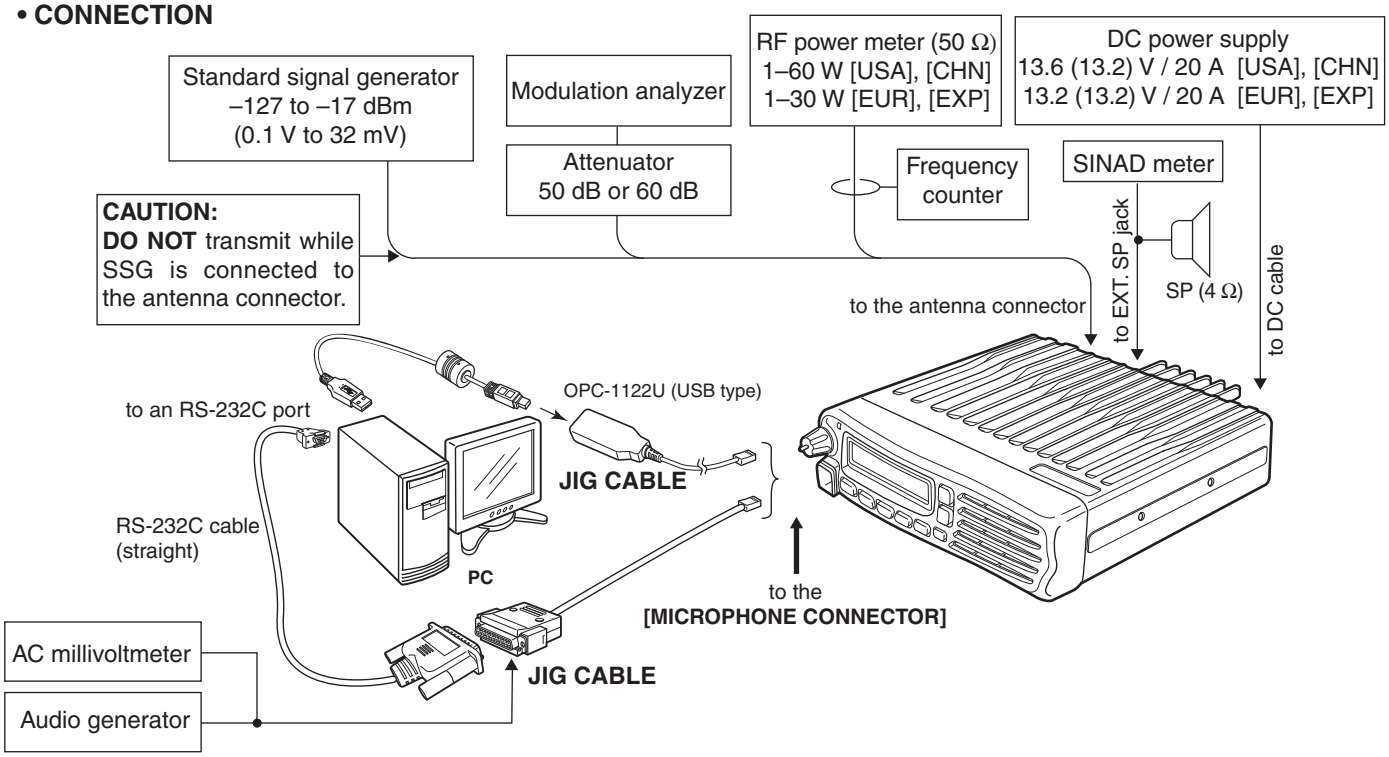

• **JIG CABLE**

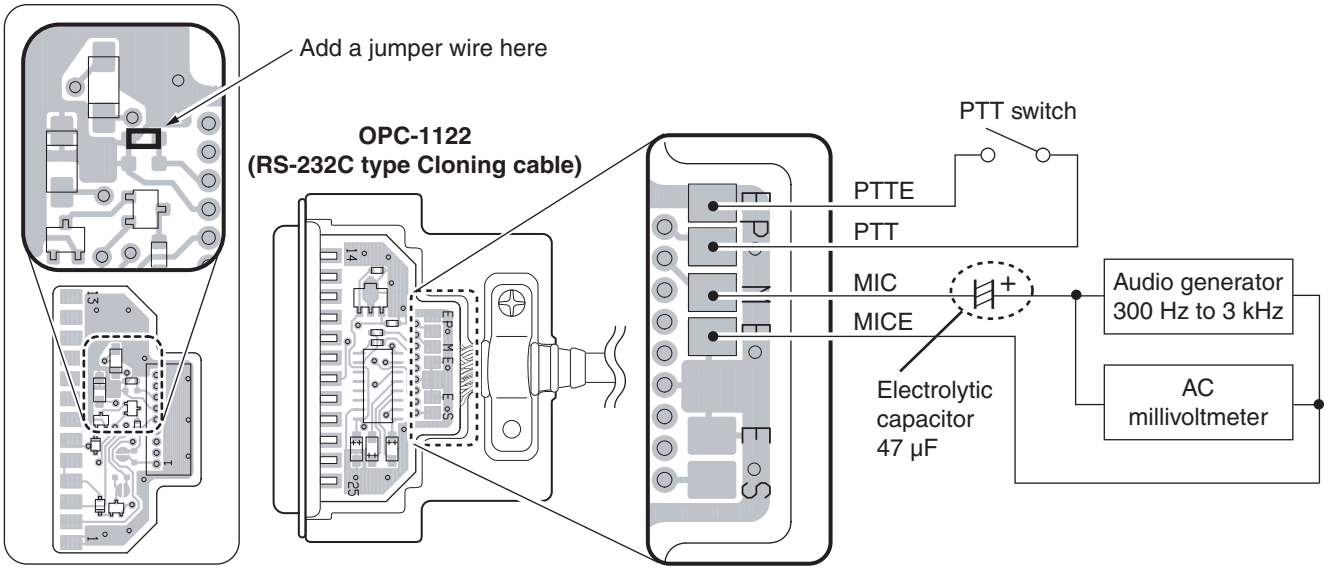

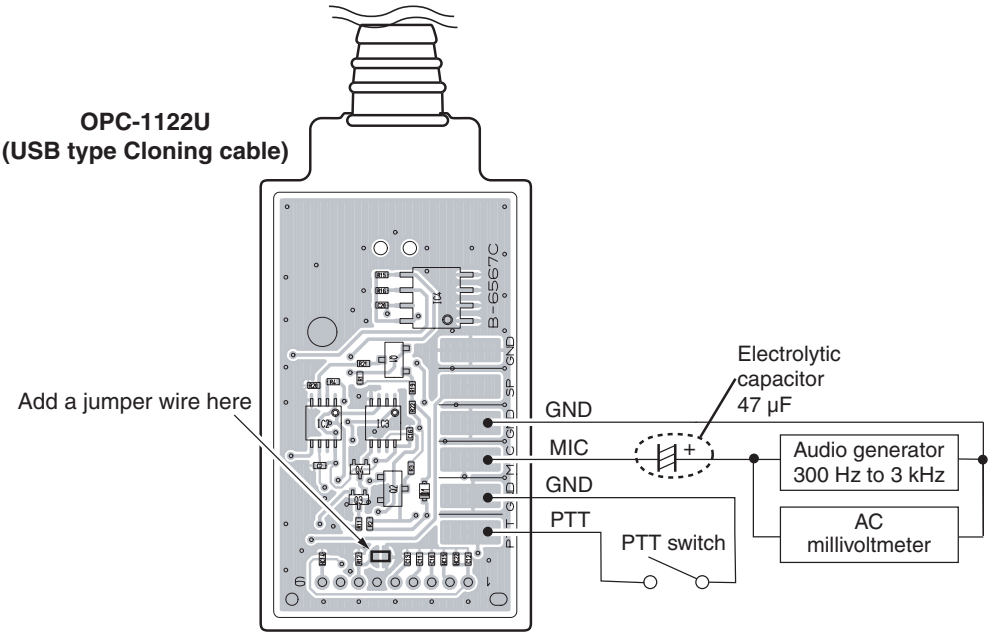

6-3 TRANSMIT ADJUSTMENT

Select an adjustment item using [↑] / [↓] keys, then set to the specified value using [←] / [→] keys on the connected PC's keyboard.

ADJUSTMENT		ADJUSTMENT CONDITION	UNIT	OPERATION	VALUE
OUTPUT POWER [Power (Hi)]	1	• Channel : CH 5 • Transmitting	Rear panel	Connect an RF power meter to the antenna connector.	50 W [USA], [CHN] 25 W [EUR], [EXP]
[Power (L2)]	2	• Channel : CH 6 • Transmitting			25 W [USA], [CHN] 10 W [EUR], [EXP]
[Power (L1)]	3	• Channel : CH 3 • Transmitting			5.0 W [USA], [CHN] 2.5 W [EUR], [EXP]
MODULATION BALANCE [BAL (Narrow)]	1	Set the preset value of [MOD N] to "100" on the adjustment software.			
	2	• Channel : CH 7 • No audio signals applied to the JIG cable. • Set a modulation analyzer as; HPF : OFF LPF : 20 kHz De-emphasis : OFF Detector : (P–P)/2 • Push [P0] while transmitting.	Rear panel	Connect the modulation analyzer with an oscilloscope to the antenna connector through an attenuator.	Set to square wave form Flat
FM DEVIATION (NARROW) [MOD N C]	1	• Connect an audio generator to the JIG cable and set as; Frequency : 1.0 kHz Level : 40 mV rms • Set the modulation analyzer to the same condition as "MODULATION BALANCE." • Transmitting • Channel : CH 8 • Transmitting	Rear panel	Connect the modulation analyzer to the antenna connector through an attenuator.	±2.05 to ±2.15 kHz
[MOD N L]	2	• Channel : CH 9 • Transmitting			
[MOD N H]	3	• Channel : CH 10 • Transmitting			
(WIDE) [MOD W C]	4	• Channel : CH 4 • Transmitting			±4.05 to ±4.15 kHz
[MOD W L]	5	• Channel : CH 3 • Transmitting			
[MOD W H]	6	• Channel : CH 2 • Transmitting			
(MIDDLE)* [MOD W C]	7	• Channel : CH 11 • Transmitting			±3.15 to ±3.25 kHz
[MOD M L]	8	• Channel : CH 12 • Transmitting			
[MOD M H]	9	• Channel : CH 13 • Transmitting			
DIGITAL DAVIATION [MOD D C]	1	Set the preset value of [Digital Mode] to "7" on the adjustment software.			
	2	• Attach the UT-119 or UT-126H to J2. (Refer to page 4-2 for the installation) • Channel : CH 14 • Transmitting	Rear panel	Connect the modulation analyzer to the antenna connector through an attenuator.	±1.41 to ±1.45 kHz
[MOD D L]	3	• Channel : CH 15 • Transmitting			
[MOD D H]	4	• Channel : CH 16 • Transmitting			
CTCSS/DTCS DEVIATION [CTCS/DTCS]	1	• Channel : CH 17 • No audio signals applied to the JIG cable. • Set the modulation analyzer to the same condition as "MODULATION BALANCE." • Transmitting	Rear panel	Connect a modulation analyzer to the antenna connector through an attenuator.	±0.68 to ±0.72 kHz
2TONE, 5TONE, DTMF [S.Tone]	1	• Channel : CH 18 • Transmitting	Rear panel	Connect a modulation analyzer to the antenna connector through an attenuator.	±1.50 kHz

*; [EUR] only.

PARTS LIST

[VERSION LIST]

MODEL	VERSION	SYMBOL
IC-F5061	USA-01	[A]
	USA-02	[B]
IC-F5062	EUR-01	[C]
	EUR-02	[D]
IC-F5063	EXP-01	[E]
	EXP-02	[F]
IC-F5061D	USA-01	[G]
	USA-11	[H]
	USA-12	[I]
	CHN-01	[K]
IC-F5062D	EUR-03	[J]

[MAIN UNIT] (Other than "MDC compatible")

REF NO.	PARTS NO.	DESCRIPTION		M.	H/V LOCATION
IC1	1110005340	S.IC NJM12902V-TE1-#ZZZB		T	82.3/12.9
IC2	1110006221	S.IC AK2346P-E2/P		B	44.7/11.7
IC3	1140013200	S.IC CD4053BPWR		B	58.7/9.3
IC4	1130010100	S.IC LMX2352TMX/NOPB		T	82.9/46
IC5	1110003491	S.IC TA31136FNG(D,EL)		T	28/13.9
IC6	1190001350	S.IC M62364FP 600D		B	84.9/12.9
IC7	1110005340	S.IC NJM12902V-TE1-#ZZZB		T	108.5/43.7
IC8	1140013200	S.IC CD4053BPWR		B	58.7/16.1
IC9	1130012960	S.IC BU8872FS-E2		B	133.1/21.3
IC10	1190002051	S.IC SPM5001-TL-E		B	33.8/36.9
IC12	1190001340	S.IC M62334FP 600C		B	9.1/25.7
IC13	1110005771	S.IC S-80942CNMC-G9CT2G		B	126/44.8
IC14	1140014550	S.IC HD64F2506RFC26DV(EMPTY)		B	111.8/35.7
IC15	1150002073	IC RA60H1317M-125	[A]		
	1150002042	IC RA30H1317M-121	[E]		
	1150002042	IC RA30H1317M-121	[C]		
IC16	1140012950	S.IC 24LC512T-I/SM		B	133.3/29
IC17	1110002751	S.IC TA75S01F(TE85R,F)		T	54.1/70.4
IC18	1180000970	S.IC AN78L05M-(E1)		B	113/65.3
IC19	1120002510	S.IC DS14C232TM S		T	104.7/70.5
IC20	1180001251	S.IC TA7808F(TE16L,Q)		B	121.5/65.8
IC21	1110003091	IC LA4425A-E			
IC22	1110002751	S.IC TA75S01F(TE85R,F)		B	135.5/54.4
IC23	1130006221	S.IC TC4W53FU(TE12L,F)		B	106.9/9.6
Q1	1590003231	S.TRA UNR9113G0L		B	15.2/6
Q3	1530002851	S.TRA 2SC4116-BL(TE85R,F)		B	36.4/15.5
Q4	1590001650	S.TRA XP4601(TX)		B	92.8/12.4
Q5	1590003291	S.TRA UNR9213G0L		B	76.7/50
Q6	1530002851	S.TRA 2SC4116-BL(TE85R,F)		T	63.2/55.1
Q7	1560000541	S.FET 2SK880-Y(T5RICOM,F)		B	81.2/27.1
Q8	1530002851	S.TRA 2SC4116-BL(TE85R,F)		B	79.2/31.8
Q9	1530002851	S.TRA 2SC4116-BL(TE85R,F)		B	81.7/31.8
Q10	1560001360	S.FET 2SK3019 TL		B	57/31.6
Q12	1530002601	S.TRA 2SC4215-O(TE85R,F)		T	26.9/20
Q13	1530002851	S.TRA 2SC4116-BL(TE85R,F)		B	31.8/9.9
Q16	1590003291	S.TRA UNR9213G0L		T	113.2/47.6
Q17	1530002920	S.TRA 2SC4226-T1 R25		T	50.9/47.6
Q18	1530002920	S.TRA 2SC4226-T1 R25		T	61.6/42.6
Q19	1530002920	S.TRA 2SC4226-T1 R25		T	72.1/43
Q20	1590003231	S.TRA UNR9113G0L		B	33.9/25.2
Q22	1530003311	S.TRA 2SC5107-O(TE85R,F)		T	58.1/46.3
Q23	1590001400	S.TRA XP1214(TX)		B	55.7/40.9
Q24	1590003281	S.TRA UNR9211G0L		B	55.8/38.2
Q25	1530003311	S.TRA 2SC5107-O(TE85R,F)		B	65.9/49.5
Q26	1590001400	S.TRA XP1214(TX)		B	67.2/43.1
Q27	1590003231	S.TRA UNR9113G0L		T	124.7/52
Q28	1590003291	S.TRA UNR9213G0L		B	123.4/46.3
Q29	1530003311	S.TRA 2SC5107-O(TE85R,F)		B	53.5/51.2
Q30	1530000372	S.TRA 2SC3356-T1B R (R24)		B	65.5/66
Q31	1580000731	S.FET 3SK293(TE85L,F)		B	10.2/38.6
Q32	1560000841	S.FET 2SK1829(TE85R,F)		T	11/42.5
Q33	1530002851	S.TRA 2SC4116-BL(TE85R,F)	[A] only	T	47.5/69.4
Q34	1590003291	S.TRA UNR9213G0L		T	83/67.4
Q35	1520000460	S.TRA 2SB1132 T100 R		T	100.1/57.9
Q36	1590001190	S.TRA XP6501-(TX).AB		T	104.3/55.8
Q37	1540000550	S.TRA 2SD1664 T100Q		T	75.5/63.6
Q38	1510000920	S.TRA 2SA1577 T106 Q		T	39.3/21.3
Q39	1590003291	S.TRA UNR9213G0L		T	42.6/21.3
Q40	1590003291	S.TRA UNR9213G0L		T	104.1/51.9
Q41	1590001451	S.FET 2SJ144-GR (TE85R,F)		B	110.3/83.3
Q42	1590003291	S.TRA UNR9213G0L		B	132.1/45
Q43	1590000990	S.TRA DTC363EK T146		B	135.7/49
Q44	1590003291	S.TRA UNR9213G0L		T	108.5/21.6
Q45	1590003291	S.TRA UNR9213G0L		B	133.3/58.9
Q46	1590003291	S.TRA UNR9213G0L		T	117.9/84.4
Q47	1550000100	S.FET 2SJ377 (TE16L1,NQ)		B	131.3/71.5
Q48	1590003291	S.TRA UNR9213G0L		B	124.9/77.7
Q49	1530002851	S.TRA 2SC4116-BL(TE85R,F)		B	139.3/37.2
Q50	1530002601	S.TRA 2SC4215-O(TE85R,F)		T	40.6/39.2
Q51	1590003321	S.FET TPC6103(TE85L,F)		B	133.6/63.4
Q52	1590003291	S.TRA UNR9213G0L		B	128.2/61.1
Q53	1590000430	S.TRA DTC144EUA T106		B	52.3/67.4
Q54	1590000430	S.TRA DTC144EUA T106		T	25.5/6.3
Q55	1560001360	S.FET 2SK3019 TL		T	75.5/20.9
Q57	1590003291	S.TRA UNR9213G0L		T	112/14.4
D1	1750001070	S.DIO DAN235ETL		T	10.4/15.7
D2	1750001070	S.DIO DAN235ETL		T	22.6/8.9
D3	1790001251	S.DIO MA2S1110GL		T	61.3/55
D4	1790001261	S.DIO MA2S077G0L		B	72.9/49.8
D5	1790001261	S.DIO MA2S077G0L		B	71.1/51.3
D6	1750001070	S.DIO DAN235ETL		T	30.6/20.8
D7	1160000140	S.DIO DAP222 TL		T	58.9/14
D8	1720000791	S.VAR HVC321B1TRF-E		T	49.5/32.4
D9	1720000791	S.VAR HVC321B1TRF-E		T	52.7/32.4
D10	1720000791	S.VAR HVC321B1TRF-E		T	60.5/30
D11	1720000641	S.VAR 1SV284(TPH3,F)		T	52.7/33.6
D12	1720000641	S.VAR 1SV284(TPH3,F)		T	52.7/34.8
D13	1720000791	S.VAR HVC321B1TRF-E		T	63.8/28.6
D14	1720000791	S.VAR HVC321B1TRF-E		T	73.6/30.4
D15	1720000641	S.VAR 1SV284(TPH3,F)		T	63.8/31.3
D17	1720000791	S.VAR HVC321B1TRF-E		T	72.1/27.9
D18	1750000721	S.VAR HVC375BTRF-E		T	69.8/33.3
D19	1160000140	S.DIO DAP222 TL		B	120.5/17.8
D20	1720000471	S.VAR 1SV239(TPH3,F)		T	69.4/34.9

M.=Mounted side (T: Mounted on the Top side, B: Mounted on the Bottom side)
S.=Surface mount

[MAIN UNIT] (Other than "MDC compatible")

REF NO.	PARTS NO.	DESCRIPTION	M.	H/V LOCATION
D21	1750001070	S.DIO DAN235ETL	T	36.3/38.3
D22	1750000520	S.DIO DAN222TL	T	124.7/54.5
D23	1790001261	S.DIO MA2S077G0L	T	125.6/39.2
D24	1790001261	S.DIO MA2S077G0L	B	50.7/53.2
D25	1790001261	S.DIO MA2S077G0L	B	49.3/50.8
D26	1750000711	S.VAR HVC350BTRF-E	B	17.7/36
D27	1750000711	S.VAR HVC350BTRF-E	B	16.2/36
D28	1750000370	S.DIO DA221 TL	T	10/37.5
D29	1790001251	S.DIO MA2S1110GL	T	12/39.5
D30	1750000721	S.VAR HVC375BTRF-E	B	8.6/44.7
D31	1790001251	S.DIO MA2S1110GL	T	8.5/43.7
D32	1750001080	S.DIO RB886G T2R	T	64.1/76.5
D33	1750001080	S.DIO RB886G T2R	T	65.8/75.8
D34	1750000721	S.VAR HVC375BTRF-E	B	8.6/47.4
D35	1790001621	S.DIO 1SV308(TPL3,F)	B	17.9/48.1
D36	1790001241	S.DIO MA2S7280GL [E]	B	16.5/48.1
	1790001241	S.DIO MA2S7280GL [C]		
D37	1750000370	S.DIO DA221 TL	T	75.5/67.6
D38	1750000511	S.DIO UX9401F-STD/TR <INT> [E]	T	30/66
	1750000511	S.DIO UX9401F-STD/TR <INT> [C]		
D39	1710001061	DIO L407CDB [A] only		
D42	1750001360	S.DIO L709CER (9401)	T	34.6/58.7
D45	1750000520	S.DIO DAN222TL	T	91.8/57.5
D46	1750000520	S.DIO DAN222TL	T	89.6/57.5
D47	1790001211	S.DIO 1SS375-TL-E	B	29.2/63.8
D48	1750000520	S.DIO DAN222TL	B	93/61.5
D49	1790001211	S.DIO 1SS375-TL-E	B	6/52.8
D50	1750000370	S.DIO DA221 TL	B	97.2/65.8
D51	1790001211	S.DIO 1SS375-TL-E	B	3.9/79.7
D52	1750000520	S.DIO DAN222TL	B	132.5/41
D53	1790001251	S.DIO MA2S1110GL	B	133.3/47.3
D55	1750000370	S.DIO DA221 TL	B	108.8/57.4
D56	1750000370	S.DIO DA221 TL	T	108.8/60.6
D57	1750000370	S.DIO DA221 TL	B	95.1/65.8
D58	1750000520	S.DIO DAN222TL	T	94/57.5
D59	1750000520	S.DIO DAN222TL	B	104/80.4
D62	1790000700	DIO DSA3A1		
D63	1750000520	S.DIO DAN222TL	B	110.3/80.9
D65	1750000520	S.DIO DAN222TL	B	129.7/58.9
D66	1790001621	S.DIO 1SV308(TPL3,F)	T	33.9/38.8
D67	1790001621	S.DIO 1SV308(TPL3,F)	T	33.9/37.5
D68	1790001621	S.DIO 1SV308(TPL3,F)	T	29.9/23.2
D69	1790001621	S.DIO 1SV308(TPL3,F)	T	31.2/23.2
D70	1750000351	S.DIO 1SV252(TE85L,F)	T	73.6/75.5
D71	1730002411	S.ZEN MAZ8200GHL	T	118.3/86.3
D72	1750000520	S.DIO DAN222TL	T	87.4/57.5
D73	1750000520	S.DIO DAN222TL	B	93/64.5
FI1	2020001410	CER CFWLB450KGFA-B0 (CFWM450G)		
FI2	2020002470	S.CER CFWKA450KHFA001-R0	T	15.4/9.3
FI3	2030000500	S.MON DSF753SBF 46.35 MHz (FL-401)	T	24.7/28.4
FI4	2030000150	S.MON DSF753SB 46.350 MHz (FL-335)	T	35.6/28.4
FI5	2040001440	S.LC NFE31PT152Z1E9L (NFM60R20T152)	B	94.5/77
FI6	2040001440	S.LC NFE31PT152Z1E9L (NFM60R20T152)	B	94.5/73.7
FI7	2040001440	S.LC NFE31PT152Z1E9L (NFM60R20T152) [A] only	B	94.5/70.3
X1	6050012380	S.XTA CR-826 DSA535SD 15.3 MHz	T	84.2/34.7
X2	6050011730	S.XTA CR-765 SMD-49TA 3.6864 MHz <KDS>	T	48.3/11.6
X3	6070000300	S.DIS JTBM450CX24 <JJE>	T	37.1/10.3
X4	6050012320	S.XTA CR-818 SMD-49 4.194304 MHz <KDS>	T	139.1/21.9
X5	6050011720	S.XTA CR-764 SMD-49TB 19.6608 MHz <KDS>	T	120.5/44.3
L1	6200004660	S.COI MLF1608A 1R8K-T	T	82.7/54.3
L2	6200003540	S.COI MLF1608D R22K-T	B	34.4/14.7
L3	6200004480	S.COI MLF1608D R82K-T	B	29.7/16.2
L4	6200007911	S.COI ELJRF 18NJFB	B	75.9/48.3
L5	6200007120	S.COI ELJND 1R0J	T	49.4/30.8
L6	6200007120	S.COI ELJND 1R0J	T	52.7/30.8
L7	6200007120	S.COI ELJND 1R0J	T	60.5/28.4
L8	6200007170	S.COI MLF1608A 3R3K-T	T	74/27.5
L9	6200007170	S.COI MLF1608A 3R3K-T	T	69.8/32
L10	6200010600	S.COI C6342A-67NG-A	T	51.2/39.2
L11	6200003640	S.COI MLF1608E 100K-T	T	48.3/33.6
L12	6200009910	S.COI C6342A-88NG-A	T	61.6/35.5
L13	6200007120	S.COI ELJND 1R0J	T	63.8/27
L14	6200003640	S.COI MLF1608E 100K-T	T	60/31.4
L15	6200012450	S.COI 0.25-1.9-8TL 73N (COAT) <COMO>	T	73.3/35.9
L16	6200008090	S.COI LQW2BHN68NJ03L	T	69.5/28
L17	6200003640	S.COI MLF1608E 100K-T	T	73.7/32.6
L18	6130003000	S.COI #617DB-1714=P3	B	39/36.2
L19	6130003000	S.COI #617DB-1714=P3	B	34.5/42.6
L20	6200009181	S.COI ELJRE R10JFA	T	57.3/48.3
L21	6200007911	S.COI ELJRF 18NJFB	B	66.3/51.2
L22	6200005721	S.COI ELJRE 33NGFA	B	40.6/48.1
L23	6200005721	S.COI ELJRE 33NGFA	B	45.5/48.1
L24	6130003000	S.COI #617DB-1714=P3	B	27/36.2
L25	6200009151	S.COI ELJRE 82NJFA	B	54.2/53.4
L26	6200010720	S.COI C2520C-56NG-A	B	20.9/37
L27	6200009181	S.COI ELJRE R10JFA	B	66.5/69.4
L28	6200010720	S.COI C2520C-56NG-A	B	11.7/35.1
L29	6200009171	S.COI ELJRE 47NJFA	B	70.5/70.8
L30	6200009171	S.COI ELJRE 47NJFA	T	72.6/72.7
L31	6200010730	S.COI C2520C-68NG-A	B	7.8/41.5
L32	6200010730	S.COI C2520C-68NG-A	B	9.9/50.6

[MAIN UNIT] (Other than "MDC compatible")

REF NO.	PARTS NO.	DESCRIPTION	M.	H/V LOCATION
L33	6200010050	S.COI AS080547-47N	T	33.3/73.9
L34	6200007750	S.COI LQW2BHN56NJ03L	B	13.2/51.7
L35	6200006991	S.COI ELJRE 56NGFA	B	20.1/50.7
L36	6200010420	S.COI FHW1210HC 1R0JGT <JJE>	B	39.2/66
L37	6200010050	S.COI AS080547-47N	T	30/58.5
L38	6200010050	S.COI AS080547-47N	T	21.6/58
L39	6200010050	S.COI AS080547-47N	T	12.5/57.5
L40	6200010050	S.COI AS080547-47N	T	10.5/81
L41	6200002861	S.COI NLV25T-4R7J	T	122.3/54.4
L42	6200005011	S.COI NLV25T-100J	T	40.7/42.1
L43	6200010680	S.COI C2520C-R22G-A (0.22U)	T	42.1/34.9
L44	6200010740	S.COI C2520C-R27G-A	T	37.8/35.3
L45	6200003960	S.COI MLF1608A 1R0K-T	T	71.3/72.7
L46	6200005661	S.COI ELJRE 10NGFA	T	78.3/42.3
R1	7030005060	S.RES ERJ2GEJ 333 X (33K)	B	38.1/5.8
R2	7510001730	S.THE ERTJOEP 473J	T	90.4/35.6
R3	7030005050	S.RES ERJ2GEJ 103 X (10K)	T	79/11.9
R4	7030005700	S.RES ERJ2GEJ 274 X (270K)	B	88.5/18.9
R5	7030005090	S.RES ERJ2GEJ 104 X (100K)	T	90.4/34
R6	7030005160	S.RES ERJ2GEJ 105 X (1M)	T	84/19.4
R7	7030005230	S.RES ERJ2GEJ 334 X (330K)	T	84/17.5
R8	7410001130	S.ARR EXB28V102JX	T	86.1/52.4
R9	7030007570	S.RES ERJ2GEJ 122 X (1.2K)	B	34.3/11.6
R10	7030007060	S.RES ERJ2GEJ 684X (680K)	B	35.8/13.7
R11	7030010040	S.RES ERJ2GEJ-JPW	T	8.5/9.2
R12	7030004970	S.RES ERJ2GEJ 470 X (47)	T	31/17.2
R13	7030005600	S.RES ERJ2GEJ 273 X (27K)	T	8.8/15.9
R14	7030005210	S.RES ERJ2GEJ 822 X (8.2K)	T	7.5/7.4
R15	7030005070	S.RES ERJ2GEJ 683 X (68K)	B	93.3/14.4
R17	7030007570	S.RES ERJ2GEJ 122 X (1.2K)	B	93.3/15.3
R18	7030008300	S.RES ERJ2GEJ 184 X (180K)	B	79/11.8
R19	7030005230	S.RES ERJ2GEJ 334 X (330K)	T	89.3/9
R20	7030005090	S.RES ERJ2GEJ 104 X (100K)	T	85.6/8.3
R21	7030005070	S.RES ERJ2GEJ 683 X (68K)	T	86.6/8.3
R22	7030005050	S.RES ERJ2GEJ 103 X (10K)	B	38.1/7.5
R23	7030005050	S.RES ERJ2GEJ 103 X (10K)	B	38.1/9.2
R24	7030005060	S.RES ERJ2GEJ 333 X (33K)	B	37.2/10.5
R25	7030005120	S.RES ERJ2GEJ 102 X (1K)	B	100.9/51.4
R26	7030005000	S.RES ERJ2GEJ 471 X (470)	B	87.5/5.3
R27	7030007300	S.RES ERJ2GEJ 332 X (3.3K)	T	53.9/5.6
R28	7030010040	S.RES ERJ2GEJ-JPW	T	59.4/5.6
R29	7030005000	S.RES ERJ2GEJ 471 X (470)	T	116.4/14.5
R30	7030005170	S.RES ERJ2GEJ 474 X (470K)	B	37.2/9.2
R31	7030007340	S.RES ERJ2GEJ 153 X (15K)	B	36.3/9.2
R32	7030005720	S.RES ERJ2GEJ 563 X (56K)	B	37.2/7.5
R33	7030005160	S.RES ERJ2GEJ 105 X (1M)	T	80.7/8.4
R34	7030005040	S.RES ERJ2GEJ 472 X (4.7K)	T	80.7/7.2
R35	7030005120	S.RES ERJ2GEJ 102 X (1K)	T	77.6/9.5
R36	7030005030	S.RES ERJ2GEJ 152 X (1.5K)	B	27/14.7
R37	7030007300	S.RES ERJ2GEJ 332 X (3.3K)	B	15.2/8.6
R38	7030005210	S.RES ERJ2GEJ 822 X (8.2K)	T	22.9/6.2
R39	7030005600	S.RES ERJ2GEJ 273 X (27K)	T	24/9.1
R40	7030005170	S.RES ERJ2GEJ 474 X (470K)	T	25.9/10.6
R41	7030007290	S.RES ERJ2GEJ 222 X (2.2K)	T	27.6/6.2
R42	7030005090	S.RES ERJ2GEJ 104 X (100K)	B	94.8/11.7
R43	7030007300	S.RES ERJ2GEJ 332 X (3.3K)	B	94.8/10
R44	7030007340	S.RES ERJ2GEJ 153 X (15K)	B	90.7/11.9
R45	7030005220	S.RES ERJ2GEJ 223 X (22K)	B	92.8/10
R46	7030005040	S.RES ERJ2GEJ 472 X (4.7K)	T	92.1/14.1
R47	7030005050	S.RES ERJ2GEJ 103 X (10K)	T	92.1/13.1
R48	7030005060	S.RES ERJ2GEJ 333 X (33K)	B	50.9/8.6
R49	7030005160	S.RES ERJ2GEJ 105 X (1M)	B	49.7/13.7
R50	7030005090	S.RES ERJ2GEJ 104 X (100K)	B	49.7/11
R51	7030005210	S.RES ERJ2GEJ 822 X (8.2K)	T	52.4/7
R52	7030007340	S.RES ERJ2GEJ 153 X (15K)	T	59.1/12.5
R53	7030005000	S.RES ERJ2GEJ 471 X (470)	T	86.2/37.7
R54	7030010040	S.RES ERJ2GEJ-JPW	B	78.7/36.4
R55	7030005290	S.RES ERJ2GEJ 682 X (6.8K)	T	81.8/25.3
R56	7030005040	S.RES ERJ2GEJ 472 X (4.7K)	B	77.7/48.4
R57	7030005090	S.RES ERJ2GEJ 104 X (100K)	B	28.3/14.3
R58	7030005050	S.RES ERJ2GEJ 103 X (10K)	T	27.6/9
R59	7030005170	S.RES ERJ2GEJ 474 X (470K)	T	27.6/8.1
R60	7030005000	S.RES ERJ2GEJ 471 X (470)	T	30.9/10.2
R61	7030005040	S.RES ERJ2GEJ 472 X (4.7K)	T	28.8/8.5
R62	7030005040	S.RES ERJ2GEJ 472 X (4.7K)	B	32.2/11.9
R63	7030005220	S.RES ERJ2GEJ 223 X (22K)	B	92.8/8.3
R64	7030005220	S.RES ERJ2GEJ 223 X (22K)	B	92.8/6.5
R65	7030005090	S.RES ERJ2GEJ 104 X (100K)	B	50.9/9.5
R66	7030005050	S.RES ERJ2GEJ 103 X (10K)	T	86.6/11.8
R67	7030005210	S.RES ERJ2GEJ 822 X (8.2K)	T	53.4/7
R68	7030007290	S.RES ERJ2GEJ 222 X (2.2K)	B	53.7/17.9
R69	7030010040	S.RES ERJ2GEJ-JPW	T	85.6/13.6
R71	7030005090	S.RES ERJ2GEJ 104 X (100K)	T	57.7/6.3
R72	7030007290	S.RES ERJ2GEJ 222 X (2.2K)	T	64.9/55.6
R73	7030005000	S.RES ERJ2GEJ 471 X (470)	B	83.2/26.9
R74	7030007300	S.RES ERJ2GEJ 332 X (3.3K)	B	81.8/25.3
R75	7030009140	S.RES ERJ2GEJ 272 X (2.7K)	B	79.2/34
R76	7030007340	S.RES ERJ2GEJ 153 X (15K)	B	80.3/29.1
R77	7030005580	S.RES ERJ2GEJ 560 X (56)	T	78.2/47.2
R78	7030005070	S.RES ERJ2GEJ 683 X (68K)	B	81.5/34
R79	7030005040	S.RES ERJ2GEJ 472 X (4.7K)	B	74.8/50
R80	7030005040	S.RES ERJ2GEJ 472 X (4.7K)	B	70/50.9
R81	7030005110	S.RES ERJ2GEJ 224 X (220K)	B	55.5/31.4
R82	7030005110	S.RES ERJ2GEJ 224 X (220K)	B	66.3/33.3
R83	7030008400	S.RES ERJ2GEJ 182 X (1.8K)	T	32.6/10.2
R84	7030007280	S.RES ERJ2GEJ 331 X (330)	T	24.6/20.3
R85	7030005110	S.RES ERJ2GEJ 224 X (220K)	T	24.6/21.2
R86	7030007300	S.RES ERJ2GEJ 332 X (3.3K)	B	30/10.5
R87	7030007300	S.RES ERJ2GEJ 332 X (3.3K)	T	32.2/20.6
R88	7030005120	S.RES ERJ2GEJ 102 X (1K)	B	91.7/6.5
R90	7030005000	S.RES ERJ2GEJ 471 X (470)	B	89.4/18.9
R91	7030005700	S.RES ERJ2GEJ 274 X (270K)	T	85.6/11.8
R92	7030005090	S.RES ERJ2GEJ 104 X (100K)	T	87.3/13.4

M.=Mounted side (T: Mounted on the Top side, B: Mounted on the Bottom side)
S.=Surface mount

[MAIN UNIT] (Other than "MDC compatible")

REF NO.	PARTS NO.	DESCRIPTION	M.	H/V LOCATION
R93	7030005310	S.RES ERJ2GEJ 124 X (120K)	T	83.9/8.2
R94	7030005080	S.RES ERJ2GEJ 823 X (82K)	T	108/34.7
R95	7030005720	S.RES ERJ2GEJ 563 X (56K)	T	108/33.8
R96	7030005240	S.RES ERJ2GEJ 473 X (47K)	B	63.7/15.5
R97	7030005060	S.RES ERJ2GEJ 333 X (33K)	B	53.3/16.6
R98	7030005040	S.RES ERJ2GEJ 472 X (4.7K)	B	62.1/19.4
R99	7030005240	S.RES ERJ2GEJ 473 X (47K)	B	60.2/19.4
R100	7030005030	S.RES ERJ2GEJ 152 X (1.5K)	B	77.9/34.4
R101	7030008280	S.RES ERJ2GEJ 271 X (270)	B	79.2/29.1
R102	7030005530	S.RES ERJ2GEJ 100 X (10)	T	23/20.3
R103	7030005600	S.RES ERJ2GEJ 273 X (27K)	B	29.9/23.8
R104	7030007280	S.RES ERJ2GEJ 331 X (330)	T	26.9/22.6
R105	7030005600	S.RES ERJ2GEJ 273 X (27K)	B	30.9/23.8
R106	7030007270	S.RES ERJ2GEJ 151 X (150)	T	34.3/22.5
R107	7030007340	S.RES ERJ2GEJ 153 X (15K)	B	129.7/52.3
R108	7030005240	S.RES ERJ2GEJ 473 X (47K)	B	82.3/18.9
R109	7030005700	S.RES ERJ2GEJ 274 X (270K)	B	81.3/18.9
R110	7030005050	S.RES ERJ2GEJ 103 X (10K)	T	78.4/20.2
R111	7030005050	S.RES ERJ2GEJ 103 X (10K)	T	95.9/28.3
R112	7030005700	S.RES ERJ2GEJ 274 X (270K)	T	80.8/20.1
R113	7030005240	S.RES ERJ2GEJ 473 X (47K)	B	57.9/19.4
R114	7030005090	S.RES ERJ2GEJ 104 X (100K)	B	53.7/13.3
R115	7030005090	S.RES ERJ2GEJ 104 X (100K)	T	114.4/18.4
R116	7030005090	S.RES ERJ2GEJ 104 X (100K)	B	85.3/7.3
R118	7030006610	S.RES ERJ2GEJ 394 X (390K)	T	89.5/11.7
R120	7030009280	S.RES ERJ2GEJ 391 X	T	30.3/34.3
R122	7030005600	S.RES ERJ2GEJ 273 X (27K)	T	32.3/35.2
R123	7030005600	S.RES ERJ2GEJ 273 X (27K)	T	33.5/35.2
R125	7030004970	S.RES ERJ2GEJ 470 X (47)	T	35/34
R127	7030005050	S.RES ERJ2GEJ 103 X (10K)	B	79.1/18.3
R128	7030008290	S.RES ERJ2GEJ 183 X (18K)	T	112.1/45.1
R129	7030005040	S.RES ERJ2GEJ 472 X (4.7K)	T	112.1/44.1
R130	7030005070	S.RES ERJ2GEJ 683 X (68K)	T	104.9/43.2
R131	7030005070	S.RES ERJ2GEJ 683 X (68K)	T	104.9/44.1
R132	7030004980	S.RES ERJ2GEJ 101 X (100)	T	114.4/17.5
R134	7030005160	S.RES ERJ2GEJ 105 X (1M)	T	128.9/26.3
R135	7030005160	S.RES ERJ2GEJ 105 X (1M)	T	128.9/25.3
R136	7030005160	S.RES ERJ2GEJ 105 X (1M)	T	128.9/24.2
R139	7410001140	S.ARR EXB28V104JX	T	130.6/20.6
R140	7030011000	S.RES RR0510P-392-D (3.9K)	T	48.1/47.2
R141	7030008340	S.RES RR0510P-182-D (1.8K)	T	50.8/45.4
R142	7030010040	S.RES ERJ2GEJ-JPW	T	49/47.2
R143	7030011000	S.RES RR0510P-392-D (3.9K)	T	58.7/42.2
R144	7030008340	S.RES RR0510P-182-D (1.8K)	T	61.7/40.4
R145	7030010040	S.RES ERJ2GEJ-JPW	T	59.6/42.2
R146	7030011000	S.RES RR0510P-392-D (3.9K)	T	71.8/45.8
R147	7030008340	S.RES RR0510P-182-D (1.8K)	T	70/41.9
R148	7030010040	S.RES ERJ2GEJ-JPW	T	71.8/44.9
R149	7030005310	S.RES ERJ2GEJ 124 X (120K)	T	69.1/36.3
R150	7030005240	S.RES ERJ2GEJ 473 X (47K)	T	89.8/15.5
R151	7030005060	S.RES ERJ2GEJ 333 X (33K)	T	91/16.1
R152	7030005090	S.RES ERJ2GEJ 104 X (100K)	T	88.9/16.4
R153	7030007300	S.RES ERJ2GEJ 332 X (3.3K)	T	39.9/32.2
R154	7030009530	S.RES ERJ2GEJ 270 X (27)	T	42.9/40.1
R155	7030005120	S.RES ERJ2GEJ 102 X (1K)	T	41.7/32.4
R156	7030004970	S.RES ERJ2GEJ 470 X (47)	T	42.5/41.3
R157	7030005090	S.RES ERJ2GEJ 104 X (100K)	B	33.7/23.6
R158	7030005240	S.RES ERJ2GEJ 473 X (47K)	T	112.1/42.3
R159	7030005240	S.RES ERJ2GEJ 473 X (47K)	T	112.1/40.5
R160	7030005240	S.RES ERJ2GEJ 473 X (47K)	T	113.8/38.7
R161	7030005070	S.RES ERJ2GEJ 683 X (68K)	T	104.9/46.8
R162	7030005240	S.RES ERJ2GEJ 473 X (47K)	T	128.2/14.4
R163	7030005240	S.RES ERJ2GEJ 473 X (47K)	T	128.7/16.3
R164	7030005240	S.RES ERJ2GEJ 473 X (47K)	T	129.4/14.4
R165	7030005230	S.RES ERJ2GEJ 334 X (330K)	T	128.7/17.8
R166	7030005230	S.RES ERJ2GEJ 334 X (330K)	T	128.7/18.7
R167	7030005230	S.RES ERJ2GEJ 334 X (330K)	T	129.8/16.2
R168	7030006581	S.RES ERA3YED 122V (1.2K)	T	53.6/47.5
R169	7030007230	S.RES ERA3YED 102V (1K)	T	63.8/42.6
R170	7030010390	S.RES ERA3YED 821V (820)	T	74.1/43.2
R171	7030005090	S.RES ERJ2GEJ 104 X (100K)	T	56.3/46.7
R172	7030008280	S.RES ERJ2GEJ 271 X (270)	B	36.4/46.4
R173	7030007270	S.RES ERJ2GEJ 151 X (150)	B	39/31.2
R174	7030004980	S.RES ERJ2GEJ 101 X (100)	B	34.6/38.7
R175	7030004980	S.RES ERJ2GEJ 101 X (100)	B	33/38.7
R176	7030005590	S.RES ERJ2GEJ 680 X (68)	B	31.3/37.4
R177	7030005590	S.RES ERJ2GEJ 680 X (68)	B	31.3/34.9
R178	7030005240	S.RES ERJ2GEJ 473 X (47K)	T	113.8/37.8
R179	7030008300	S.RES ERJ2GEJ 184 X (180K)	T	117.6/34.6
R180	7030005720	S.RES ERJ2GEJ 563 X (56K)	T	118.3/35.3
R181	7030005220	S.RES ERJ2GEJ 223 X (22K)	T	119/36
R182	7030005120	S.RES ERJ2GEJ 102 X (1K)	T	116.9/33.9
R183	7030005070	S.RES ERJ2GEJ 683 X (68K)	T	103.1/46.8
R184	7030005220	S.RES ERJ2GEJ 223 X (22K)	T	113.8/36.9
R185	7030005070	S.RES ERJ2GEJ 683 X (68K)	B	102.3/45.6
R186	7030005160	S.RES ERJ2GEJ 105 X (1M)	T	81.8/18.9
R187	7030005060	S.RES ERJ2GEJ 333 X (33K)	T	80.6/17.5
R188	7030005090	S.RES ERJ2GEJ 104 X (100K)	T	78.5/14.9
R189	7030005720	S.RES ERJ2GEJ 563 X (56K)	T	78.5/15.8
R190	7030007350	S.RES ERJ2GEJ 393 X (39K)	T	80.6/18.4
R191	7030004980	S.RES ERJ2GEJ 101 X (100)	T	60.5/47
R192	7030004980	S.RES ERJ2GEJ 101 X (100)	B	66.3/53.2
R193	7030005050	S.RES ERJ2GEJ 103 X (10K)	B	66.3/45.2
R194	7030005110	S.RES ERJ2GEJ 224 X (220K)	B	62.7/50.8
R195	7030009320	S.RES ERJ2GEJ 4R7 X (4.7)	B	55.8/50.3
R196	7030005120	S.RES ERJ2GEJ 102 X (1K)	B	65.2/42.8
R197	7030005050	S.RES ERJ2GEJ 103 X (10K)	B	64.7/44.5
R198	7030010090	S.RES ERJ2GEJ 180 X (18)	B	36/47.6
R199	7030008280	S.RES ERJ2GEJ 271 X (270)	B	37.3/47.6
R200	7030005050	S.RES ERJ2GEJ 103 X (10K)	B	8.4/20.6
R201	7410001130	S.ARR EXB28V102JX	B	117/51.7
R202	7030005090	S.RES ERJ2GEJ 104 X (100K)	B	122.5/44.8
R203	7030005120	S.RES ERJ2GEJ 102 X (1K)	B	127.4/47.3
R204	7410000750	S.ARR EXB-V4V 104JV (100K)	B	129.6/42.7
R205	7030008010	S.RES ERJ2GEJ 123 X (12K)	T	127.5/40.1

[MAIN UNIT] (Other than "MDC compatible")

REF NO.	PARTS NO.	DESCRIPTION	M.	H/V LOCATION
R206	7030005120	S.RES ERJ2GEJ 102 X (1K)	B	127/39.5
R207	7030005050	S.RES ERJ2GEJ 103 X (10K)	T	120.9/37.5
R208	7030005050	S.RES ERJ2GEJ 103 X (10K)	T	121.6/38.2
R209	7410001130	S.ARR EXB28V102JX	B	125.8/40.8
R210	7030008010	S.RES ERJ2GEJ 123 X (12K)	T	124.2/38.4
R211	7030008010	S.RES ERJ2GEJ 123 X (12K)	T	125.9/41.1
R212	7030005160	S.RES ERJ2GEJ 105 X (1M)	T	122.1/41.1
R213	7030005090	S.RES ERJ2GEJ 104 X (100K)	B	55.3/51.8
R214	7030004980	S.RES ERJ2GEJ 101 X (100)	B	56.4/54
R215	7030005050	S.RES ERJ2GEJ 103 X (10K)	B	63.5/61.3
R216	7030005590	S.RES ERJ2GEJ 680 X (68)	B	61.9/62.3
R218	7030010040	S.RES ERJ2GEJ-JPW	B	56.4/51.8
R219	7030005050	S.RES ERJ2GEJ 103 X (10K)	B	46/49.8
R220	7030005040	S.RES ERJ2GEJ 472 X (4.7K)	B	49.3/52
R221	7030005050	S.RES ERJ2GEJ 103 X (10K)	B	44.4/49.8
R222	7030005090	S.RES ERJ2GEJ 104 X (100K)	B	17.7/33.9
R223	7030005090	S.RES ERJ2GEJ 104 X (100K)	B	16.2/33.9
R224	7030005050	S.RES ERJ2GEJ 103 X (10K)	B	15.7/32.7
R225	7030005000	S.RES ERJ2GEJ 471 X (470)	B	8/19.2
R226	7030004980	S.RES ERJ2GEJ 101 X (100)	T	109.7/53.5
R227	7030005090	S.RES ERJ2GEJ 104 X (100K)	B	107.1/49.3
R228	7410001140	S.ARR EXB28V104JX	T	103.3/49
R230	7030005050	S.RES ERJ2GEJ 103 X (10K)	B	124.7/42.7
R232	7030005530	S.RES ERJ2GEJ 100 X (10)	T	120.4/41.1
R233	7410000750	S.ARR EXB-V4V 104JV (100K)	T	130/34.7
R234	7410001130	S.ARR EXB28V102JX	B	129.4/34.4
R236	7030009530	S.RES ERJ2GEJ 270 X (27)	B	63.9/71.5
R237	7030005040	S.RES ERJ2GEJ 472 X (4.7K)	B	65.3/69.7
R238	7030008010	S.RES ERJ2GEJ 123 X (12K)	B	61.9/65.1
R240	7030005570	S.RES ERJ2GEJ 820 X (82)	B	62.4/67.4
R241	7030004980	S.RES ERJ2GEJ 101 X (100)	B	58.5/66
R242	7030004970	S.RES ERJ2GEJ 470 X (47)	T	12/33.1
R243	7030009320	S.RES ERJ2GEJ 4R7 X (4.7)	T	10/36
R244	7030005000	S.RES ERJ2GEJ 471 X (470)	B	15.1/36.3
R245	7030005530	S.RES ERJ2GEJ 100 X (10)	B	11.9/39.9
R246	7030005090	S.RES ERJ2GEJ 104 X (100K)	B	7.5/38.6
R247	7030004990	S.RES ERJ2GEJ 221 X (220)	B	7.7/36.3
R248	7410001130	S.ARR EXB28V102JX	B	103.9/47.9
R249	7410001130	S.ARR EXB28V102JX	B	123.9/27.6
R250	7410001130	S.ARR EXB28V102JX	B	122.1/25.7
R251	7410001140	S.ARR EXB28V104JX	T	124.7/28.7
R252	7410001140	S.ARR EXB28V104JX	T	122.1/25.7
R253	7030005720	S.RES ERJ2GEJ 563 X (56K)	T	9.5/40.5
R254	7030005050	S.RES ERJ2GEJ 103 X (10K)	T	7.4/42.2
R255	7030005310	S.RES ERJ2GEJ 124 X (120K)	B	6.6/38.6
R256	7030006610	S.RES ERJ2GEJ 394 X (390K)	T	13/41
R257	7030005040	S.RES ERJ2GEJ 472 X (4.7K)	T	9/42.2
R258	7030005170	S.RES ERJ2GEJ 474 X (470K)	T	11/44.5
R259	7030005090	S.RES ERJ2GEJ 104 X (100K)	B	6/45.1
R260	7030005090	S.RES ERJ2GEJ 104 X (100K)	B	6/47
R261	7410001130	S.ARR EXB28V102JX	B	99.7/43.5
R262	7410001130	S.ARR EXB28V102JX	T	100.2/37.4
R263	7410001130	S.ARR EXB28V102JX	B	97/40.7
R264	7410001140	S.ARR EXB28V104JX	T	103.8/37
R265	7030005050	S.RES ERJ2GEJ 103 X (10K)	T	103.8/39.2
R266	7410001130	S.ARR EXB28V102JX	B	120.1/23.5
R267	7410001130	S.ARR EXB28V102JX	B	118.3/21.7
R268	7410001130	S.ARR EXB28V102JX	B	116.5/19.9
R269	7030005090	S.RES ERJ2GEJ 104 X (100K)	T	119.4/20.8
R271	7030004980	S.RES ERJ2GEJ 101 X (100)	T	77.6/78.5
R272	7030007280	S.RES ERJ2GEJ 331 X (330)	T	61/76.5
R273	7030005050	S.RES ERJ2GEJ 103 X (10K) [E]	T	62.3/76.1
	7030005050	S.RES ERJ2GEJ 103 X (10K) [C]		
R274	7030004980	S.RES ERJ2GEJ 101 X (100)	T	56.7/69.3
R275	7030005030	S.RES ERJ2GEJ 152 X (1.5K)	T	64.8/73.8
R276	7030007300	S.RES ERJ2GEJ 332 X (3.3K) [A]	T	65.8/73.8
	7030005040	S.RES ERJ2GEJ 472 X (4.7K) [E]		
	7030005040	S.RES ERJ2GEJ 472 X (4.7K) [C]		
R277	7030005050	S.RES ERJ2GEJ 103 X (10K)	B	4.8/45.6
R278	7030005050	S.RES ERJ2GEJ 103 X (10K)	T	132.2/29.9
R279	7030005090	S.RES ERJ2GEJ 104 X (100K)	T	131.3/29.9
R280	7410001130	S.ARR EXB28V102JX	B	95.2/38.9
R281	7030005090	S.RES ERJ2GEJ 104 X (100K)	T	93.7/48.8
R282	7410000750	S.ARR EXB-V4V 104JV (100K)	T	97.2/45.3
R283	7410001130	S.ARR EXB28V102JX	T	103.1/21.7
R284	7030005120	S.RES ERJ2GEJ 102 X (1K)	T	111.2/25.1
R285	7410001130	S.ARR EXB28V102JX	B	107.1/19.9
R286	7410001140	S.ARR EXB28V104JX	T	121.7/22.2
R287	7030005580	S.RES ERJ2GEJ 560 X (56) [A]	T	55.7/72.6
	7030004990	S.RES ERJ2GEJ 221 X (220) [E]		
	7030004990	S.RES ERJ2GEJ 221 X (220) [C]		
R288	7030005100	S.RES ERJ2GEJ 154 X (150K)	T	54.1/68.2
R289	7030005170	S.RES ERJ2GEJ 474 X (470K) [A] only	B	38/63.7
R290	7520000260	S.POS PRF18BB471QB1RB [A] only	T	33.9/63
R291	7030005120	S.RES ERJ2GEJ 102 X (1K)	T	109.2/24.5
R292	7030006070	S.RES ERJ12YJ101U (100)	B	43.6/66.1
R293	7030005120	S.RES ERJ2GEJ 102 X (1K)	T	50.6/70.5
R294	7030005050	S.RES ERJ2GEJ 103 X (10K)	T	51.7/68.2
R295	7030008290	S.RES ERJ2GEJ 183 X (18K)	T	50.6/71.4
R296	7030005040	S.RES ERJ2GEJ 472 X (4.7K)	T	53.8/64.2
R297	7030008010	S.RES ERJ2GEJ 123 X (12K)	T	50.5/68.6
R298	7030005090	S.RES ERJ2GEJ 104 X (100K)	T	45.6/69.9
R300	7030005050	S.RES ERJ2GEJ 103 X (10K)	B	99.9/59.6
R301	7030007290	S.RES ERJ2GEJ 222 X (2.2K)	T	106.2/55.6
R302	7030000480	S.RES MCR10EZHJ 6.8K (682)	T	79/64.4
R303	7030000480	S.RES MCR10EZHJ 6.8K (682)	T	80.9/64.4
R304	7030000440	S.RES MCR10EZHJ 3.3K (332)	T	82.8/64.4
R305	7030005050	S.RES ERJ2GEJ 103 X (10K)	T	40.3/19.4
R306	7030005040	S.RES ERJ2GEJ 472 X (4.7K)	T	41/21.7
R307	7030005050	S.RES ERJ2GEJ 103 X (10K)	B	27/63
R309	7030005070	S.RES ERJ2GEJ 683 X (68K)	T	89.9/7.2
R310	7030004980	S.RES ERJ2GEJ 101 X (100)	B	109.3/62.8
R311	7030000220	S.RES MCR10EZHJ 47 (470)	B	15/76.9
R312	7030005700	S.RES ERJ2GEJ 274 X (270K)	B	31.5/62.4
R313	7030003370	S.RES ERJ3GEYJ 271 V (270)	B	8.6/54

M.=Mounted side (T: Mounted on the Top side, B: Mounted on the Bottom side)
S.=Surface mount

[MAIN UNIT] (Other than "MDC compatible")

REF NO.	PARTS NO.	DESCRIPTION	M.	H/V LOCATION
R314	7030005600	S.RES ERJ2GEJ 273 X (27K)	B	3/53
R315	7030000220	S.RES MCR10EZHJ 47 (470)	B	3.5/57.4
R316	7030005170	S.RES ERJ2GEJ 474 X (470K)	T	90.8/11.3
R317	7030005160	S.RES ERJ2GEJ 105 X (1M)	B	108.3/83.7
R318	7030005160	S.RES ERJ2GEJ 105 X (1M)	B	112.5/82.7
R319	7030005120	S.RES ERJ2GEJ 102 X (1K)	B	112.1/81.5
R320	7030005160	S.RES ERJ2GEJ 105 X (1M)	B	107.2/82.4
R321	7030004970	S.RES ERJ2GEJ 470 X (47)	B	108.4/82
R322	7030005600	S.RES ERJ2GEJ 273 X (27K)	B	2.1/79.2
R323	7030003370	S.RES ERJ3GEYJ 271 V (270)	B	6.3/78.7
R324	7030000620	S.RES MCR10EZHJ 100 K (104)	B	5.6/85.5
R325	7030005050	S.RES ERJ2GEJ 103 X (10K)	B	130.5/45.2
R326	7030005090	S.RES ERJ2GEJ 104 X (100K)	B	131.8/51.7
R327	7030007290	S.RES ERJ2GEJ 222 X (2.2K)	B	131.1/54.2
R328	7030005090	S.RES ERJ2GEJ 104 X (100K)	B	134.2/51.7
R332	7030005090	S.RES ERJ2GEJ 104 X (100K)	T	109.6/27.9
R333	7030005120	S.RES ERJ2GEJ 102 X (1K)	T	109.6/26.9
R334	7030000100	S.RES MCR10EZHJ 4.7 (4R7)	T	101.4/79.7
R335	7030005050	S.RES ERJ2GEJ 103 X (10K)	T	101.8/83.9
R336	7030005120	S.RES ERJ2GEJ 102 X (1K)	T	111.3/78.5
R337	7410001130	S.ARR EXB28V102JX	T	104.6/75.9
R338	7030005651	S.RES ERA3YKD 304V (300K)	T	113.6/54.3
R339	7030005871	S.RES ERA3YKD 104V (100K)	T	113.6/52.9
R340	7030003560	S.RES ERJ3GEYJ 103 V (10K)	T	136.3/65.7
R341	7030003560	S.RES ERJ3GEYJ 103 V (10K)	B	130.7/85.9
R342	7030005090	S.RES ERJ2GEJ 104 X (100K)	B	135.4/52.2
R343	7030007290	S.RES ERJ2GEJ 222 X (2.2K)	B	138.2/49.4
R344	7030005110	S.RES ERJ2GEJ 224 X (220K)	B	133.3/54.6
R345	7030005110	S.RES ERJ2GEJ 224 X (220K)	B	133.3/56.3
R346	7030008410	S.RES ERJ2GEJ 392 X (3.9K)	B	137/52.2
R347	7030005050	S.RES ERJ2GEJ 103 X (10K)	B	137.8/53.7
R348	7030005700	S.RES ERJ2GEJ 274 X (270K)	B	129.1/77.2
R349	7030005090	S.RES ERJ2GEJ 104 X (100K)	B	127.8/77.7
R350	7030005120	S.RES ERJ2GEJ 102 X (1K)	B	139.1/47.8
R351	7030004980	S.RES ERJ2GEJ 101 X (100)	B	136.3/38.1
R352	7030008300	S.RES ERJ2GEJ 184 X (180K)	B	139.7/39
R353	7030005230	S.RES ERJ2GEJ 334 X (330K)	B	138.2/47.8
R354	7030010040	S.RES ERJ2GEJ-JPW	T	140.4/36
R355	7030008280	S.RES ERJ2GEJ 271 X (270)	B	139.7/34.3
R356	7540000290	ABS ERZV10D220		
R359	7030005090	S.RES ERJ2GEJ 104 X (100K)	B	114.8/82.9
R360	7030005090	S.RES ERJ2GEJ 104 X (100K)	T	80.6/5.3
R361	7030005600	S.RES ERJ2GEJ 273 X (27K)	T	78.4/5.3
R362	7030005050	S.RES ERJ2GEJ 103 X (10K)	T	124.8/50.2
R363	7030005120	S.RES ERJ2GEJ 102 X (1K)	T	42.9/38.3
R364	7030009140	S.RES ERJ2GEJ 272 X (2.7K)	T	42.9/37.4
R365	7030004970	S.RES ERJ2GEJ 470 X (47)	T	38.3/37.9
R366	7030005050	S.RES ERJ2GEJ 103 X (10K)	B	131.4/63.4
R367	7030005000	S.RES ERJ2GEJ 471 X (470)	B	130.1/63
R368	7030005050	S.RES ERJ2GEJ 103 X (10K)	T	78.3/7.6
R370	7030005010	S.RES ERJ2GEJ 681 X (680)	T	71.2/70.4
R371	7030005050	S.RES ERJ2GEJ 103 X (10K)	T	119.5/84.6
R372	7030005040	S.RES ERJ2GEJ 472 X (4.7K)	T	25.9/8.1
R373	7030005040	S.RES ERJ2GEJ 472 X (4.7K)	T	74/21.6
R375	7030005030	S.RES ERJ2GEJ 152 X (1.5K)	T	27.6/5.3
R376	7030005160	S.RES ERJ2GEJ 105 X (1M)	B	109.1/12.1
R377	7030005160	S.RES ERJ2GEJ 105 X (1M)	B	110.9/12.1
R378	7410001140	S.ARR EXB28V104JX	B	100.7/18.3
R379	7030005090	S.RES ERJ2GEJ 104 X (100K)	T	111.6/23.8
R386	7030005120	S.RES ERJ2GEJ 102 X (1K)	T	105.8/85.1
R387	7030005120	S.RES ERJ2GEJ 102 X (1K)	T	107.8/85.1
R389	7030005090	S.RES ERJ2GEJ 104 X (100K)	T	110.4/10.7
R390	7030005120	S.RES ERJ2GEJ 102 X (1K)	B	79.8/46.1
R391	7030005120	S.RES ERJ2GEJ 102 X (1K)	T	79.3/41.3
C1	4030017420	S.CER ECJ0EC1H470J	T	88.9/54.3
C2	4030017420	S.CER ECJ0EC1H470J	T	89.9/54.3
C3	4030017420	S.CER ECJ0EC1H470J	T	41.5/15.4
C4	4030017420	S.CER ECJ0EC1H470J	B	50/15
C5	4030017460	S.CER ECJ0EB1E102K	T	89.4/34
C6	4550007080	S.TAN TEESVA 1C 106M8R	T	80.8/55.1
C7	4030017420	S.CER ECJ0EC1H470J	T	84/18.4
C8	4030017420	S.CER ECJ0EC1H470J	T	89.9/52
C9	4030016930	S.CER ECJ0EB1A104K	T	88.9/52
C10	4030016930	S.CER ECJ0EB1A104K	T	80.6/50.7
C11	4030016930	S.CER ECJ0EB1A104K	T	10.9/18.8
C12	4030016930	S.CER ECJ0EB1A104K	T	8.5/7.4
C13	4030016930	S.CER ECJ0EB1A104K	T	85.6/10
C14	4030016930	S.CER ECJ0EB1A104K	T	86.6/10
C15	4030017460	S.CER ECJ0EB1E102K	T	41.5/7.7
C16	4550000460	S.TAN TEESVA 1C 105M8R	T	42.7/6.2
C17	4550000460	S.TAN TEESVA 1C 105M8R	B	42.7/6.2
C18	4030017420	S.CER ECJ0EC1H470J	T	41.5/14.5
C19	4030017420	S.CER ECJ0EC1H470J	B	50/15.9
C20	4030016970	S.CER ECJ0EB1C223K	B	100.9/52.3
C21	4030017420	S.CER ECJ0EC1H470J	T	41.5/13.5
C22	4030017420	S.CER ECJ0EC1H470J	T	41.5/12.6
C23	4030016930	S.CER ECJ0EB1A104K	T	51.8/5.6
C24	4030017420	S.CER ECJ0EC1H470J	B	39.8/9.8
C25	4030017420	S.CER ECJ0EC1H470J	T	61.4/6
C26	4030016930	S.CER ECJ0EB1A104K	B	37.2/5.8
C27	4030017760	S.CER ECJ0EB1H222K	B	36.3/7.5
C28	4030016790	S.CER ECJ0EB1C103K	T	79.3/7.6
C29	4030017460	S.CER ECJ0EB1E102K	T	79/13.6
C30	4030016930	S.CER ECJ0EB1A104K	T	78.1/13.6
C31	4030017460	S.CER ECJ0EB1E102K	T	80.6/51.7
C32	4030017500	S.CER ECJ0EC1H560J	B	33.3/15.9
C33	4030016930	S.CER ECJ0EB1A104K	B	34.8/12.8
C34	4030017570	S.CER ECJ0EC1H040B	B	32.1/15.4
C35	4030017590	S.CER ECJ0EC1H070C	B	30.9/15.9
C36	4030016930	S.CER ECJ0EB1A104K	T	22.4/14.9
C37	4030017360	S.CER ECJ0EC1H030B	B	28.3/15.4
C38	4030016930	S.CER ECJ0EB1A104K	T	22/6.2
C39	4030016930	S.CER ECJ0EB1A104K	B	13.6/6.2

[MAIN UNIT] (Other than "MDC compatible")

REF NO.	PARTS NO.	DESCRIPTION	M.	H/V LOCATION
C40	4030016930	S.CER ECJ0EB1A104K	T	23.8/6.2
C41	4030016930	S.CER ECJ0EB1A104K	T	22/12.5
C42	4030016930	S.CER ECJ0EB1A104K	T	23/12.5
C43	4030017430	S.CER ECJ0EC1H101J	T	26.4/9.4
C44	4030017430	S.CER ECJ0EC1H101J	T	25.5/9.4
C45	4030017790	S.CER ECJ0EB1E682K	B	91.7/10
C46	4030016930	S.CER ECJ0EB1A104K	B	93.8/10
C47	4030016970	S.CER ECJ0EB1C223K	T	92.1/15.1
C48	4030017710	S.CER ECJ0EC1H181J	B	49.7/9.1
C49	4550007080	S.TAN TEESVA 1C 106M8R	T	52.1/15.4
C50	4030017460	S.CER ECJ0EB1E102K	T	54.3/12
C51	4030017400	S.CER ECJ0EC1H220J	T	47.8/19
C52	4030017400	S.CER ECJ0EC1H220J	T	44.7/7.8
C53	4030017900	S.CER ECJ0EB1C123K	T	59.1/10.6
C54	4030018080	S.CER ECJ0EB1H182K	T	59.1/11.5
C55	4030016790	S.CER ECJ0EB1C103K	T	64.5/57
C56	4030017620	S.CER ECJ0EC1H100C	T	87.7/35.5
C57	4030016930	S.CER ECJ0EB1A104K	T	80.1/36.7
C58	4030017430	S.CER ECJ0EC1H101J	T	85.2/38.6
C59	4030017460	S.CER ECJ0EB1E102K	T	81.8/24.3
C60	4030017420	S.CER ECJ0EC1H470J	T	82.9/41.5
C63	4030017620	S.CER ECJ0EC1H100C	T	84/39.1
C64	4030017780	S.CER ECJ0EB1E472K	T	81.3/41.3
C65	4030017460	S.CER ECJ0EB1E102K	T	27.6/10.6
C66	4550006050	S.TAN TEESVA 0J 106M8R	T	31.1/6.8
C67	4030017460	S.CER ECJ0EB1E102K	T	27.6/7.1
C68	4030017460	S.CER ECJ0EB1E102K	T	30.5/9
C69	4030017460	S.CER ECJ0EB1E102K	T	32.6/15.4
C70	4030017420	S.CER ECJ0EC1H470J	B	28.3/13.4
C71	4030016940	S.CER ECJ0EB1A393K	B	91.7/8.3
C72	4030018860	S.CER ECJ0EB0J105K	B	50.7/11
C73	4030017750	S.CER ECJ0EB1E122K	B	51.3/16.6
C74	4030016930	S.CER ECJ0EB1A104K	B	52.3/16.6
C75	4030016930	S.CER ECJ0EB1A104K	B	56.2/12.6
C77	4030017460	S.CER ECJ0EB1E102K	B	54.2/16.6
C78	4030017460	S.CER ECJ0EB1E102K	B	53.7/9
C79	4550007080	S.TAN TEESVA 1C 106M8R	T	66.5/55.3
C80	4030017780	S.CER ECJ0EB1E472K	B	79.2/35
C81	4550000460	S.TAN TEESVA 1C 105M8R	B	82.2/36.4
C82	4030017460	S.CER ECJ0EB1E102K	B	84.1/26.9
C83	4550000460	S.TAN TEESVA 1C 105M8R	B	84/32.5
C84	4030017460	S.CER ECJ0EB1E102K	T	78.2/48.8
C85	4030017380	S.CER ECJ0EC1H050B	B	77.1/47.2
C86	4030017350	S.CER ECJ0EC1H020B	B	74.8/48.3
C87	4030017580	S.CER ECJ0EC1H060C	B	73.7/48.3
C88	4030017380	S.CER ECJ0EC1H050B	B	72.4/48.6
C89	4030017580	S.CER ECJ0EC1H060C	B	71.1/49.1
C90	4030017350	S.CER ECJ0EC1H020B	B	70/49.1
C91	4030016790	S.CER ECJ0EB1C103K	T	27.3/17.3
C92	4030017460	S.CER ECJ0EB1E102K	T	25.2/22.4
C93	4030017680	S.CER ECJ0EC1H820J	T	32.6/12.6
C94	4030017460	S.CER ECJ0EB1E102K	B	27.8/12.5
C95	4030016790	S.CER ECJ0EB1C103K	T	28.9/20.1
C96	4030016930	S.CER ECJ0EB1A104K	B	32.8/8.1
C97	4030016930	S.CER ECJ0EB1A104K	B	29.6/9
C98	4030016930	S.CER ECJ0EB1A104K	B	89.3/7.3
C99	4030016930	S.CER ECJ0EB1A104K	B	90.7/14.8
C100	4030016930	S.CER ECJ0EB1A104K	T	87.3/14.3
C101	4030017710	S.CER ECJ0EC1H181J	T	83.9/7.2
C102	4030016930	S.CER ECJ0EB1A104K	T	108/32.8
C103	4030016930	S.CER ECJ0EB1A104K	B	55.3/19.3
C104	4550003250	S.TAN TEESVA 1V 474M8R	B	67.2/24.2
C105	4030017420	S.CER ECJ0EC1H470J	T	49.2/29.4
C106	4030017460	S.CER ECJ0EB1E102K	B	78/29.1
C107	4030016930	S.CER ECJ0EB1A104K	B	54.2/28.8
C109	4550006480	S.TAN TEESVA 1C 475M8R	B	56.1/27.7
C110	4030017420	S.CER ECJ0EC1H470J	T	60.1/27
C111	4030016930	S.CER ECJ0EB1A104K	B	66.3/30.3
C112	4030017460	S.CER ECJ0EB1E102K	B	67.4/30.3
C113	4030017420	S.CER ECJ0EC1H470J	T	72.1/26.6
C114	4030016790	S.CER ECJ0EB1C103K	T	24.3/22.4
C115	4030016790	S.CER ECJ0EB1C103K	T	23/21.2
C116	4030016790	S.CER ECJ0EB1C103K	T	28.5/22.6
C118	4030017640	S.CER ECJ0EC1H150J	T	20.5/28.7
C120	4030016790	S.CER ECJ0EB1C103K	T	32.6/22.5
C121	4030017570	S.CER ECJ0EC1H040B	T	34.8/23.5
C122	4030017390	S.CER ECJ0EC1H180J	T	39.8/28.9
C124	4030016930	S.CER ECJ0EB1A104K	B	90.3/18.9
C125	4030017460	S.CER ECJ0EB1E102K	B	128.5/52.6
C126	4030016930	S.CER ECJ0EB1A104K	T	79.6/20.6
C127	4030016930	S.CER ECJ0EB1A104K	B	82.8/20.1
C128	4030016930	S.CER ECJ0EB1A104K	T	78.4/19.3
C129	4030016930	S.CER ECJ0EB1A104K	B	63.7/16.4
C130	4030016930	S.CER ECJ0EB1A104K	B	135.6/25.4
C131	4030017660	S.CER ECJ0EC1H330J	T	135.9/25.7
C132	4030017660	S.CER ECJ0EC1H330J	T	135.9/18
C133	4030018010	S.CER ECJ0EC1H360J	T	48.1/35.5
C134	4030017640	S.CER ECJ0EC1H150J	T	49.4/34.8
C135	4030017660	S.CER ECJ0EC1H330J	T	64.1/32.5
C136	4030017340	S.CER ECJ0EC1H010B	T	71.1/30.8
C137	4030017570	S.CER ECJ0EC1H040B	T	71.1/29.9
C138	4030017730	S.CER ECJ0EB1E471K	T	71.9/33
C139	4030017390	S.CER ECJ0EC1H180J	T	62.1/32
C140	4030017360	S.CER ECJ0EC1H030B	T	72.5/30.7
C141	4030017360	S.CER ECJ0EC1H030B	T	72.1/29
C142	4030018860	S.CER ECJ0EB0J105K	T	89.5/12.7
C143	4030017400	S.CER ECJ0EC1H220J	T	71.3/36.6
C145	4030016790	S.CER ECJ0EB1C103K	T	31.4/35.2
C147	4030016790	S.CER ECJ0EB1C103K	T	34.5/35.2
C148	4030016790	S.CER ECJ0EB1C103K	T	30.9/26.4
C149	4030016930	S.CER ECJ0EB1A104K	B	78.2/17.4
C150	4030018560	S.CER C2012 JB 1A 475K-T	B	86.9/19.8
C151	4030016930	S.CER ECJ0EB1A104K	T	112.1/46
C152	4030016930	S.CER ECJ0EB1A104K	T	109.6/34.3
C153	4030017460	S.CER ECJ0EB1E102K	T	111.4/34.3

M.=Mounted side (T: Mounted on the Top side, B: Mounted on the Bottom side)
S.=Surface mount

[MAIN UNIT] (Other than "MDC compatible")

REF NO.	PARTS NO.	DESCRIPTION	M.	H/V LOCATION
C154	4030018860	S.CER ECJ0EB0J105K	T	82.7/19.8
C155	4030017420	S.CER ECJ0EC1H470J	T	110.3/38.7
C156	4030017910	S.CER ECJ0EB1H152K	T	104.9/42.3
C157	4030017420	S.CER ECJ0EC1H470J	T	110.8/48.6
C158	4030017430	S.CER ECJ0EC1H101J	T	110.3/37.8
C159	4030017460	S.CER ECJ0EB1E102K	T	120.3/5.5
C160	4030017460	S.CER ECJ0EB1E102K	B	130.6/25.4
C161	4030018010	S.CER ECJ0EC1H360J	T	50.8/43.8
C162	4030017590	S.CER ECJ0EC1H070C	T	52.1/43.4
C163	4030017660	S.CER ECJ0EC1H330J	T	58.7/39.4
C164	4030017660	S.CER ECJ0EC1H330J	T	48.6/45.8
C165	4030017660	S.CER ECJ0EC1H330J	T	49.9/45.4
C166	4030017580	S.CER ECJ0EC1H060C	T	60.1/38.9
C167	4030017420	S.CER ECJ0EC1H470J	T	70/38.9
C168	4030017660	S.CER ECJ0EC1H330J	T	59.1/40.8
C169	4030017660	S.CER ECJ0EC1H330J	T	60.7/40.4
C170	4030017550	S.CER ECJ0EC1H1R5B	T	70.4/36.6
C171	4030017570	S.CER ECJ0EC1H040B	T	70/37.9
C172	4030017400	S.CER ECJ0EC1H220J	T	70/42.9
C173	4030017400	S.CER ECJ0EC1H220J	T	70/43.9
C174	4030017640	S.CER ECJ0EC1H150J	T	38.3/38.8
C175	4030016790	S.CER ECJ0EB1C103K	B	41.4/39.4
C176	4030016930	S.CER ECJ0EB1A104K	B	41/33.2
C177	4030017730	S.CER ECJ0EB1E471K	B	41/32.2
C178	4030016790	S.CER ECJ0EB1C103K	B	34.5/33
C180	4030017740	S.CER ECJ0EB1E821K	T	109.2/48.6
C181	4030016930	S.CER ECJ0EB1A104K	T	112.1/43.2
C182	4030016780	S.CER ECJ0EB1C153K	T	112.1/39.6
C183	4030017420	S.CER ECJ0EC1H470J	T	104.9/45
C184	4030017760	S.CER ECJ0EB1H222K	T	104.9/45.9
C185	4030017690	S.CER ECJ0EC1H121J	T	107.8/48.6
C186	4030016790	S.CER ECJ0EB1C103K	T	51.7/45.4
C187	4030017460	S.CER ECJ0EB1E102K	T	52.6/45.4
C188	4030016790	S.CER ECJ0EB1C103K	T	62.7/40.4
C189	4030017460	S.CER ECJ0EB1E102K	T	63.7/40.4
C190	4030017540	S.CER ECJ0EC1HR75B	T	55/48.3
C191	4030016790	S.CER ECJ0EB1C103K	T	70/40.9
C192	4030017540	S.CER ECJ0EC1HR75B	T	57.7/43
C193	4030017460	S.CER ECJ0EB1E102K	T	70/39.9
C194	4030017530	S.CER ECJ0EC1H0R5B	T	60/44.4
C195	4030016930	S.CER ECJ0EB1A104K	B	39/30
C196	4030017730	S.CER ECJ0EB1E471K	B	38.1/33.2
C197	4030016930	S.CER ECJ0EB1A104K	B	38.1/32.2
C198	4030017730	S.CER ECJ0EB1E471K	B	31.3/38.3
C199	4030016930	S.CER ECJ0EB1A104K	B	31.3/39.2
C200	4030016930	S.CER ECJ0EB1A104K	B	31.3/34
C201	4030017730	S.CER ECJ0EB1E471K	B	31.3/33.1
C202	4030017460	S.CER ECJ0EB1E102K	T	112.1/38.7
C203	4030017460	S.CER ECJ0EB1E102K	B	100.9/47
C205	4030018900	S.CER ECJ0EB0J474K	T	78.4/18.4
C206	4030016930	S.CER ECJ0EB1A104K	T	78.5/16.7
C207	4030017730	S.CER ECJ0EB1E471K	T	61/45.7
C208	4030017460	S.CER ECJ0EB1E102K	T	60/45.7
C209	4030017460	S.CER ECJ0EB1E102K	B	65/52.7
C210	4030017590	S.CER ECJ0EC1H070C	B	57.6/50.3
C211	4030017620	S.CER ECJ0EC1H100C	B	60/51.4
C212	4030017460	S.CER ECJ0EB1E102K	B	63.8/50.8
C214	4030017460	S.CER ECJ0EB1E102K	B	66.8/41.3
C215	4030017390	S.CER ECJ0EC1H180J	B	38.5/47.6
C216	4030017660	S.CER ECJ0EC1H330J	B	43.1/47.6
C217	4030017730	S.CER ECJ0EB1E471K	B	25/32.7
C218	4030016930	S.CER ECJ0EB1A104K	B	25/31.7
C219	4030017650	S.CER ECJ0EC1H270J	B	23/36.3
C220	4030017600	S.CER ECJ0EC1H080C	B	23/38
C221	4030016930	S.CER ECJ0EB1A104K	B	5.6/23.2
C222	4030017030	S.CER ECJ0EB1A273K	B	128.6/45.3
C223	4030016930	S.CER ECJ0EB1A104K	B	126.3/48.2
C224	4030017640	S.CER ECJ0EC1H150J	T	124.2/40.1
C225	4030016790	S.CER ECJ0EB1C103K	T	124.2/37.4
C226	4030017580	S.CER ECJ0EC1H060C	T	124.2/41.1
C227	4030017460	S.CER ECJ0EB1E102K	B	57.6/53.5
C228	4030017460	S.CER ECJ0EB1E102K	B	56.4/53.1
C229	4030017620	S.CER ECJ0EC1H100C	B	52.1/53.1
C230	4030017460	S.CER ECJ0EB1E102K	B	63.5/62.3
C231	4030017360	S.CER ECJ0EC1H030B	B	66.3/52.2
C232	4030017460	S.CER ECJ0EB1E102K	B	68.6/49.5
C235	4030017460	S.CER ECJ0EB1E102K	B	44.4/50.7
C236	4030017390	S.CER ECJ0EC1H180J	B	47.8/48.1
C237	4030017620	S.CER ECJ0EC1H100C	B	47.4/49.4
C240	4030017460	S.CER ECJ0EB1E102K	B	18.9/34.4
C241	4030017360	S.CER ECJ0EC1H030B	B	17/37.7
C242	4030017460	S.CER ECJ0EB1E102K	B	15/34.4
C243	4030017460	S.CER ECJ0EB1E102K	B	18.9/33.5
C244	4030017460	S.CER ECJ0EB1E102K	B	15.7/31.7
C245	4550006780	S.TAN TEESVB2 0J 476M8R	B	5.6/18.7
C246	4030016930	S.CER ECJ0EB1A104K	B	105.1/52.2
C247	4030016930	S.CER ECJ0EB1A104K	B	107/52.9
C248	4030016930	S.CER ECJ0EB1A104K	B	108.1/52
C249	4030018900	S.CER ECJ0EB0J474K	B	121.8/47.4
C250	4030017630	S.CER ECJ0EC1H120J	T	120.4/40.1
C251	4030017400	S.CER ECJ0EC1H220J	B	61.9/64.2
C252	4030017420	S.CER ECJ0EC1H470J	B	62.6/71.1
C253	4030017730	S.CER ECJ0EB1E471K	B	61.6/71.1
C254	4030017420	S.CER ECJ0EC1H470J	B	63.9/69.5
C256	4030017460	S.CER ECJ0EB1E102K	B	59.7/65.5
C257	4030017460	S.CER ECJ0EB1E102K	B	63.4/67.4
C258	4030017460	S.CER ECJ0EB1E102K	T	13.9/32.5
C259	4030017460	S.CER ECJ0EB1E102K	T	10/35
C260	4030017590	S.CER ECJ0EC1H070C	B	14.2/36.3
C261	4030017460	S.CER ECJ0EB1E102K	B	9.5/33.9
C262	4030017460	S.CER ECJ0EB1E102K	B	13.7/37.7
C263	4030017490	S.CER C1608 JB 1A 105K-T	T	14.1/33.7
C264	4030017350	S.CER ECJ0EC1H020B	B	8.4/38.6
C265	4030017420	S.CER ECJ0EC1H470J	B	8.6/36.3
C266	4030017460	S.CER ECJ0EB1E102K	B	9.5/36.3

[MAIN UNIT] (Other than "MDC compatible")

REF NO.	PARTS NO.	DESCRIPTION	M.	H/V LOCATION
C267	4030017460	S.CER ECJ0EB1E102K	B	63.9/70.5
C268	4030017640	S.CER ECJ0EC1H150J	B	68.2/69.1
C269	4030017390	S.CER ECJ0EC1H180J [A]	B	69.7/69.1
	4030017650	S.CER ECJ0EC1H270J [E]		
	4030017650	S.CER ECJ0EC1H270J [C]		
C270	4030017390	S.CER ECJ0EC1H180J	B	71.2/69
C271	4030017400	S.CER ECJ0EC1H220J [A]	T	74.3/71.7
	4030017390	S.CER ECJ0EC1H180J [E]		
	4030017390	S.CER ECJ0EC1H180J [C]		
C272	4030016930	S.CER ECJ0EB1A104K	T	7.9/39.5
C273	4030016930	S.CER ECJ0EB1A104K	T	9.5/39.5
C274	4030017460	S.CER ECJ0EB1E102K	T	7.4/41.2
C275	4030016930	S.CER ECJ0EB1A104K	T	15/41
C276	4030017620	S.CER ECJ0EC1H100C	B	10.5/41
C277	4030017460	S.CER ECJ0EB1E102K	T	14/41
C278	4030017350	S.CER ECJ0EC1H020B	B	8.9/43.6
C279	4030017460	S.CER ECJ0EB1E102K	B	6.9/44.2
C280	4030017550	S.CER ECJ0EC1H1R5B	B	9.4/46.1
C281	4030017420	S.CER ECJ0EC1H470J	T	97.9/34.2
C282	4030017420	S.CER ECJ0EC1H470J	T	102.1/40
C283	4030017420	S.CER ECJ0EC1H470J	B	97.4/44.6
C284	4030017420	S.CER ECJ0EC1H470J	T	94.8/35.5
C285	4030017420	S.CER ECJ0EC1H470J	B	94.2/44.4
C286	4030017420	S.CER ECJ0EC1H470J	T	92.1/43.3
C287	4030017420	S.CER ECJ0EC1H470J	T	92.1/41.6
C288	4030017460	S.CER ECJ0EB1E102K	B	4.8/46.5
C290	4030017400	S.CER ECJ0EC1H220J	T	74.3/73.6
C291	4030017730	S.CER ECJ0EB1E471K	T	69.3/76.1
C292	4550000560	S.TAN TEESVA 1V 334M8R	T	67.6/74.4
C294	4030017420	S.CER ECJ0EC1H470J	T	70.4/76.1
C295	4030017420	S.CER ECJ0EC1H470J	T	56.7/67.3
C296	4510008530	S.ELE EEE1HA2R2SR	T	59.6/80
C297	4030017460	S.CER ECJ0EB1E102K	T	56.7/68.3
C299	4030017460	S.CER ECJ0EB1E102K	B	6.9/47.9
C300	4030017340	S.CER ECJ0EC1H010B	B	8.9/48.5
C301	4030017580	S.CER ECJ0EC1H060C	B	13.2/49.5
C302	4030017460	S.CER ECJ0EB1E102K	B	4.4/44.4
C303	4030016930	S.CER ECJ0EB1A104K	B	129.6/32
C304	4030017420	S.CER ECJ0EC1H470J	B	90/43.4
C305	4030011140	S.CER GRM31M2C2H120JV01L (GRM42-6 CH)	T	27.6/78.7
C306	4030011120	S.CER GRM31M2C2H100JV01L (GRM42-6 CH)	T	27.6/76.1
C307	4030011120	S.CER GRM31M2C2H100JV01L (GRM42-6 CH)	T	27.7/71.8
C308	4030011070	S.CER GRM31M2C2H5R0CY21L (GRM42-6 CH) [A]	T	27.7/69.2
	4030011140	S.CER GRM31M2C2H120JV01L (GRM42-6 CH) [E]		
	4030011140	S.CER GRM31M2C2H120JV01L (GRM42-6 CH) [C]		
C309	4030017460	S.CER ECJ0EB1E102K	T	71.5/76.1
C310	4030017420	S.CER ECJ0EC1H470J	T	43/76.1
C311	4030017460	S.CER ECJ0EB1E102K	T	44.1/76.1
C312	4030017730	S.CER ECJ0EB1E471K	T	45.3/76.1
C313	4510008680	S.ELE EEE1EA220SP	T	51.7/77.7
C314	4030017730	S.CER ECJ0EB1E471K	B	40.2/68.3
C315	4030017460	S.CER ECJ0EB1E102K	T	55.7/73.6
C316	4030016790	S.CER ECJ0EB1C103K	T	54.1/72.6
C317	4030011600	S.CER C1608 JB 1E 104K-T	T	54.1/67
C318	4030017460	S.CER ECJ0EB1E102K [A] only	T	35.1/63.3
C319	4030017460	S.CER ECJ0EB1E102K [A] only	T	47.3/67.4
C320	4030017580	S.CER ECJ0EC1H060C	B	15/52.7
C321	4030017460	S.CER ECJ0EB1E102K	B	14.9/49.5
C322	4030017600	S.CER ECJ0EC1H080C	B	19.3/52
C323	4030017570	S.CER ECJ0EC1H040B	B	20/49.6
C324	4030017420	S.CER ECJ0EC1H470J	B	90/41.8
C325	4030017460	S.CER ECJ0EB1E102K	T	72.5/64.9
C326	4030017420	S.CER ECJ0EC1H470J	B	46.2/64.3
C327	4030017460	S.CER ECJ0EB1E102K	B	84.2/79
C328	4030017460	S.CER ECJ0EB1E102K	B	83.2/79
C329	4030017460	S.CER ECJ0EB1E102K	B	82.1/79
C330	4030017460	S.CER ECJ0EB1E102K	B	81/79
C331	4030017460	S.CER ECJ0EB1E102K	B	80/79
C332	4030016930	S.CER ECJ0EB1A104K	T	51.9/71.9
C334	4030017460	S.CER ECJ0EB1E102K	T	49.5/68.6
C335	4030017460	S.CER ECJ0EB1E102K	T	53.8/63.2
C336	4030017580	S.CER ECJ0EC1H060C	B	20.8/52
C337	4030017390	S.CER ECJ0EC1H180J	B	25.1/51.2
C338	4510008600	S.ELE EEE1CA4R7NR	T	79.1/69.1
C339	4030017460	S.CER ECJ0EB1E102K	T	79.1/62.1
C340	4030017460	S.CER ECJ0EB1E102K	T	37.5/20.8
C341	4030016790	S.CER ECJ0EB1C103K	T	41.9/19.4
C342	4030017200	S.CER GRM31BR32J102KY01L (GHM1030 R)	T	25.3/62.5
C343	4030011270	S.CER GRM31M2C2H200JV01L (GRM42-6 CH)	T	22.1/63.9
C345	4030011170	S.CER GRM31M2C2H180JV01L (GRM42-6 CH)	T	17.3/57.4
C346	4030011170	S.CER GRM31M2C2H180JV01L (GRM42-6 CH)	T	30.2/62.8
C347	4030017520	S.CER ECJ0EC1H0R3B	B	25.4/63
C348	4030017460	S.CER ECJ0EB1E102K	B	31.5/63.4
C349	4030016930	S.CER ECJ0EB1A104K	T	100.5/63.5
C350	4550005980	S.TAN TEESVA 1A 475M8R	T	101.6/62
C351	4030018860	S.CER ECJ0EB0J105K	T	110.6/67.4
C352	4030017460	S.CER ECJ0EB1E102K	B	124.6/59.6
C353	4550005980	S.TAN TEESVA 1A 475M8R	B	124.5/61.3
C354	4550006250	S.TAN TEESVA 1A 106M8R	B	112.9/61.7
C355	4030017420	S.CER ECJ0EC1H470J	B	112.6/60.1
C356	4030011270	S.CER GRM31M2C2H200JV01L (GRM42-6 CH)	T	14.7/62.9
C357	4030011270	S.CER GRM31M2C2H200JV01L (GRM42-6 CH)	T	10.4/62.9
C358	4030007030	S.CER C1608 CH 1H 150J-T	B	10.6/56.4

M.=Mounted side (T: Mounted on the Top side, B: Mounted on the Bottom side)
S.=Surface mount

[MAIN UNIT] (Other than "MDC compatible")

REF NO.	PARTS NO.	DESCRIPTION	M.	H/V LOCATION
C359	4030011340	S.CER C1608 CH 1H 471J-T	B	9.4/56.4
C360	4030017460	S.CER ECJ0EB1E102K	B	4/53
C361	4030017460	S.CER ECJ0EB1E102K	T	103.9/53.5
C362	4030017460	S.CER ECJ0EB1E102K	T	108.2/24.5
C363	4510008540	S.ELE EEE1CA100SR	T	139.1/31.9
C365	4550007650	S.TAN F931V105MAABMA	B	106.7/65
C366	4550007650	S.TAN F931V105MAABMA	B	104.2/65
C367	4550007650	S.TAN F931V105MAABMA	B	101.6/65
C368	4550007650	S.TAN F931V105MAABMA	B	99.5/64.6
C369	4030011270	S.CER GRM31M2C2H200JV01L (GRM42-6 CH)	T	15.8/78.9
C370	4030011270	S.CER GRM31M2C2H200JV01L (GRM42-6 CH)	T	15.8/83.1
C371	4030017460	S.CER ECJ0EB1E102K	B	4.1/81.6
C372	4030006850	S.CER C1608 JB 1H 471K-T	B	8.3/77.1
C373	4030016930	S.CER ECJ0EB1A104K	B	130.9/51.7
C374	4030016930	S.CER ECJ0EB1A104K	B	133/51.3
C375	4030016930	S.CER ECJ0EB1A104K	B	132.4/54.6
C377	4030017460	S.CER ECJ0EB1E102K	T	105.9/51.9
C378	4030017460	S.CER ECJ0EB1E102K	T	108.2/78
C379	4030016930	S.CER ECJ0EB1A104K	B	108.4/80.3
C380	4030017460	S.CER ECJ0EB1E102K	B	120.5/83.2
C381	4030016790	S.CER ECJ0EB1C103K	B	135.9/70.5
C383	4030017460	S.CER ECJ0EB1E102K	B	135.9/71.5
C384	4510008870	S.ELE EEE1AA471UP	T	129.9/64.9
C386	4030016930	S.CER ECJ0EB1A104K	B	138.8/53.7
C387	4030017720	S.CER ECJ0EB1H331K	B	135.4/51.3
C388	4030018860	S.CER ECJ0EB0J105K	B	138.6/52.2
C389	4030016930	S.CER ECJ0EB1A104K	B	139.1/49.4
C390	4030016930	S.CER ECJ0EB1A104K	B	137.8/55.4
C391	4030016930	S.CER ECJ0EB1A104K	T	101.8/82.3
C392	4030017460	S.CER ECJ0EB1E102K	B	127.8/76.8
C393	4030017460	S.CER ECJ0EB1E102K	B	99/79
C394	4030017420	S.CER ECJ0EC1H470J	B	115.4/68
C395	4030017460	S.CER ECJ0EB1E102K	B	126.5/77.1
C397	4030017460	S.CER ECJ0EB1E102K	B	99.8/86.3
C398	4030017420	S.CER ECJ0EC1H470J	B	100.8/86.3
C399	4030018860	S.CER ECJ0EB0J105K	B	136.3/37.1
C400	4030016930	S.CER ECJ0EB1A104K	B	139.7/35.3
C411	4510008780	S.ELE EEE1EA471P	T	117.2/63.6
C412	4510008780	S.ELE EEE1EA471P	T	132.7/54.3
C413	4030018900	S.CER ECJ0EB0J474K	B	135.1/46.8
C414	4510008540	S.ELE EEE1CA100SR	T	118.7/50.5
C415	4030016930	S.CER ECJ0EB1A104K	B	103/23.8
C416	4030016930	S.CER ECJ0EB1A104K	B	120.3/51.6
C417	4030016790	S.CER ECJ0EB1C103K	B	115.6/52.8
C418	4030017460	S.CER ECJ0EB1E102K	T	109.6/54.5
C419	4030016790	S.CER ECJ0EB1C103K	T	42.9/39.2
C420	4030017500	S.CER ECJ0EC1H560J	T	41/37.4
C421	4030016930	S.CER ECJ0EB1A104K	B	36/24.7
C422	4030016790	S.CER ECJ0EB1C103K	T	43.1/31.9
C423	4030018010	S.CER ECJ0EC1H360J	T	39.9/35.3
C424	4030016930	S.CER ECJ0EB1A104K	T	38.9/32.2
C425	4030017460	S.CER ECJ0EB1E102K	B	134.8/66.1
C426	4030018860	S.CER ECJ0EB0J105K	B	110/12.1
C427	4030017460	S.CER ECJ0EB1E102K	B	109.1/10.4
C430	4030017570	S.CER ECJ0EC1H040B	T	78.2/44.8
J1	6510026770	S.CON AXK540147YG	T	124.5/9.7
J2	6510026770	S.CON AXK540147YG	T	101.5/9.7
J3	6510021301	S.CON 52365-1071	T	90.3/62.6
J5	6510023092	S.CON 20FLT-SM2-TB(LF)(SN)(M)	T	108.3/81.8
J7	6450000140	CON HSJ0807-01-010		
J10	6510023092	S.CON 20FLT-SM2-TB(LF)(SN)(M)	T	71/7
EP1	6910015600	S.BEA ACZ1005Y-241 (240)	B	39.8/8.1
EP2	6910015370	S.BEA ACZ1005Y-102-T	B	50.1/12.4
EP3	6910015370	S.BEA ACZ1005Y-102-T	T	82.6/37.1

[MAIN-A UNIT] (MDC compatible)

REF NO.	PARTS NO.	DESCRIPTION	M.	H/V LOCATION
IC1	1110005340	S.IC NJM12902V-TE1-#ZZZB	T	82.3/12.9
IC2	1110006221	S.IC AK2346P-E2/P	B	44.7/11.7
IC3	1140013200	S.IC CD4053BPWR	B	58.7/9.3
IC4	1130010100	S.IC LMX2352TMX/NOPB	T	82.9/46
IC5	1110003491	S.IC TA31136FNG(D,EL)	T	28/13.9
IC6	1190001350	S.IC M62364FP 600D	B	84.9/12.9
IC7	1110005340	S.IC NJM12902V-TE1-#ZZZB	T	108.5/43.7
IC8	1140013200	S.IC CD4053BPWR	B	58.7/16.1
IC9	1130012960	S.IC BU8872FS-E2	B	133.1/21.3
IC10	1190002051	S.IC SPM5001-TL-E	B	33.8/36.9
IC12	1190001340	S.IC M62334FP 600C	B	9.1/25.7
IC13	1110005771	S.IC S-80942CNMC-G9CT2G	B	126/44.8
IC14	1140014550	S.IC HD64F2506RFC26DV(EMPTY)	B	111.8/35.7
IC15	1150002073	IC RA60H1317M-125 [B]		
	1150002042	IC RA30H1317M-121 [F]		
	1150002042	IC RA30H1317M-121 [D]		
	1150002073	IC RA60H1317M-125 [G]		
	1150002042	IC RA30H1317M-121 [J]		
	1150002073	IC RA60H1317M-125 [K]		
	1150002073	IC RA60H1317M-125 [H]		
	1150002073	IC RA60H1317M-125 [I]		
IC16	1140014160	S.IC 24LC1025T-I/SM <SEI>	B	133.3/29
IC17	1110002751	S.IC TA75S01F(TE85R,F)	T	54.1/70.4
IC18	1180000970	S.IC AN78L05M-(E1)	B	113/65.3
IC19	1120002510	S.IC DS14C232TM S	T	104.7/70.5
IC20	1180001251	S.IC TA7808F(TE16L,Q) [B]	B	121.5/65.8
	1180001251	S.IC TA7808F(TE16L,Q) [F]		
	1180001252	S.IC TA7808F(TE16L1,NQ) [D]		
	1180001252	S.IC TA7808F(TE16L1,NQ) [G]		
	1180001251	S.IC TA7808F(TE16L,Q) [J]		
	1180001251	S.IC TA7808F(TE16L,Q) [K]		
	1180001251	S.IC TA7808F(TE16L,Q) [H]		
	1180001252	S.IC TA7808F(TE16L1,NQ) [I]		
IC21	1110003091	IC LA4425A-E		
IC22	1110002751	S.IC TA75S01F(TE85R,F)	B	135.5/54.4
IC23	1130006221	S.IC TC4W53FU(TE12L,F)	B	106.9/9.6
IC25	1110006230	S.IC NJM2711F-TE1-#ZZZB	B	26.1/6.6
Q1	1590003231	S.TRA UNR9113G0L	B	15.2/6
Q3	1530002851	S.TRA 2SC4116-BL(TE85R,F)	B	36.4/15.5
Q4	1590001650	S.TRA XP4601(TX)	B	92.8/12.4
Q5	1590003291	S.TRA UNR9213G0L	B	76.7/50
Q6	1530002851	S.TRA 2SC4116-BL(TE85R,F)	T	63.2/55.1
Q7	1560000541	S.FET 2SK880-Y(T5RICOM,F)	B	81.2/27.1
Q8	1530002851	S.TRA 2SC4116-BL(TE85R,F)	B	79.2/31.8
Q9	1530002851	S.TRA 2SC4116-BL(TE85R,F)	B	81.7/31.8
Q10	1560001360	S.FET 2SK3019 TL	B	57/31.6
Q12	1530002601	S.TRA 2SC4215-O(TE85R,F)	T	26.9/20
Q16	1590003291	S.TRA UNR9213G0L	T	113.2/47.6
Q17	1530002920	S.TRA 2SC4226-T1 R25	T	50.9/47.6
Q18	1530002920	S.TRA 2SC4226-T1 R25	T	61.6/42.6
Q19	1530002920	S.TRA 2SC4226-T1 R25	T	72.1/43
Q20	1590003231	S.TRA UNR9113G0L	B	33.9/25.2
Q22	1530003311	S.TRA 2SC5107-O(TE85R,F)	T	58.1/46.3
Q23	1590001400	S.TRA XP1214(TX)	B	55.7/40.9
Q24	1590003281	S.TRA UNR9211G0L	B	55.8/38.2
Q25	1530003311	S.TRA 2SC5107-O(TE85R,F)	B	65.9/49.5
Q26	1590001400	S.TRA XP1214(TX)	B	67.2/43.1
Q27	1590003231	S.TRA UNR9113G0L	T	124.7/52
Q28	1590003291	S.TRA UNR9213G0L	B	123.4/46.3
Q29	1530003311	S.TRA 2SC5107-O(TE85R,F)	B	53.5/51.2
Q30	1530000372	S.TRA 2SC3356-T1B R (R24)	B	65.5/66
Q31	1580000731	S.FET 3SK293(TE85L,F)	B	10.2/38.6
Q32	1560000841	S.FET 2SK1829(TE85R,F)	T	11/42.5
Q33	1530002851	S.TRA 2SC4116-BL(TE85R,F) [B]	T	47.5/69.4
	1530002851	S.TRA 2SC4116-BL(TE85R,F) [G]		
	1530002851	S.TRA 2SC4116-BL(TE85R,F) [K]		
	1530002851	S.TRA 2SC4116-BL(TE85R,F) [H]		
	1530002851	S.TRA 2SC4116-BL(TE85R,F) [I]		
Q34	1590003291	S.TRA UNR9213G0L	T	83/67.4
Q35	1520000460	S.TRA 2SB1132 T100 R	T	100.1/57.9
Q36	1590001190	S.TRA XP6501-(TX).AB	T	104.3/55.8
Q37	1540000550	S.TRA 2SD1664 T100Q	T	75.5/63.6
Q38	1510000920	S.TRA 2SA1577 T106 Q	T	39.3/21.3
Q39	1590003291	S.TRA UNR9213G0L	T	42.6/21.3
Q40	1590003291	S.TRA UNR9213G0L	T	104.1/51.9
Q41	1590001451	S.FET 2SJ144-GR (TE85R,F)	B	110.3/83.3
Q42	1590003291	S.TRA UNR9213G0L	B	132.1/45
Q43	1590000990	S.TRA DTC363EK T146	B	135.7/49
Q44	1590003291	S.TRA UNR9213G0L	T	108.5/21.6
Q45	1590003291	S.TRA UNR9213G0L	B	133.3/58.9
Q46	1590003291	S.TRA UNR9213G0L	T	117.9/84.4
Q47	1550000100	S.FET 2SJ377 (TE16L1,NQ)	B	131.3/71.5
Q48	1590003291	S.TRA UNR9213G0L	B	127.4/78
Q49	1530002851	S.TRA 2SC4116-BL(TE85R,F)	B	139.3/37.2
Q50	1530002601	S.TRA 2SC4215-O(TE85R,F)	T	40.6/39.2
Q51	1590003560	S.FET TPC6104 (TE85L,F)	B	133.6/63.4
Q52	1590003291	S.TRA UNR9213G0L	B	128.2/61.1
Q53	1590000430	S.TRA DTC144EUA T106	B	52.3/67.4
Q54	1590000430	S.TRA DTC144EUA T106	T	25.5/6.3
Q55	1560001360	S.FET 2SK3019 TL	T	75.5/20.9
Q57	1590003291	S.TRA UNR9213G0L	T	112/14.4
Q58	1530002851	S.TRA 2SC4116-BL(TE85R,F)	B	24.9/9.5
Q59	1590003291	S.TRA UNR9213G0L	B	96.6/8
Q60	1590003291	S.TRA UNR9213G0L	B	97.8/11.6
D1	1750001070	S.DIO DAN235ETL	T	10.4/15.7
D2	1750001070	S.DIO DAN235ETL	T	22.6/8.9
D3	1790001251	S.DIO MA2S1110GL	T	61.3/55
D4	1790001261	S.DIO MA2S077G0L	B	72.9/49.8
D5	1790001261	S.DIO MA2S077G0L	B	71.1/51.3
D6	1750001070	S.DIO DAN235ETL	T	30.6/20.8
D7	1160000140	S.DIO DAP222 TL	T	58.9/14

M.=Mounted side (T: Mounted on the Top side, B: Mounted on the Bottom side)
S.=Surface mount

[MAIN-A UNIT] (MDC compatible)

REF NO.	PARTS NO.	DESCRIPTION	M.	H/V LOCATION
D8	1720000791	S.VAR HVC321B1TRF-E	T	49.5/32.4
D9	1720000791	S.VAR HVC321B1TRF-E	T	52.7/32.4
D10	1720000791	S.VAR HVC321B1TRF-E	T	60.5/30
D11	1720000641	S.VAR 1SV284(TPH3,F)	T	52.7/33.6
D12	1720000641	S.VAR 1SV284(TPH3,F)	T	52.7/34.8
D13	1720000791	S.VAR HVC321B1TRF-E	T	63.8/28.6
D14	1720000791	S.VAR HVC321B1TRF-E	T	73.6/30.4
D15	1720000641	S.VAR 1SV284(TPH3,F)	T	63.8/31.3
D17	1720000791	S.VAR HVC321B1TRF-E	T	72.1/27.9
D18	1750000721	S.VAR HVC375BTRF-E	T	69.8/33.3
D19	1160000140	S.DIO DAP222 TL	B	120.5/17.8
D20	1720000471	S.VAR 1SV239(TPH3,F)	T	69.4/34.9
D21	1750001070	S.DIO DAN235ETL	T	36.3/38.3
D22	1750000520	S.DIO DAN222TL	T	124.7/54.5
D23	1790001261	S.DIO MA2S077G0L	T	125.6/39.2
D24	1790001261	S.DIO MA2S077G0L	B	50.7/53.2
D25	1790001261	S.DIO MA2S077G0L	B	49.3/50.8
D26	1750000711	S.VAR HVC350BTRF-E	B	17.7/36
D27	1750000711	S.VAR HVC350BTRF-E	B	16.2/36
D30	1750000721	S.VAR HVC375BTRF-E	B	8.6/44.7
D31	1790001251	S.DIO MA2S1110GL	T	8.5/43.7
D32	1750001080	S.DIO RB886G T2R	T	64.1/76.5
D33	1750001080	S.DIO RB886G T2R	T	65.8/75.8
D34	1750000721	S.VAR HVC375BTRF-E	B	8.6/47.4
D35	1790001621	S.DIO 1SV308(TPL3,F)	B	17.9/48.1
D37	1750000370	S.DIO DA221 TL	T	75.5/67.6
D38	1750000511	S.DIO UX9401F-STD/TR <INT> [F]	T	30/66
	1750000511	S.DIO UX9401F-STD/TR <INT> [D]		
	1750000511	S.DIO UX9401F-STD/TR <INT> [J]		
D39	1710001061	DIO L407CDB [B]		
	1710001061	DIO L407CDB [G]		
	1710001061	DIO L407CDB [K]		
	1710001061	DIO L407CDB [H]		
	1710001061	DIO L407CDB [I]		
D42	1750001360	S.DIO L709CER (9401)	T	34.6/58.7
D45	1750000520	S.DIO DAN222TL	T	91.8/57.5
D46	1750000520	S.DIO DAN222TL	T	89.6/57.5
D47	1790001211	S.DIO 1SS375-TL-E	B	29.2/63.8
D48	1750000520	S.DIO DAN222TL	B	93/61.5
D49	1790001211	S.DIO 1SS375-TL-E	B	6/52.8
D50	1750000370	S.DIO DA221 TL	B	97.2/65.8
D51	1790001211	S.DIO 1SS375-TL-E	B	3.9/79.7
D52	1750000520	S.DIO DAN222TL	B	132.5/41
D53	1790001251	S.DIO MA2S1110GL	B	133.3/47.3
D55	1750000370	S.DIO DA221 TL	B	108.8/57.4
D56	1750000370	S.DIO DA221 TL	T	108.8/60.6
D57	1750000370	S.DIO DA221 TL	B	95.1/65.8
D58	1750000520	S.DIO DAN222TL	T	94/57.5
D59	1750000520	S.DIO DAN222TL	B	104/80.4
D62	1790000700	DIO DSA3A1		
D63	1750000520	S.DIO DAN222TL	B	110.3/80.9
D65	1750000520	S.DIO DAN222TL	B	129.7/58.9
D66	1790001621	S.DIO 1SV308(TPL3,F)	T	33.9/38.8
D67	1790001621	S.DIO 1SV308(TPL3,F)	T	33.9/37.5
D68	1790001621	S.DIO 1SV308(TPL3,F)	T	29.9/23.2
D69	1790001621	S.DIO 1SV308(TPL3,F)	T	31.2/23.2
D70	1750000351	S.DIO 1SV252(TE85L,F)	T	73.6/75.5
D71	1730002411	S.ZEN MAZ8200GHL	T	118.3/86.3
D72	1750000520	S.DIO DAN222TL	T	87.4/57.5
D73	1750000520	S.DIO DAN222TL	B	93/64.5
FI1	2020001410	CER CFWLB450KGFA-B0 (CFWM450G)		
FI2	2020002470	S.CER CFWKA450KHFA001-R0	T	15.4/9.3
FI3	2030000500	S.MON DSF753SBF 46.35 MHz (FL-401)	T	24.7/28.4
FI4	2030000670	S.MON DSF753SBF 46.35 MHz (FL-420)	T	35.6/28.4
FI5	2040001440	S.LC NFE31PT152Z1E9L (NFM60R20T152)	B	94.5/77
FI6	2040001440	S.LC NFE31PT152Z1E9L (NFM60R20T152)	B	94.5/73.7
FI7	2040001440	S.LC NFE31PT152Z1E9L (NFM60R20T152) [B]	B	94.5/70.3
	2040001440	S.LC NFE31PT152Z1E9L (NFM60R20T152) [G]		
	2040001440	S.LC NFE31PT152Z1E9L (NFM60R20T152) [K]		
	2040001440	S.LC NFE31PT152Z1E9L (NFM60R20T152) [H]		
	2040001440	S.LC NFE31PT152Z1E9L (NFM60R20T152) [I]		
X1	6050012380	S.XTA CR-826 DSA535SD 15.3 MHz	T	84.2/34.7
X2	6050011730	S.XTA CR-765 SMD-49TA 3.6864 MHz <KDS>	T	48.3/11.6
X3	6070000300	S.DIS JTBM450CX24 <JJE>	T	37.1/10.3
X4	6050012320	S.XTA CR-818 SMD-49 4.194304 MHz <KDS>	T	139.1/21.9
X5	6050011720	S.XTA CR-764 SMD-49TB 19.6608 MHz <KDS>	T	120.5/44.3
L1	6200004660	S.COI MLF1608A 1R8K-T	T	82.7/54.3
L2	6200003540	S.COI MLF1608D R22K-T	B	34.4/14.7
L3	6200004480	S.COI MLF1608D R82K-T	B	29.7/16.2
L4	6200007911	S.COI ELJRF 18NJFB	B	75.9/48.3
L5	6200007120	S.COI ELJND 1R0J	T	49.4/30.8
L6	6200007120	S.COI ELJND 1R0J	T	52.7/30.8
L7	6200007120	S.COI ELJND 1R0J	T	60.5/28.4
L8	6200007170	S.COI MLF1608A 3R3K-T	T	74/27.5
L9	6200007170	S.COI MLF1608A 3R3K-T	T	69.8/32
L10	6200010600	S.COI C6342A-67NG-A	T	51.2/39.2
L11	6200003640	S.COI MLF1608E 100K-T	T	48.3/33.6
L12	6200009910	S.COI C6342A-88NG-A	T	61.6/35.5

[MAIN-A UNIT] (MDC compatible)

REF NO.	PARTS NO.	DESCRIPTION	M.	H/V LOCATION
L13	6200007120	S.COI ELJND 1R0J	T	63.8/27
L14	6200003640	S.COI MLF1608E 100K-T	T	60/31.4
L15	6200012450	S.COI 0.25-1.9-8TL 73N (COAT) <COMO>	T	73.3/35.9
L16	6200008090	S.COI LQW2BHN68NJ03L	T	69.5/28
L17	6200003640	S.COI MLF1608E 100K-T	T	73.7/32.6
L18	6130003000	S.COI #617DB-1714=P3	B	39/36.2
L19	6130003000	S.COI #617DB-1714=P3	B	34.5/42.6
L20	6200009181	S.COI ELJRE R10JFA	T	57.3/48.3
L21	6200007911	S.COI ELJRF 18NJFB	B	66.3/51.2
L22	6200005721	S.COI ELJRE 33NGFA	B	40.6/48.1
L23	6200005721	S.COI ELJRE 33NGFA	B	45.5/48.1
L24	6130003000	S.COI #617DB-1714=P3	B	27/36.2
L25	6200009151	S.COI ELJRE 82NJFA	B	54.2/53.4
L26	6200010720	S.COI C2520C-56NG-A	B	20.9/37
L27	6200009181	S.COI ELJRE R10JFA	B	66.5/69.4
L28	6200010720	S.COI C2520C-56NG-A	B	11.7/35.1
L29	6200009171	S.COI ELJRE 47NJFA	B	70.5/70.8
L30	6200009171	S.COI ELJRE 47NJFA	T	72.6/72.7
L31	6200011410	S.COI C2520C-82NG-A	B	7.8/41.5
L32	6200011410	S.COI C2520C-82NG-A	B	9.9/50.6
L33	6200010050	S.COI AS080547-47N	T	33.3/73.9
L34	6200007750	S.COI LQW2BHN56NJ03L	B	13.2/51.7
L35	6200006991	S.COI ELJRE 56NGFA	B	20.1/50.7
L36	6200010420	S.COI FHW1210HC 1R0JGT <JJE>	B	39.2/66
L37	6200010050	S.COI AS080547-47N	T	30/58.5
L38	6200010050	S.COI AS080547-47N	T	21.6/58
L39	6200010050	S.COI AS080547-47N	T	12.5/57.5
L40	6200010050	S.COI AS080547-47N	T	10.5/81
L41	6200002861	S.COI NLV25T-4R7J	T	122.3/54.4
L42	6200005011	S.COI NLV25T-100J	T	40.7/42.1
L43	6200010680	S.COI C2520C-R22G-A (0.22U)	T	42.1/34.9
L44	6200010740	S.COI C2520C-R27G-A	T	37.8/35.3
L45	6200003960	S.COI MLF1608A 1R0K-T	T	71.3/72.7
L46	6200005661	S.COI ELJRE 10NGFA	T	78.3/42.3
L47	6200004480	S.COI MLF1608D R82K-T	T	23.3/20.9
L48	6200007750	S.COI LQW2BHN56NJ03L	B	23.9/39.8
L49	6200009571	S.COI ELJRE R12GFA [B]	B	6.6/36.3
	6200009571	S.COI ELJRE R12GFA [G]		
	6200009571	S.COI ELJRE R12GFA [K]		
	6200009571	S.COI ELJRE R12GFA [H]		
	6200009571	S.COI ELJRE R12GFA [I]		
R1	7030005060	S.RES ERJ2GEJ 333 X (33K)	B	38.1/5.8
R2	7510001730	S.THE ERTJOEP 473J	T	90.4/35.6
R3	7030005050	S.RES ERJ2GEJ 103 X (10K)	T	79/11.9
R4	7030005700	S.RES ERJ2GEJ 274 X (270K)	B	88.5/18.9
R5	7030005090	S.RES ERJ2GEJ 104 X (100K)	T	90.4/34
R6	7030005160	S.RES ERJ2GEJ 105 X (1M)	T	84/19.4
R7	7030005230	S.RES ERJ2GEJ 334 X (330K)	T	84/17.5
R8	7410001130	S.ARR EXB28V102JX	T	86.1/52.4
R9	7030007570	S.RES ERJ2GEJ 122 X (1.2K)	B	34.3/11.6
R10	7030007060	S.RES ERJ2GEJ 684X (680K)	B	35.8/13.7
R11	7030010040	S.RES ERJ2GEJ-JPW	T	8.4/9.2
R12	7030004970	S.RES ERJ2GEJ 470 X (47)	T	31/17.2
R13	7030005600	S.RES ERJ2GEJ 273 X (27K)	T	8.8/15.9
R14	7030005210	S.RES ERJ2GEJ 822 X (8.2K)	T	7.5/7.4
R15	7030005070	S.RES ERJ2GEJ 683 X (68K)	B	93.3/14.4
R17	7030007570	S.RES ERJ2GEJ 122 X (1.2K)	B	93.3/15.3
R18	7030008300	S.RES ERJ2GEJ 184 X (180K)	B	79/11.8
R19	7030005230	S.RES ERJ2GEJ 334 X (330K)	T	89.3/9
R20	7030005090	S.RES ERJ2GEJ 104 X (100K)	T	85.6/8.3
R21	7030005070	S.RES ERJ2GEJ 683 X (68K)	T	86.6/8.3
R22	7030005050	S.RES ERJ2GEJ 103 X (10K)	B	38.1/7.5
R23	7030005050	S.RES ERJ2GEJ 103 X (10K)	B	38.1/9.2
R24	7030005060	S.RES ERJ2GEJ 333 X (33K)	B	37.2/10.5
R25	7030005120	S.RES ERJ2GEJ 102 X (1K)	B	100.9/51.4
R26	7030004980	S.RES ERJ2GEJ 101 X (100)	B	87.5/5.3
R27	7030007300	S.RES ERJ2GEJ 332 X (3.3K)	T	53.9/5.6
R28	7030010040	S.RES ERJ2GEJ-JPW	T	59.4/5.6
R29	7030005530	S.RES ERJ2GEJ 100 X (10)	T	116.4/14.5
R30	7030005170	S.RES ERJ2GEJ 474 X (470K)	B	37.2/9.2
R31	7030008410	S.RES ERJ2GEJ 392 X (3.9K)	B	36.3/9.2
R32	7030007340	S.RES ERJ2GEJ 153 X (15K)	B	37.2/7.5
R33	7030005160	S.RES ERJ2GEJ 105 X (1M)	T	80.7/8.4
R34	7030005040	S.RES ERJ2GEJ 472 X (4.7K)	T	80.7/7.2
R35	7030005120	S.RES ERJ2GEJ 102 X (1K)	T	77.6/9.5
R36	7030005030	S.RES ERJ2GEJ 152 X (1.5K)	B	27/14.7
R37	7030007300	S.RES ERJ2GEJ 332 X (3.3K)	B	15.2/8.6
R38	7030005210	S.RES ERJ2GEJ 822 X (8.2K)	T	22.9/6.2
R39	7030005600	S.RES ERJ2GEJ 273 X (27K)	T	24/9.1
R40	7030005170	S.RES ERJ2GEJ 474 X (470K)	T	25.9/10.6
R42	7030005090	S.RES ERJ2GEJ 104 X (100K)	B	94.8/11.7
R43	7030007300	S.RES ERJ2GEJ 332 X (3.3K)	B	94.8/10
R44	7030007340	S.RES ERJ2GEJ 153 X (15K)	B	90.7/11.9
R45	7030005220	S.RES ERJ2GEJ 223 X (22K)	B	92.8/10
R46	7030005040	S.RES ERJ2GEJ 472 X (4.7K)	T	92.1/14.1
R47	7030005050	S.RES ERJ2GEJ 103 X (10K)	T	92.1/13.1
R48	7030005060	S.RES ERJ2GEJ 333 X (33K)	B	50.9/8.6
R49	7030005160	S.RES ERJ2GEJ 105 X (1M)	B	49.7/13.7
R50	7030005090	S.RES ERJ2GEJ 104 X (100K)	B	49.7/11
R51	7030005290	S.RES ERJ2GEJ 682 X (6.8K)	T	52.4/7
R52	7030007340	S.RES ERJ2GEJ 153 X (15K)	T	59.1/12.5
R53	7030005000	S.RES ERJ2GEJ 471 X (470)	T	86.2/37.7
R54	7030010040	S.RES ERJ2GEJ-JPW	B	78.7/36.4
R55	7030005290	S.RES ERJ2GEJ 682 X (6.8K)	T	81.8/25.3
R56	7030005040	S.RES ERJ2GEJ 472 X (4.7K)	B	77.7/48.4
R57	7030005090	S.RES ERJ2GEJ 104 X (100K)	B	28.3/14.3
R58	7030005050	S.RES ERJ2GEJ 103 X (10K)	T	27.6/9
R59	7030005170	S.RES ERJ2GEJ 474 X (470K)	T	27.6/8.1
R60	7030005000	S.RES ERJ2GEJ 471 X (470)	T	30.9/10.2
R61	7030005040	S.RES ERJ2GEJ 472 X (4.7K)	T	28.8/8.5
R63	7030005220	S.RES ERJ2GEJ 223 X (22K)	B	92.8/8.3
R64	7030005220	S.RES ERJ2GEJ 223 X (22K)	B	92.8/6.5

M.=Mounted side (T: Mounted on the Top side, B: Mounted on the Bottom side)
S.=Surface mount

[MAIN-A UNIT] (MDC compatible)

REF NO.	PARTS NO.	DESCRIPTION	M.	H/V LOCATION
R65	7030005090	S.RES ERJ2GEJ 104 X (100K)	B	50.9/9.5
R66	7030005050	S.RES ERJ2GEJ 103 X (10K)	T	86.6/11.8
R67	7030005290	S.RES ERJ2GEJ 682 X (6.8K)	T	53.4/7
R68	7030007290	S.RES ERJ2GEJ 222 X (2.2K)	B	53.7/17.9
R69	7030010040	S.RES ERJ2GEJ-JPW	T	85.6/13.6
R71	7030005090	S.RES ERJ2GEJ 104 X (100K)	T	57.7/6.3
R72	7030007290	S.RES ERJ2GEJ 222 X (2.2K)	T	64.9/55.6
R73	7030005000	S.RES ERJ2GEJ 471 X (470)	B	83.2/26.9
R74	7030007300	S.RES ERJ2GEJ 332 X (3.3K)	B	81.8/25.3
R75	7030009140	S.RES ERJ2GEJ 272 X (2.7K)	B	79.2/34
R76	7030007340	S.RES ERJ2GEJ 153 X (15K)	B	80.3/29.1
R77	7030005580	S.RES ERJ2GEJ 560 X (56)	T	78.2/47.2
R78	7030005070	S.RES ERJ2GEJ 683 X (68K)	B	81.5/34
R79	7030005040	S.RES ERJ2GEJ 472 X (4.7K)	B	74.8/50
R80	7030005040	S.RES ERJ2GEJ 472 X (4.7K)	B	70/50.9
R81	7030005110	S.RES ERJ2GEJ 224 X (220K)	B	55.5/31.4
R82	7030005110	S.RES ERJ2GEJ 224 X (220K)	B	66.3/33.3
R83	7030008400	S.RES ERJ2GEJ 182 X (1.8K)	T	32.6/10.2
R85	7030005110	S.RES ERJ2GEJ 224 X (220K)	T	25.1/20.7
R87	7030007300	S.RES ERJ2GEJ 332 X (3.3K)	T	32.2/20.6
R88	7030005120	S.RES ERJ2GEJ 102 X (1K)	B	91.7/6.5
R90	7030005000	S.RES ERJ2GEJ 471 X (470)	B	89.4/18.9
R91	7030005700	S.RES ERJ2GEJ 274 X (270K)	T	85.6/11.8
R92	7030005090	S.RES ERJ2GEJ 104 X (100K)	T	87.3/13.4
R93	7030005310	S.RES ERJ2GEJ 124 X (120K)	T	83.9/8.2
R94	7030005080	S.RES ERJ2GEJ 823 X (82K)	T	108/34.7
R95	7030005720	S.RES ERJ2GEJ 563 X (56K)	T	108/33.8
R96	7030005240	S.RES ERJ2GEJ 473 X (47K)	B	63.7/15.5
R97	7030005060	S.RES ERJ2GEJ 333 X (33K)	B	53.3/16.6
R98	7030005030	S.RES ERJ2GEJ 152 X (1.5K)	B	62.1/19.4
R99	7030005240	S.RES ERJ2GEJ 473 X (47K)	B	60.2/19.4
R100	7030005030	S.RES ERJ2GEJ 152 X (1.5K)	B	77.9/34.4
R101	7030008280	S.RES ERJ2GEJ 271 X (270)	B	79.2/29.1
R102	7030005530	S.RES ERJ2GEJ 100 X (10)	T	23/22.9
R103	7030005600	S.RES ERJ2GEJ 273 X (27K)	B	29.9/23.8
R104	7030007280	S.RES ERJ2GEJ 331 X (330)	T	26.9/22.6
R105	7030005600	S.RES ERJ2GEJ 273 X (27K)	B	30.9/23.8
R106	7030007270	S.RES ERJ2GEJ 151 X (150)	T	34.3/22.5
R107	7030007340	S.RES ERJ2GEJ 153 X (15K)	B	129.7/52.3
R108	7030005240	S.RES ERJ2GEJ 473 X (47K)	B	82.3/18.9
R109	7030005700	S.RES ERJ2GEJ 274 X (270K)	B	81.3/18.9
R110	7030005050	S.RES ERJ2GEJ 103 X (10K)	T	78.4/20.2
R111	7030005050	S.RES ERJ2GEJ 103 X (10K)	T	95.9/28.3
R112	7030005700	S.RES ERJ2GEJ 274 X (270K)	T	80.8/20.1
R113	7030005240	S.RES ERJ2GEJ 473 X (47K)	B	57.9/19.4
R114	7030005090	S.RES ERJ2GEJ 104 X (100K)	B	53.7/13.3
R115	7030005090	S.RES ERJ2GEJ 104 X (100K)	T	114.4/18.4
R116	7030005090	S.RES ERJ2GEJ 104 X (100K)	B	85.3/7.3
R118	7030006610	S.RES ERJ2GEJ 394 X (390K)	T	89.5/11.7
R120	7030009280	S.RES ERJ2GEJ 391 X	T	30.3/34.3
R122	7030005600	S.RES ERJ2GEJ 273 X (27K)	T	32.3/35.2
R123	7030005600	S.RES ERJ2GEJ 273 X (27K)	T	33.5/35.2
R125	7030007270	S.RES ERJ2GEJ 151 X (150)	T	35/34
R127	7030005050	S.RES ERJ2GEJ 103 X (10K)	B	79.1/18.3
R128	7030008290	S.RES ERJ2GEJ 183 X (18K)	T	112.1/45.1
R129	7030005040	S.RES ERJ2GEJ 472 X (4.7K)	T	112.1/44.1
R130	7030005070	S.RES ERJ2GEJ 683 X (68K)	T	104.9/43.2
R131	7030005070	S.RES ERJ2GEJ 683 X (68K)	T	104.9/44.1
R132	7030004980	S.RES ERJ2GEJ 101 X (100)	T	114.4/17.5
R134	7030005160	S.RES ERJ2GEJ 105 X (1M)	T	128.9/26.3
R135	7030005160	S.RES ERJ2GEJ 105 X (1M)	T	128.9/25.3
R136	7030005160	S.RES ERJ2GEJ 105 X (1M)	T	128.9/24.2
R139	7410001140	S.ARR EXB28V104JX	T	130.6/20.6
R140	7030011000	S.RES RR0510P-392-D (3.9K)	T	48.1/47.2
R141	7030008340	S.RES RR0510P-182-D (1.8K)	T	50.8/45.4
R142	7030010040	S.RES ERJ2GEJ-JPW	T	49/47.2
R143	7030011000	S.RES RR0510P-392-D (3.9K)	T	58.7/42.2
R144	7030008340	S.RES RR0510P-182-D (1.8K)	T	61.7/40.4
R145	7030010040	S.RES ERJ2GEJ-JPW	T	59.6/42.2
R146	7030011000	S.RES RR0510P-392-D (3.9K)	T	71.8/45.8
R147	7030008340	S.RES RR0510P-182-D (1.8K)	T	70/41.9
R148	7030010040	S.RES ERJ2GEJ-JPW	T	71.8/44.9
R149	7030005310	S.RES ERJ2GEJ 124 X (120K)	T	69.1/36.3
R150	7030005240	S.RES ERJ2GEJ 473 X (47K)	T	89.8/15.5
R151	7030005060	S.RES ERJ2GEJ 333 X (33K)	T	91/16.1
R152	7030005090	S.RES ERJ2GEJ 104 X (100K)	T	88.9/16.4
R153	7030007300	S.RES ERJ2GEJ 332 X (3.3K)	T	39.9/32.2
R154	7030004970	S.RES ERJ2GEJ 470 X (47)	T	42.9/40.1
R155	7030005120	S.RES ERJ2GEJ 102 X (1K)	T	41.7/32.4
R156	7030004970	S.RES ERJ2GEJ 470 X (47)	T	42.5/41.3
R157	7030005090	S.RES ERJ2GEJ 104 X (100K)	B	33.7/23.6
R158	7030005240	S.RES ERJ2GEJ 473 X (47K)	T	112.1/42.3
R159	7030005240	S.RES ERJ2GEJ 473 X (47K)	T	112.1/40.5
R160	7030005240	S.RES ERJ2GEJ 473 X (47K)	T	113.8/38.7
R161	7030005070	S.RES ERJ2GEJ 683 X (68K)	T	104.9/46.8
R162	7030005240	S.RES ERJ2GEJ 473 X (47K)	T	128.2/14.4
R163	7030005240	S.RES ERJ2GEJ 473 X (47K)	T	128.7/16.3
R164	7030005240	S.RES ERJ2GEJ 473 X (47K)	T	129.4/14.4
R165	7030005230	S.RES ERJ2GEJ 334 X (330K)	T	128.7/17.8
R166	7030005230	S.RES ERJ2GEJ 334 X (330K)	T	128.7/18.7
R167	7030005230	S.RES ERJ2GEJ 334 X (330K)	T	129.8/16.2
R168	7030006581	S.RES ERA3YED 122V (1.2K)	T	53.6/47.5
R169	7030007230	S.RES ERA3YED 102V (1K)	T	63.8/42.6
R170	7030010390	S.RES ERA3YED 821V (820)	T	74.1/43.2
R171	7030005090	S.RES ERJ2GEJ 104 X (100K)	T	56.3/46.7
R172	7030008280	S.RES ERJ2GEJ 271 X (270)	B	36.4/46.4
R173	7030007270	S.RES ERJ2GEJ 151 X (150)	B	39/31.2
R174	7030004980	S.RES ERJ2GEJ 101 X (100)	B	34.6/38.7
R175	7030004980	S.RES ERJ2GEJ 101 X (100)	B	33/38.7
R176	7030005590	S.RES ERJ2GEJ 680 X (68)	B	31.3/37.4
R177	7030005590	S.RES ERJ2GEJ 680 X (68)	B	31.3/34.9
R178	7030005240	S.RES ERJ2GEJ 473 X (47K)	T	113.8/37.8
R179	7030008300	S.RES ERJ2GEJ 184 X (180K)	T	117.6/34.6
R180	7030005720	S.RES ERJ2GEJ 563 X (56K)	T	118.3/35.3
R181	7030005220	S.RES ERJ2GEJ 223 X (22K)	T	119/36

[MAIN-A UNIT] (MDC compatible)

REF NO.	PARTS NO.	DESCRIPTION	M.	H/V LOCATION
R182	7030005120	S.RES ERJ2GEJ 102 X (1K)	T	116.9/33.9
R183	7030005070	S.RES ERJ2GEJ 683 X (68K)	T	103.1/46.8
R184	7030005220	S.RES ERJ2GEJ 223 X (22K)	T	113.8/36.9
R185	7030005070	S.RES ERJ2GEJ 683 X (68K)	B	102.3/45.6
R186	7030005160	S.RES ERJ2GEJ 105 X (1M)	T	81.8/18.9
R187	7030005060	S.RES ERJ2GEJ 333 X (33K)	T	80.6/17.5
R188	7030005090	S.RES ERJ2GEJ 104 X (100K)	T	78.5/14.9
R189	7030005720	S.RES ERJ2GEJ 563 X (56K)	T	78.5/15.8
R190	7030005080	S.RES ERJ2GEJ 823 X (82K)	T	80.6/18.4
R191	7030004980	S.RES ERJ2GEJ 101 X (100)	T	60.5/47
R192	7030004980	S.RES ERJ2GEJ 101 X (100)	B	66.3/53.2
R193	7030005050	S.RES ERJ2GEJ 103 X (10K)	B	66.3/45.2
R194	7030005110	S.RES ERJ2GEJ 224 X (220K)	B	62.7/50.8
R195	7030009320	S.RES ERJ2GEJ 4R7 X (4.7)	B	55.8/50.3
R196	7030005120	S.RES ERJ2GEJ 102 X (1K)	B	65.2/42.8
R197	7030005050	S.RES ERJ2GEJ 103 X (10K)	B	64.7/44.5
R198	7030010090	S.RES ERJ2GEJ 180 X (18)	B	36/47.6
R199	7030008280	S.RES ERJ2GEJ 271 X (270)	B	37.3/47.6
R200	7030005050	S.RES ERJ2GEJ 103 X (10K)	B	8.4/20.6
R201	7410001130	S.ARR EXB28V102JX	B	117/51.7
R202	7030005090	S.RES ERJ2GEJ 104 X (100K)	B	122.5/44.8
R203	7030005120	S.RES ERJ2GEJ 102 X (1K)	B	127.4/47.3
R204	7410000750	S.ARR EXB-V4V 104JV (100K)	B	129.6/42.7
R205	7030008010	S.RES ERJ2GEJ 123 X (12K)	T	127.5/40.1
R206	7030005120	S.RES ERJ2GEJ 102 X (1K)	B	127/39.5
R207	7030005050	S.RES ERJ2GEJ 103 X (10K)	T	120.9/37.5
R208	7030005050	S.RES ERJ2GEJ 103 X (10K)	T	121.6/38.2
R209	7410001130	S.ARR EXB28V102JX	B	125.8/40.8
R210	7030008010	S.RES ERJ2GEJ 123 X (12K)	T	124.2/38.4
R211	7030008010	S.RES ERJ2GEJ 123 X (12K)	T	125.9/41.1
R212	7030005160	S.RES ERJ2GEJ 105 X (1M)	T	122.1/41.1
R213	7030005090	S.RES ERJ2GEJ 104 X (100K)	B	55.3/51.8
R214	7030004980	S.RES ERJ2GEJ 101 X (100)	B	56.4/54
R215	7030005050	S.RES ERJ2GEJ 103 X (10K)	B	63.5/61.3
R216	7030005590	S.RES ERJ2GEJ 680 X (68)	B	61.9/62.3
R218	7030010040	S.RES ERJ2GEJ-JPW	B	56.4/51.8
R219	7030005050	S.RES ERJ2GEJ 103 X (10K)	B	46/49.8
R220	7030005040	S.RES ERJ2GEJ 472 X (4.7K)	B	49.3/52
R221	7030005050	S.RES ERJ2GEJ 103 X (10K)	B	44.4/49.8
R222	7030005090	S.RES ERJ2GEJ 104 X (100K)	B	17.7/33.9
R223	7030005090	S.RES ERJ2GEJ 104 X (100K)	B	16.2/33.9
R224	7030005050	S.RES ERJ2GEJ 103 X (10K)	B	15.7/32.7
R225	7030005000	S.RES ERJ2GEJ 471 X (470)	B	8/19.2
R226	7030004980	S.RES ERJ2GEJ 101 X (100)	T	109.7/53.5
R227	7030005090	S.RES ERJ2GEJ 104 X (100K)	B	107.1/49.3
R228	7410001140	S.ARR EXB28V104JX	T	103.3/49
R230	7030005050	S.RES ERJ2GEJ 103 X (10K)	B	124.7/42.7
R232	7030005530	S.RES ERJ2GEJ 100 X (10)	T	120.4/41.1
R233	7410000750	S.ARR EXB-V4V 104JV (100K)	T	130/34.7
R234	7410001130	S.ARR EXB28V102JX	B	129.4/34.4
R236	7030009530	S.RES ERJ2GEJ 270 X (27)	B	63.9/71.5
R237	7030005040	S.RES ERJ2GEJ 472 X (4.7K)	B	65.3/69.7
R238	7030008010	S.RES ERJ2GEJ 123 X (12K)	B	61.9/65.1
R240	7030005570	S.RES ERJ2GEJ 820 X (82)	B	62.4/67.4
R241	7030004980	S.RES ERJ2GEJ 101 X (100)	B	58.5/66
R242	7030004970	S.RES ERJ2GEJ 470 X (47)	T	12/33.1
R243	7030009320	S.RES ERJ2GEJ 4R7 X (4.7)	T	10/36
R244	7030005050	S.RES ERJ2GEJ 103 X (10K) [B]	B	15.1/36.3
	7030004980	S.RES ERJ2GEJ 101 X (100) [F]		
	7030004980	S.RES ERJ2GEJ 101 X (100) [D]		
	7030005050	S.RES ERJ2GEJ 103 X (10K) [G]		
	7030004980	S.RES ERJ2GEJ 101 X (100) [J]		
	7030005050	S.RES ERJ2GEJ 103 X (10K) [K]		
	7030005050	S.RES ERJ2GEJ 103 X (10K) [H]		
	7030005050	S.RES ERJ2GEJ 103 X (10K) [I]		
R245	7030005530	S.RES ERJ2GEJ 100 X (10)	B	11.9/39.9
R246	7030005090	S.RES ERJ2GEJ 104 X (100K)	B	7.5/38.6
R247	7030004990	S.RES ERJ2GEJ 221 X (220)	B	7.7/36.3
R248	7410001130	S.ARR EXB28V102JX	B	103.9/47.9
R249	7410001130	S.ARR EXB28V102JX	B	123.9/27.6
R250	7410001130	S.ARR EXB28V102JX	B	122.1/25.7
R251	7410001140	S.ARR EXB28V104JX	T	124.7/28.7
R252	7410001140	S.ARR EXB28V104JX	T	122.1/25.7
R253	7030008290	S.RES ERJ2GEJ 183 X (18K)	T	9.5/40.5
R254	7030005050	S.RES ERJ2GEJ 103 X (10K)	T	7.4/42.2
R255	7030005310	S.RES ERJ2GEJ 124 X (120K)	B	6.6/38.6
R257	7030008400	S.RES ERJ2GEJ 182 X (1.8K)	T	9/42.2
R258	7030005170	S.RES ERJ2GEJ 474 X (470K)	T	11/44.5
R259	7030005090	S.RES ERJ2GEJ 104 X (100K)	B	6/45.1
R260	7030005090	S.RES ERJ2GEJ 104 X (100K)	B	6/47
R261	7410001130	S.ARR EXB28V102JX	B	99.7/43.5
R262	7410001130	S.ARR EXB28V102JX	T	100.2/37.4
R263	7410001130	S.ARR EXB28V102JX	B	97/40.7
R264	7410001140	S.ARR EXB28V104JX	T	103.8/37
R265	7030005050	S.RES ERJ2GEJ 103 X (10K)	T	103.8/39.2
R266	7410001130	S.ARR EXB28V102JX	B	120.1/23.5
R267	7410001130	S.ARR EXB28V102JX	B	118.3/21.7
R268	7410001130	S.ARR EXB28V102JX	B	116.5/19.9
R269	7030005090	S.RES ERJ2GEJ 104 X (100K)	T	119.4/20.8
R271	7030004980	S.RES ERJ2GEJ 101 X (100)	T	77.6/78.5
R272	7030007280	S.RES ERJ2GEJ 331 X (330)	T	61/76.5
R273	7030005050	S.RES ERJ2GEJ 103 X (10K) [F]	T	62.3/76.1
	7030005050	S.RES ERJ2GEJ 103 X (10K) [D]		
	7030005050	S.RES ERJ2GEJ 103 X (10K) [J]		
R274	7030004980	S.RES ERJ2GEJ 101 X (100)	T	56.7/69.3
R275	7030005030	S.RES ERJ2GEJ 152 X (1.5K)	T	64.8/73.8
R276	7030007300	S.RES ERJ2GEJ 332 X (3.3K) [B]	T	65.8/73.8
	7030005040	S.RES ERJ2GEJ 472 X (4.7K) [F]		
	7030005040	S.RES ERJ2GEJ 472 X (4.7K) [D]		
	7030007300	S.RES ERJ2GEJ 332 X (3.3K) [G]		
	7030005040	S.RES ERJ2GEJ 472 X (4.7K) [J]		
	7030007300	S.RES ERJ2GEJ 332 X (3.3K) [K]		
	7030007300	S.RES ERJ2GEJ 332 X (3.3K) [H]		
	7030007300	S.RES ERJ2GEJ 332 X (3.3K) [I]		
R277	7030005050	S.RES ERJ2GEJ 103 X (10K)	B	4.8/45.6

M.=Mounted side (T: Mounted on the Top side, B: Mounted on the Bottom side)
S.=Surface mount

[MAIN-A UNIT] (MDC compatible)

REF NO.	PARTS NO.	DESCRIPTION		M.	H/V LOCATION
R278	7030005050	S.RES ERJ2GEJ 103 X (10K)		T	132.2/29.9
R279	7030005090	S.RES ERJ2GEJ 104 X (100K)		T	131.3/29.9
R280	7410001130	S.ARR EXB28V102JX		B	95.2/38.9
R281	7030005090	S.RES ERJ2GEJ 104 X (100K)		T	93.7/48.8
R282	7410000750	S.ARR EXB-V4V 104JV (100K)		T	97.2/45.3
R283	7410001130	S.ARR EXB28V102JX		T	103.1/21.7
R284	7030005120	S.RES ERJ2GEJ 102 X (1K)		T	111.2/25.1
R285	7410001130	S.ARR EXB28V102JX		B	107.1/19.9
R286	7410001140	S.ARR EXB28V104JX		T	121.7/22.2
R287	7030005580	S.RES ERJ2GEJ 560 X (56)	[B]	T	55.7/72.6
	7030004990	S.RES ERJ2GEJ 221 X (220)	[F]		
	7030004990	S.RES ERJ2GEJ 221 X (220)	[D]		
	7030005580	S.RES ERJ2GEJ 560 X (56)	[G]		
	7030004990	S.RES ERJ2GEJ 221 X (220)	[J]		
	7030005580	S.RES ERJ2GEJ 560 X (56)	[K]		
	7030005580	S.RES ERJ2GEJ 560 X (56)	[H]		
	7030005580	S.RES ERJ2GEJ 560 X (56)	[I]		
R288	7030005100	S.RES ERJ2GEJ 154 X (150K)		T	54.1/68.2
R289	7030005170	S.RES ERJ2GEJ 474 X (470K)	[B]	B	38/63.7
	7030005170	S.RES ERJ2GEJ 474 X (470K)	[G]		
	7030005170	S.RES ERJ2GEJ 474 X (470K)	[K]		
	7030005170	S.RES ERJ2GEJ 474 X (470K)	[H]		
	7030005170	S.RES ERJ2GEJ 474 X (470K)	[I]		
R290	7520000260	S.POS PRF18BB471QB1RB	[B]	T	33.9/63
	7520000260	S.POS PRF18BB471QB1RB	[G]		
	7520000261	S.POS PRF18BB471QB5RB	[K]		
	7520000260	S.POS PRF18BB471QB1RB	[H]		
	7520000260	S.POS PRF18BB471QB1RB	[I]		
R291	7030005120	S.RES ERJ2GEJ 102 X (1K)		T	109.2/24.5
R292	7030006070	S.RES ERJ12YJ101U (100)		B	43.6/66.1
R293	7030005120	S.RES ERJ2GEJ 102 X (1K)		T	50.6/70.5
R294	7030005050	S.RES ERJ2GEJ 103 X (10K)		T	51.7/68.2
R295	7030008290	S.RES ERJ2GEJ 183 X (18K)		T	50.6/71.4
R296	7030005040	S.RES ERJ2GEJ 472 X (4.7K)		T	53.8/64.2
R297	7030008010	S.RES ERJ2GEJ 123 X (12K)		T	50.5/68.6
R298	7030005090	S.RES ERJ2GEJ 104 X (100K)		T	45.6/69.9
R300	7030005050	S.RES ERJ2GEJ 103 X (10K)		B	99.9/59.6
R301	7030007290	S.RES ERJ2GEJ 222 X (2.2K)		T	106.2/55.6
R302	7030000480	S.RES MCR10EZHJ 6.8K (682)		T	79/64.4
R303	7030000480	S.RES MCR10EZHJ 6.8K (682)		T	80.9/64.4
R304	7030000440	S.RES MCR10EZHJ 3.3K (332)		T	82.8/64.4
R305	7030005050	S.RES ERJ2GEJ 103 X (10K)		T	40.3/19.4
R306	7030005040	S.RES ERJ2GEJ 472 X (4.7K)		T	41/21.7
R307	7030005050	S.RES ERJ2GEJ 103 X (10K)		B	27/63
R309	7030005070	S.RES ERJ2GEJ 683 X (68K)		T	89.9/7.2
R310	7030004980	S.RES ERJ2GEJ 101 X (100)		B	109.3/62.8
R311	7030000220	S.RES MCR10EZHJ 47 (470)		B	15/76.9
R312	7030005700	S.RES ERJ2GEJ 274 X (270K)		B	31.5/62.4
R313	7030003370	S.RES ERJ3GEYJ 271 V (270)		B	8.6/54
R314	7030005600	S.RES ERJ2GEJ 273 X (27K)		B	3/53
R315	7030000220	S.RES MCR10EZHJ 47 (470)		B	3.5/57.4
R316	7030005170	S.RES ERJ2GEJ 474 X (470K)		T	90.8/11.3
R317	7030005160	S.RES ERJ2GEJ 105 X (1M)		B	108.3/83.7
R318	7030005160	S.RES ERJ2GEJ 105 X (1M)		B	112.5/82.7
R319	7030005120	S.RES ERJ2GEJ 102 X (1K)		B	112.1/81.5
R320	7030005160	S.RES ERJ2GEJ 105 X (1M)		B	107.2/82.4
R321	7030004970	S.RES ERJ2GEJ 470 X (47)		B	108.4/82
R322	7030005600	S.RES ERJ2GEJ 273 X (27K)		B	2.1/79.2
R323	7030003370	S.RES ERJ3GEYJ 271 V (270)		B	6.3/78.7
R324	7030000620	S.RES MCR10EZHJ 100 K (104)		B	5.6/85.5
R325	7030005050	S.RES ERJ2GEJ 103 X (10K)		B	130.5/45.2
R326	7030005090	S.RES ERJ2GEJ 104 X (100K)		B	131.8/51.7
R327	7030005120	S.RES ERJ2GEJ 102 X (1K)		B	131.1/54.2
R328	7030005090	S.RES ERJ2GEJ 104 X (100K)		B	134.2/51.7
R332	7030005090	S.RES ERJ2GEJ 104 X (100K)		T	109.6/27.9
R333	7030005120	S.RES ERJ2GEJ 102 X (1K)		T	109.6/26.9
R334	7520000270	S.POS PRG21BC4R7MM1RA		T	101.4/79.7
R335	7030005050	S.RES ERJ2GEJ 103 X (10K)		T	101.8/83.9
R336	7030005120	S.RES ERJ2GEJ 102 X (1K)		T	111.3/78.5
R337	7410001130	S.ARR EXB28V102JX		T	104.6/75.9
R338	7030005651	S.RES ERA3YKD 304V (300K)		T	113.6/54.3
R339	7030005871	S.RES ERA3YKD 104V (100K)		T	113.6/52.9
R340	7030003560	S.RES ERJ3GEYJ 103 V (10K)		T	136.3/65.7
R341	7030003560	S.RES ERJ3GEYJ 103 V (10K)		B	130.7/85.9
R342	7030005090	S.RES ERJ2GEJ 104 X (100K)		B	135.4/52.2
R343	7030007290	S.RES ERJ2GEJ 222 X (2.2K)		B	138.2/49.4
R344	7030008270	S.RES RR0510P-104-D (100K)		B	133.3/54.6
R345	7030008270	S.RES RR0510P-104-D (100K)		B	133.3/56.3
R346	7030008410	S.RES ERJ2GEJ 392 X (3.9K)		B	137/52.2
R347	7030005050	S.RES ERJ2GEJ 103 X (10K)		B	137.8/53.7
R348	7030005700	S.RES ERJ2GEJ 274 X (270K)		B	131/75.5
R349	7030005090	S.RES ERJ2GEJ 104 X (100K)		B	129.8/76.5
R350	7030005120	S.RES ERJ2GEJ 102 X (1K)		B	139.1/47.8
R351	7030004980	S.RES ERJ2GEJ 101 X (100)		B	136.3/38.1
R352	7030008300	S.RES ERJ2GEJ 184 X (180K)		B	139.7/39
R353	7030005230	S.RES ERJ2GEJ 334 X (330K)		B	138.2/47.8
R354	7030010040	S.RES ERJ2GEJ-JPW		T	140.4/36
R355	7030008280	S.RES ERJ2GEJ 271 X (270)		B	139.7/34.3
R356	7540000290	ABS ERZV10D220			
R359	7030005090	S.RES ERJ2GEJ 104 X (100K)		B	114.8/82.9
R360	7030005090	S.RES ERJ2GEJ 104 X (100K)		T	80.6/5.3
R361	7030005600	S.RES ERJ2GEJ 273 X (27K)		T	78.4/5.3
R362	7030005050	S.RES ERJ2GEJ 103 X (10K)		T	124.8/50.2
R363	7030005120	S.RES ERJ2GEJ 102 X (1K)		T	42.9/38.3
R364	7030009140	S.RES ERJ2GEJ 272 X (2.7K)		T	42.9/37.4
R365	7030004970	S.RES ERJ2GEJ 470 X (47)		T	38.3/37.9
R366	7030005090	S.RES ERJ2GEJ 104 X (100K)		B	131.4/63.4
R367	7030005040	S.RES ERJ2GEJ 472 X (4.7K)	[B]	B	130.1/63
	7030005040	S.RES ERJ2GEJ 472 X (4.7K)	[F]		
	7030005040	S.RES ERJ2GEJ 472 X (4.7K)	[D]		
	7030005040	S.RES ERJ2GEJ 472 X (4.7K)	[G]		
	7030005040	S.RES ERJ2GEJ 472 X (4.7K)	[J]		
	7030005040	S.RES ERJ2GEJ 472 X (4.7K)	[K]		
	7030005040	S.RES ERJ2GEJ 472 X (4.7K)	[H]		
	7030005000	S.RES ERJ2GEJ 471 X (470)	[I]		

[MAIN-A UNIT] (MDC compatible)

REF NO.	PARTS NO.	DESCRIPTION	M.	H/V LOCATION
R368	7030005050	S.RES ERJ2GEJ 103 X (10K)	T	78.3/7.6
R370	7030005010	S.RES ERJ2GEJ 681 X (680)	T	71.2/70.4
R371	7030005050	S.RES ERJ2GEJ 103 X (10K)	T	119.5/84.6
R372	7030005040	S.RES ERJ2GEJ 472 X (4.7K)	T	25.9/8.1
R373	7030005040	S.RES ERJ2GEJ 472 X (4.7K)	T	74/21.6
R375	7030005030	S.RES ERJ2GEJ 152 X (1.5K)	T	27.6/5.3
R376	7030005160	S.RES ERJ2GEJ 105 X (1M)	B	109.1/12.1
R377	7030005160	S.RES ERJ2GEJ 105 X (1M)	B	110.9/12.1
R378	7410001140	S.ARR EXB28V104JX	B	100.7/18.3
R379	7030005090	S.RES ERJ2GEJ 104 X (100K)	T	111.6/23.8
R386	7030005120	S.RES ERJ2GEJ 102 X (1K)	T	105.8/85.1
R387	7030005120	S.RES ERJ2GEJ 102 X (1K)	T	107.8/85.1
R389	7030005090	S.RES ERJ2GEJ 104 X (100K)	T	110.4/10.7
R390	7030008300	S.RES ERJ2GEJ 184 X (180K)	B	23/10.5
R391	7030005120	S.RES ERJ2GEJ 102 X (1K)	B	23.9/7.3
R392	7030008400	S.RES ERJ2GEJ 182 X (1.8K)	B	29.2/5.6
R393	7030004980	S.RES ERJ2GEJ 101 X (100)	B	28.3/7.3
R394	7030004980	S.RES ERJ2GEJ 101 X (100)	B	23/8.9
R395	7030005290	S.RES ERJ2GEJ 682 X (6.8K)	B	22.1/7.3
R396	7030009290	S.RES ERJ2GEJ 562 X (5.6K)	B	22.1/5.6
R397	7030005120	S.RES ERJ2GEJ 102 X (1K)	B	79.8/46.1
R398	7030005120	S.RES ERJ2GEJ 102 X (1K)	T	79.3/41.3
R399	7030005050	S.RES ERJ2GEJ 103 X (10K)	B	95.8/10
R400	7030005030	S.RES ERJ2GEJ 152 X (1.5K)	B	23/5.6
C1	4030017420	S.CER ECJ0EC1H470J	T	88.9/54.3
C2	4030017420	S.CER ECJ0EC1H470J	T	89.9/54.3
C3	4030017420	S.CER ECJ0EC1H470J	T	41.5/15.4
C4	4030017420	S.CER ECJ0EC1H470J	B	50/15
C5	4030017460	S.CER ECJ0EB1E102K	T	89.4/34
C6	4550007080	S.TAN TEESVA 1C 106M8R	T	80.8/55.1
C7	4030017420	S.CER ECJ0EC1H470J	T	84/18.4
C8	4030017420	S.CER ECJ0EC1H470J	T	89.9/52
C9	4030016930	S.CER ECJ0EB1A104K	T	88.9/52
C10	4030016930	S.CER ECJ0EB1A104K	T	80.6/50.7
C11	4030016930	S.CER ECJ0EB1A104K	T	10.9/18.8
C12	4030016930	S.CER ECJ0EB1A104K	T	8.5/7.4
C13	4030016930	S.CER ECJ0EB1A104K	T	85.6/10
C14	4030016930	S.CER ECJ0EB1A104K	T	86.6/10
C15	4030017460	S.CER ECJ0EB1E102K	T	41.5/7.7
C16	4550000460	S.TAN TEESVA 1C 105M8R	T	42.7/6.2
C17	4550000460	S.TAN TEESVA 1C 105M8R	B	42.7/6.2
C18	4030017420	S.CER ECJ0EC1H470J	T	41.5/14.5
C19	4030017420	S.CER ECJ0EC1H470J	B	50/15.9
C20	4030016970	S.CER ECJ0EB1C223K	B	100.9/52.3
C21	4030017420	S.CER ECJ0EC1H470J	T	41.5/13.5
C22	4030017420	S.CER ECJ0EC1H470J	T	41.5/12.6
C23	4030016930	S.CER ECJ0EB1A104K	T	51.8/5.6
C24	4030017660	S.CER ECJ0EC1H330J	B	39.8/9.8
C25	4030017420	S.CER ECJ0EC1H470J	T	61.4/6
C26	4030016930	S.CER ECJ0EB1A104K	B	37.2/5.8
C27	4030018240	S.CER ECJ0EB1E562K	B	36.3/7.5
C28	4030016790	S.CER ECJ0EB1C103K	T	79.3/7.6
C29	4030017460	S.CER ECJ0EB1E102K	T	79/13.6
C30	4030016930	S.CER ECJ0EB1A104K	T	78.1/13.6
C31	4030017460	S.CER ECJ0EB1E102K	T	80.6/51.7
C32	4030017500	S.CER ECJ0EC1H560J	B	33.3/15.9
C33	4030016930	S.CER ECJ0EB1A104K	B	34.8/12.8
C34	4030017570	S.CER ECJ0EC1H040B	B	32.1/15.4
C35	4030017590	S.CER ECJ0EC1H070C	B	30.9/15.9
C36	4030016930	S.CER ECJ0EB1A104K	T	22.4/14.9
C37	4030017360	S.CER ECJ0EC1H030B	B	28.3/15.4
C38	4030016930	S.CER ECJ0EB1A104K	T	22/6.2
C39	4030016930	S.CER ECJ0EB1A104K	B	13.6/6.2
C40	4030016930	S.CER ECJ0EB1A104K	T	23.8/6.2
C41	4030016930	S.CER ECJ0EB1A104K	T	22/12.5
C42	4030016930	S.CER ECJ0EB1A104K	T	23/12.5
C43	4030017680	S.CER ECJ0EC1H820J	T	26.4/9.4
C44	4030017680	S.CER ECJ0EC1H820J	T	25.5/9.4
C45	4030017790	S.CER ECJ0EB1E682K	B	91.7/10
C46	4030016930	S.CER ECJ0EB1A104K	B	93.8/10
C47	4030016970	S.CER ECJ0EB1C223K	T	92.1/15.1
C48	4030017710	S.CER ECJ0EC1H181J	B	49.7/9.1
C49	4550007080	S.TAN TEESVA 1C 106M8R	T	52.1/15.4
C50	4030017460	S.CER ECJ0EB1E102K	T	54.3/12
C51	4030017400	S.CER ECJ0EC1H220J	T	47.8/19
C52	4030017400	S.CER ECJ0EC1H220J	T	44.7/7.8
C53	4030017900	S.CER ECJ0EB1C123K	T	59.1/10.6
C54	4030018080	S.CER ECJ0EB1H182K	T	59.1/11.5
C55	4030016790	S.CER ECJ0EB1C103K	T	64.5/57
C56	4030017620	S.CER ECJ0EC1H100C	T	87.7/35.5
C57	4030016930	S.CER ECJ0EB1A104K	T	80.1/36.7
C58	4030017430	S.CER ECJ0EC1H101J	T	85.2/38.6
C59	4030017460	S.CER ECJ0EB1E102K	T	81.8/24.3
C60	4030017420	S.CER ECJ0EC1H470J	T	82.9/41.5
C63	4030017620	S.CER ECJ0EC1H100C	T	84/39.1
C64	4030017780	S.CER ECJ0EB1E472K	T	81.3/41.3
C65	4030017460	S.CER ECJ0EB1E102K	T	27.6/10.6
C66	4550006050	S.TAN TEESVA 0J 106M8R	T	31.1/6.8
C67	4030017460	S.CER ECJ0EB1E102K	T	27.6/7.1
C68	4030017460	S.CER ECJ0EB1E102K	T	30.5/9
C69	4030017460	S.CER ECJ0EB1E102K	T	32.6/15.4
C70	4030017420	S.CER ECJ0EC1H470J	B	28.3/13.4
C71	4030016940	S.CER ECJ0EB1A393K	B	91.7/8.3
C72	4030018860	S.CER ECJ0EB0J105K	B	50.7/11
C73	4030017750	S.CER ECJ0EB1E122K	B	51.3/16.6
C74	4030016930	S.CER ECJ0EB1A104K	B	52.3/16.6
C75	4030016930	S.CER ECJ0EB1A104K	B	56.2/12.6
C77	4030017460	S.CER ECJ0EB1E102K	B	54.2/16.6
C78	4030017460	S.CER ECJ0EB1E102K	B	53.7/9
C79	4550007080	S.TAN TEESVA 1C 106M8R	T	66.5/55.3
C80	4030017780	S.CER ECJ0EB1E472K	B	79.2/35
C81	4550000460	S.TAN TEESVA 1C 105M8R	B	82.2/36.4
C82	4030017460	S.CER ECJ0EB1E102K	B	84.1/26.9

M.=Mounted side (T: Mounted on the Top side, B: Mounted on the Bottom side)
S.=Surface mount

[MAIN-A UNIT] (MDC compatible)

REF NO.	PARTS NO.	DESCRIPTION	M.	H/V LOCATION
C83	4550000460	S.TAN TEESVA 1C 105M8R	B	84/32.5
C84	4030017460	S.CER ECJ0EB1E102K	T	78.2/48.8
C85	4030017380	S.CER ECJ0EC1H050B	B	77.1/47.2
C86	4030017350	S.CER ECJ0EC1H020B	B	74.8/48.3
C87	4030017580	S.CER ECJ0EC1H060C	B	73.7/48.3
C88	4030017380	S.CER ECJ0EC1H050B	B	72.4/48.6
C89	4030017580	S.CER ECJ0EC1H060C	B	71.1/49.1
C90	4030017350	S.CER ECJ0EC1H020B	B	70/49.1
C91	4030016790	S.CER ECJ0EB1C103K	T	27.3/17.3
C92	4030017460	S.CER ECJ0EB1E102K	T	25.1/22.4
C93	4030017680	S.CER ECJ0EC1H820J	T	32.6/12.6
C94	4030017460	S.CER ECJ0EB1E102K	B	27.8/12.5
C95	4030016790	S.CER ECJ0EB1C103K	T	28.9/20.1
C98	4030016930	S.CER ECJ0EB1A104K	B	89.3/7.3
C99	4030016930	S.CER ECJ0EB1A104K	B	90.7/14.8
C100	4030016930	S.CER ECJ0EB1A104K	T	87.3/14.3
C101	4030017710	S.CER ECJ0EC1H181J	T	83.9/7.2
C102	4030016930	S.CER ECJ0EB1A104K	T	108/32.8
C103	4030016930	S.CER ECJ0EB1A104K	B	55.3/19.3
C104	4550003250	S.TAN TEESVA 1V 474M8R	B	67.2/24.2
C105	4030017420	S.CER ECJ0EC1H470J	T	49.2/29.4
C106	4030017460	S.CER ECJ0EB1E102K	B	78/29.1
C107	4030016930	S.CER ECJ0EB1A104K	B	54.2/28.8
C109	4550006480	S.TAN TEESVA 1C 475M8R	B	56.1/27.7
C110	4030017420	S.CER ECJ0EC1H470J	T	60.1/27
C111	4030016930	S.CER ECJ0EB1A104K	B	66.3/30.3
C112	4030017460	S.CER ECJ0EB1E102K	B	67.4/30.3
C113	4030017420	S.CER ECJ0EC1H470J	T	72.1/26.6
C114	4030016790	S.CER ECJ0EB1C103K	T	24.2/22.3
C115	4030016790	S.CER ECJ0EB1C103K	T	21.4/22
C116	4030016790	S.CER ECJ0EB1C103K	T	28.5/22.6
C118	4030017640	S.CER ECJ0EC1H150J	T	20.5/28.7
C120	4030016790	S.CER ECJ0EB1C103K	T	32.6/22.5
C122	4030017660	S.CER ECJ0EC1H330J	T	39.8/28.9
C124	4030016930	S.CER ECJ0EB1A104K	B	90.3/18.9
C125	4030017460	S.CER ECJ0EB1E102K	B	128.5/52.6
C126	4030016930	S.CER ECJ0EB1A104K	T	79.6/20.6
C127	4030016930	S.CER ECJ0EB1A104K	B	82.8/20.1
C128	4030016930	S.CER ECJ0EB1A104K	T	78.4/19.3
C129	4030016930	S.CER ECJ0EB1A104K	B	63.7/16.4
C130	4030016930	S.CER ECJ0EB1A104K	B	135.6/25.4
C131	4030017660	S.CER ECJ0EC1H330J	T	135.9/25.7
C132	4030017660	S.CER ECJ0EC1H330J	T	135.9/18
C133	4030018010	S.CER ECJ0EC1H360J	T	48.1/35.5
C134	4030017640	S.CER ECJ0EC1H150J	T	49.4/34.8
C135	4030017660	S.CER ECJ0EC1H330J	T	64.1/32.5
C136	4030017340	S.CER ECJ0EC1H010B	T	71.1/30.8
C137	4030017570	S.CER ECJ0EC1H040B	T	71.1/29.9
C138	4030017730	S.CER ECJ0EB1E471K	T	71.9/33
C139	4030017390	S.CER ECJ0EC1H180J	T	62.1/32
C140	4030017360	S.CER ECJ0EC1H030B	T	72.5/30.7
C141	4030017360	S.CER ECJ0EC1H030B	T	72.1/29
C142	4030018860	S.CER ECJ0EB0J105K	T	89.5/12.7
C143	4030017400	S.CER ECJ0EC1H220J	T	71.3/36.6
C145	4030016790	S.CER ECJ0EB1C103K	T	31.4/35.2
C146	4030017610	S.CER ECJ0EC1H090C	T	35/33.1
C147	4030016790	S.CER ECJ0EB1C103K	T	34.5/35.2
C148	4030016790	S.CER ECJ0EB1C103K	T	30.9/26.4
C149	4030016930	S.CER ECJ0EB1A104K	B	78.2/17.4
C150	4030018560	S.CER C2012 JB 1A 475K-T	B	86.9/19.8
C151	4030016930	S.CER ECJ0EB1A104K	T	112.1/46
C152	4030016930	S.CER ECJ0EB1A104K	T	109.6/34.3
C153	4030017460	S.CER ECJ0EB1E102K	T	111.4/34.3
C154	4030018860	S.CER ECJ0EB0J105K	T	82.7/19.8
C155	4030017420	S.CER ECJ0EC1H470J	T	110.3/38.7
C156	4030017910	S.CER ECJ0EB1H152K	T	104.9/42.3
C157	4030017420	S.CER ECJ0EC1H470J	T	110.8/48.6
C158	4030017430	S.CER ECJ0EC1H101J	T	110.3/37.8
C159	4030017460	S.CER ECJ0EB1E102K	T	120.3/5.5
C160	4030017460	S.CER ECJ0EB1E102K	B	130.6/25.4
C161	4030018010	S.CER ECJ0EC1H360J	T	50.8/43.8
C162	4030017590	S.CER ECJ0EC1H070C	T	52.1/43.4
C163	4030017660	S.CER ECJ0EC1H330J	T	58.7/39.4
C164	4030017660	S.CER ECJ0EC1H330J	T	48.6/45.8
C165	4030017660	S.CER ECJ0EC1H330J	T	49.9/45.4
C166	4030017580	S.CER ECJ0EC1H060C	T	60.1/38.9
C167	4030017420	S.CER ECJ0EC1H470J	T	70/38.9
C168	4030017660	S.CER ECJ0EC1H330J	T	59.1/40.8
C169	4030017660	S.CER ECJ0EC1H330J	T	60.7/40.4
C170	4030017550	S.CER ECJ0EC1H1R5B	T	70.4/36.6
C171	4030017570	S.CER ECJ0EC1H040B	T	70/37.9
C172	4030017400	S.CER ECJ0EC1H220J	T	70/42.9
C173	4030017400	S.CER ECJ0EC1H220J	T	70/43.9
C174	4030017640	S.CER ECJ0EC1H150J	T	38.3/38.8
C175	4030016790	S.CER ECJ0EB1C103K	B	41.4/39.4
C176	4030016930	S.CER ECJ0EB1A104K	B	41/33.2
C177	4030017730	S.CER ECJ0EB1E471K	B	41/32.2
C178	4030016790	S.CER ECJ0EB1C103K	B	34.5/33
C180	4030017740	S.CER ECJ0EB1E821K	T	109.2/48.6
C181	4030016930	S.CER ECJ0EB1A104K	T	112.1/43.2
C182	4030016780	S.CER ECJ0EB1C153K	T	112.1/39.6
C183	4030017420	S.CER ECJ0EC1H470J	T	104.9/45
C184	4030017760	S.CER ECJ0EB1H222K	T	104.9/45.9
C185	4030017690	S.CER ECJ0EC1H121J	T	107.8/48.6
C186	4030016790	S.CER ECJ0EB1C103K	T	51.7/45.4
C187	4030017460	S.CER ECJ0EB1E102K	T	52.6/45.4
C188	4030016790	S.CER ECJ0EB1C103K	T	62.7/40.4
C189	4030017460	S.CER ECJ0EB1E102K	T	63.7/40.4
C190	4030017540	S.CER ECJ0EC1HR75B	T	55/48.3
C191	4030016790	S.CER ECJ0EB1C103K	T	70/40.9
C192	4030017540	S.CER ECJ0EC1HR75B	T	57.7/43
C193	4030017460	S.CER ECJ0EB1E102K	T	70/39.9
C194	4030017530	S.CER ECJ0EC1H0R5B	T	60/44.4
C195	4030016930	S.CER ECJ0EB1A104K	B	39/30
C196	4030017730	S.CER ECJ0EB1E471K	B	38.1/33.2

[MAIN-A UNIT] (MDC compatible)

REF NO.	PARTS NO.	DESCRIPTION	M.	H/V LOCATION
C197	4030016930	S.CER ECJ0EB1A104K	B	38.1/32.2
C198	4030017730	S.CER ECJ0EB1E471K	B	31.3/38.3
C199	4030016930	S.CER ECJ0EB1A104K	B	31.3/39.2
C200	4030016930	S.CER ECJ0EB1A104K	B	31.3/34
C201	4030017730	S.CER ECJ0EB1E471K	B	31.3/33.1
C202	4030017460	S.CER ECJ0EB1E102K	T	112.1/38.7
C203	4030017460	S.CER ECJ0EB1E102K	B	100.9/47
C205	4030018900	S.CER ECJ0EB0J474K	T	78.4/18.4
C206	4030016930	S.CER ECJ0EB1A104K	T	78.5/16.7
C207	4030017730	S.CER ECJ0EB1E471K	T	61/45.7
C208	4030017460	S.CER ECJ0EB1E102K	T	60/45.7
C209	4030017460	S.CER ECJ0EB1E102K	B	65/52.7
C210	4030017590	S.CER ECJ0EC1H070C	B	57.6/50.3
C211	4030017620	S.CER ECJ0EC1H100C	B	60/51.4
C212	4030017460	S.CER ECJ0EB1E102K	B	63.8/50.8
C214	4030017460	S.CER ECJ0EB1E102K	B	66.8/41.3
C215	4030017390	S.CER ECJ0EC1H180J	B	38.5/47.6
C216	4030017660	S.CER ECJ0EC1H330J	B	43.1/47.6
C217	4030017730	S.CER ECJ0EB1E471K	B	25/32.7
C218	4030016930	S.CER ECJ0EB1A104K	B	25/31.7
C219	4030017650	S.CER ECJ0EC1H270J	B	23/36.3
C220	4030017600	S.CER ECJ0EC1H080C	B	23/38
C221	4030016930	S.CER ECJ0EB1A104K	B	5.6/23.2
C222	4030017030	S.CER ECJ0EB1A273K	B	128.6/45.3
C223	4030016930	S.CER ECJ0EB1A104K	B	126.3/48.2
C224	4030017640	S.CER ECJ0EC1H150J	T	124.2/40.1
C225	4030016790	S.CER ECJ0EB1C103K	T	124.2/37.4
C226	4030017580	S.CER ECJ0EC1H060C	T	124.2/41.1
C227	4030017460	S.CER ECJ0EB1E102K	B	57.6/53.5
C228	4030017460	S.CER ECJ0EB1E102K	B	56.4/53.1
C229	4030017620	S.CER ECJ0EC1H100C	B	52.1/53.1
C230	4030017460	S.CER ECJ0EB1E102K	B	63.5/62.3
C231	4030017360	S.CER ECJ0EC1H030B	B	66.3/52.2
C232	4030017460	S.CER ECJ0EB1E102K	B	68.6/49.5
C235	4030017460	S.CER ECJ0EB1E102K	B	44.4/50.7
C236	4030017390	S.CER ECJ0EC1H180J	B	47.8/48.1
C237	4030017620	S.CER ECJ0EC1H100C	B	47.4/49.4
C240	4030017460	S.CER ECJ0EB1E102K	B	18.9/34.4
C241	4030017570	S.CER ECJ0EC1H040B [B]	B	17/37.7
	4030017360	S.CER ECJ0EC1H030B [F]		
	4030017360	S.CER ECJ0EC1H030B [D]		
	4030017570	S.CER ECJ0EC1H040B [G]		
	4030017360	S.CER ECJ0EC1H030B [J]		
	4030017570	S.CER ECJ0EC1H040B [K]		
	4030017570	S.CER ECJ0EC1H040B [H]		
	4030017570	S.CER ECJ0EC1H040B [I]		
C242	4030017460	S.CER ECJ0EB1E102K	B	15/34.4
C243	4030017460	S.CER ECJ0EB1E102K	B	18.9/33.5
C244	4030017460	S.CER ECJ0EB1E102K	B	15.7/31.7
C245	4550006780	S.TAN TEESVB2 0J 476M8R	B	5.6/18.7
C246	4030016930	S.CER ECJ0EB1A104K	B	105.1/52.2
C247	4030016930	S.CER ECJ0EB1A104K	B	107/52.9
C248	4030016930	S.CER ECJ0EB1A104K	B	108.1/52
C249	4030018900	S.CER ECJ0EB0J474K	B	121.8/47.4
C250	4030017630	S.CER ECJ0EC1H120J	T	120.4/40.1
C251	4030017400	S.CER ECJ0EC1H220J	B	61.9/64.2
C252	4030017420	S.CER ECJ0EC1H470J	B	62.6/71.1
C253	4030017730	S.CER ECJ0EB1E471K	B	61.6/71.1
C254	4030017420	S.CER ECJ0EC1H470J	B	63.9/69.5
C256	4030017460	S.CER ECJ0EB1E102K	B	59.7/65.5
C257	4030017460	S.CER ECJ0EB1E102K	B	63.4/67.4
C258	4030017460	S.CER ECJ0EB1E102K	T	13.9/32.5
C259	4030017460	S.CER ECJ0EB1E102K	T	10/35
C260	4030017590	S.CER ECJ0EC1H070C	B	14.2/36.3
C261	4030017460	S.CER ECJ0EB1E102K	B	9.5/33.9
C262	4030017460	S.CER ECJ0EB1E102K	B	13.7/37.7
C263	4030017490	S.CER C1608 JB 1A 105K-T	T	14.1/33.7
C264	4030017350	S.CER ECJ0EC1H020B	B	8.4/38.6
C265	4030017420	S.CER ECJ0EC1H470J [F]	B	8.6/36.3
	4030017420	S.CER ECJ0EC1H470J [D]		
	4030017420	S.CER ECJ0EC1H470J [J]		
C266	4030017460	S.CER ECJ0EB1E102K [F]	B	9.5/36.3
	4030017460	S.CER ECJ0EB1E102K [D]		
	4030017460	S.CER ECJ0EB1E102K [J]		
C267	4030017460	S.CER ECJ0EB1E102K	B	63.9/70.5
C268	4030017640	S.CER ECJ0EC1H150J	B	68.2/69.1
C269	4030017390	S.CER ECJ0EC1H180J [B]	B	69.7/69.1
	4030017650	S.CER ECJ0EC1H270J [F]		
	4030017650	S.CER ECJ0EC1H270J [D]		
	4030017390	S.CER ECJ0EC1H180J [G]		
	4030017650	S.CER ECJ0EC1H270J [J]		
	4030017390	S.CER ECJ0EC1H180J [K]		
	4030017390	S.CER ECJ0EC1H180J [H]		
	4030017390	S.CER ECJ0EC1H180J [I]		
C270	4030017390	S.CER ECJ0EC1H180J	B	71.2/69
C271	4030017400	S.CER ECJ0EC1H220J [B]	T	74.3/71.7
	4030017390	S.CER ECJ0EC1H180J [F]		
	4030017390	S.CER ECJ0EC1H180J [D]		
	4030017400	S.CER ECJ0EC1H220J [G]		
	4030017390	S.CER ECJ0EC1H180J [J]		
	4030017400	S.CER ECJ0EC1H220J [K]		
	4030017400	S.CER ECJ0EC1H220J [H]		
	4030017400	S.CER ECJ0EC1H220J [I]		
C272	4030016930	S.CER ECJ0EB1A104K	T	7.9/39.5
C273	4030016930	S.CER ECJ0EB1A104K	T	9.5/39.5
C274	4030017460	S.CER ECJ0EB1E102K	T	7.4/41.2
C275	4030016930	S.CER ECJ0EB1A104K	T	15/41
C276	4030017620	S.CER ECJ0EC1H100C	B	10.5/41
C277	4030017460	S.CER ECJ0EB1E102K	T	14/41
C278	4030017340	S.CER ECJ0EC1H010B	B	8.9/43.6
C279	4030017640	S.CER ECJ0EC1H150J	B	6.9/44.2
C280	4030017550	S.CER ECJ0EC1H1R5B	B	9.4/46.1
C281	4030017420	S.CER ECJ0EC1H470J	T	97.9/34.2
C282	4030017420	S.CER ECJ0EC1H470J	T	102.1/40
C283	4030017420	S.CER ECJ0EC1H470J	B	97.4/44.6

M.=Mounted side (T: Mounted on the Top side, B: Mounted on the Bottom side)
S.=Surface mount

[MAIN-A UNIT] (MDC compatible)

REF NO.	PARTS NO.	DESCRIPTION	M.	H/V LOCATION
C284	4030017420	S.CER ECJ0EC1H470J	T	94.8/35.5
C285	4030017420	S.CER ECJ0EC1H470J	B	94.2/44.4
C286	4030017420	S.CER ECJ0EC1H470J	T	92.1/43.3
C287	4030017420	S.CER ECJ0EC1H470J	T	92.1/41.6
C288	4030017460	S.CER ECJ0EB1E102K	B	4.8/46.5
C289	4030017640	S.CER ECJ0EC1H150J [B]	B	6.6/34.2
	4030017640	S.CER ECJ0EC1H150J [G]		
	4030017640	S.CER ECJ0EC1H150J [K]		
	4030017640	S.CER ECJ0EC1H150J [H]		
	4030017640	S.CER ECJ0EC1H150J [I]		
C290	4030017400	S.CER ECJ0EC1H220J	T	74.3/73.6
C291	4030017730	S.CER ECJ0EB1E471K	T	69.3/76.1
C292	4550000560	S.TAN TEESVA 1V 334M8R	T	67.6/74.4
C294	4030017420	S.CER ECJ0EC1H470J	T	70.4/76.1
C295	4030017420	S.CER ECJ0EC1H470J	T	56.7/67.3
C296	4510008530	S.ELE EEE1HA2R2SR	T	59.6/80
C297	4030017460	S.CER ECJ0EB1E102K	T	56.7/68.3
C299	4030017640	S.CER ECJ0EC1H150J	B	6.9/47.9
C301	4030017580	S.CER ECJ0EC1H060C	B	13.2/49.5
C302	4030017460	S.CER ECJ0EB1E102K	B	4.4/44.4
C303	4030016930	S.CER ECJ0EB1A104K	B	129.6/32
C304	4030017420	S.CER ECJ0EC1H470J	B	90/43.4
C305	4030011140	S.CER GRM31M2C2H120JV01L (GRM42-6 CH)	T	27.6/78.7
C306	4030011120	S.CER GRM31M2C2H100JV01L (GRM42-6 CH)	T	27.6/76.1
C307	4030011120	S.CER GRM31M2C2H100JV01L (GRM42-6 CH)	T	27.7/71.8
C308	4030011070	S.CER GRM31M2C2H5R0CY21L (GRM42-6 CH) [B]	T	27.7/69.2
	4030011140	S.CER GRM31M2C2H120JV01L (GRM42-6 CH) [F]		
	4030011140	S.CER GRM31M2C2H120JV01L (GRM42-6 CH) [D]		
	4030011070	S.CER GRM31M2C2H5R0CY21L (GRM42-6 CH) [G]		
	4030011140	S.CER GRM31M2C2H120JV01L (GRM42-6 CH) [J]		
	4030011070	S.CER GRM31M2C2H5R0CY21L (GRM42-6 CH) [K]		
	4030011070	S.CER GRM31M2C2H5R0CY21L (GRM42-6 CH) [H]		
	4030011070	S.CER GRM31M2C2H5R0CY21L (GRM42-6 CH) [I]		
C309	4030017460	S.CER ECJ0EB1E102K	T	71.5/76.1
C310	4030017420	S.CER ECJ0EC1H470J	T	43/76.1
C311	4030017460	S.CER ECJ0EB1E102K	T	44.1/76.1
C312	4030017730	S.CER ECJ0EB1E471K	T	45.3/76.1
C313	4510008680	S.ELE EEE1EA220SP	T	51.7/77.7
C314	4030017730	S.CER ECJ0EB1E471K	B	40.2/68.3
C315	4030017460	S.CER ECJ0EB1E102K	T	55.7/73.6
C316	4030016790	S.CER ECJ0EB1C103K	T	54.1/72.6
C317	4030011600	S.CER C1608 JB 1E 104K-T	T	54.1/67
C318	4030017460	S.CER ECJ0EB1E102K [B]	T	35.1/63.3
	4030017460	S.CER ECJ0EB1E102K [G]		
	4030017460	S.CER ECJ0EB1E102K [K]		
	4030017460	S.CER ECJ0EB1E102K [H]		
	4030017460	S.CER ECJ0EB1E102K [I]		
C319	4030017460	S.CER ECJ0EB1E102K [B]	T	47.3/67.4
	4030017460	S.CER ECJ0EB1E102K [G]		
	4030017460	S.CER ECJ0EB1E102K [K]		
	4030017460	S.CER ECJ0EB1E102K [H]		
	4030017460	S.CER ECJ0EB1E102K [I]		
C320	4030017580	S.CER ECJ0EC1H060C	B	15/52.7
C321	4030017460	S.CER ECJ0EB1E102K	B	14.9/49.5
C322	4030017600	S.CER ECJ0EC1H080C	B	19.3/52
C323	4030017570	S.CER ECJ0EC1H040B	B	20/49.6
C324	4030017420	S.CER ECJ0EC1H470J	B	90/41.8
C325	4030017460	S.CER ECJ0EB1E102K	T	72.5/64.9
C326	4030017420	S.CER ECJ0EC1H470J	B	46.2/64.3
C327	4030017460	S.CER ECJ0EB1E102K	B	84.2/79
C328	4030017460	S.CER ECJ0EB1E102K	B	83.2/79
C329	4030017460	S.CER ECJ0EB1E102K	B	82.1/79
C330	4030017460	S.CER ECJ0EB1E102K	B	81/79
C331	4030017460	S.CER ECJ0EB1E102K	B	80/79
C332	4030016930	S.CER ECJ0EB1A104K	T	51.9/71.9
C334	4030017460	S.CER ECJ0EB1E102K	T	49.5/68.6
C335	4030017460	S.CER ECJ0EB1E102K	T	53.8/63.2
C336	4030017580	S.CER ECJ0EC1H060C	B	20.8/52
C337	4030017390	S.CER ECJ0EC1H180J	B	25.1/51.2
C338	4510008600	S.ELE EEE1CA4R7NR	T	79.1/69.1
C339	4030017460	S.CER ECJ0EB1E102K	T	79.1/62.1
C340	4030017460	S.CER ECJ0EB1E102K	T	37.5/20.8
C341	4030016790	S.CER ECJ0EB1C103K	T	41.9/19.4
C342	4030017200	S.CER GRM31BR32J102KY01L (GHM1030 R)	T	25.3/62.5
C343	4030011270	S.CER GRM31M2C2H200JV01L (GRM42-6 CH)	T	22.1/63.9
C345	4030011170	S.CER GRM31M2C2H180JV01L (GRM42-6 CH)	T	17.3/57.4
C346	4030011170	S.CER GRM31M2C2H180JV01L (GRM42-6 CH)	T	30.2/62.8
C347	4030017520	S.CER ECJ0EC1H0R3B	B	25.4/63
C348	4030017460	S.CER ECJ0EB1E102K	B	31.5/63.4
C349	4030016930	S.CER ECJ0EB1A104K	T	100.5/63.5
C350	4550005980	S.TAN TEESVA 1A 475M8R	T	101.6/62
C351	4030016930	S.CER ECJ0EB1A104K	T	110.6/67.4
C352	4030017460	S.CER ECJ0EB1E102K	B	124.6/59.6
C353	4550005980	S.TAN TEESVA 1A 475M8R	B	124.5/61.3
C354	4550006250	S.TAN TEESVA 1A 106M8R	B	112.9/61.7
C355	4030017420	S.CER ECJ0EC1H470J	B	112.6/60.1
C356	4030011270	S.CER GRM31M2C2H200JV01L (GRM42-6 CH)	T	14.7/62.9
C357	4030011270	S.CER GRM31M2C2H200JV01L (GRM42-6 CH)	T	10.4/62.9

[MAIN-A UNIT] (MDC compatible)

REF NO.	PARTS NO.	DESCRIPTION	M.	H/V LOCATION
C358	4030007030	S.CER C1608 CH 1H 150J-T	B	10.6/56.4
C359	4030011340	S.CER C1608 CH 1H 471J-T	B	9.4/56.4
C360	4030017460	S.CER ECJ0EB1E102K	B	4/53
C361	4030017460	S.CER ECJ0EB1E102K	T	103.9/53.5
C362	4030017460	S.CER ECJ0EB1E102K	T	108.2/24.5
C363	4510008540	S.ELE EEE1CA100SR	T	139.1/31.9
C365	4550007650	S.TAN F931V105MAABMA	B	106.7/65
C366	4550007650	S.TAN F931V105MAABMA	B	104.2/65
C367	4550007650	S.TAN F931V105MAABMA	B	101.6/65
C368	4550007650	S.TAN F931V105MAABMA	B	99.5/64.6
C369	4030011270	S.CER GRM31M2C2H200JV01L (GRM42-6 CH)	T	15.8/78.9
C370	4030011270	S.CER GRM31M2C2H200JV01L (GRM42-6 CH)	T	15.8/83.1
C371	4030017460	S.CER ECJ0EB1E102K	B	4.1/81.6
C372	4030006850	S.CER C1608 JB 1H 471K-T	B	8.3/77.1
C373	4030016930	S.CER ECJ0EB1A104K	B	130.9/51.7
C374	4030016930	S.CER ECJ0EB1A104K	B	133/51.3
C375	4030016930	S.CER ECJ0EB1A104K	B	132.4/54.6
C377	4030017460	S.CER ECJ0EB1E102K	T	105.9/51.9
C378	4030017460	S.CER ECJ0EB1E102K	T	108.2/78
C379	4030016930	S.CER ECJ0EB1A104K	B	108.4/80.3
C380	4030017460	S.CER ECJ0EB1E102K	T	119.9/83.2
C381	4030016790	S.CER ECJ0EB1C103K	B	135.9/70.5
C383	4030017460	S.CER ECJ0EB1E102K	B	135.9/71.5
C384	4510008870	S.ELE EEE1AA471UP	T	129.9/64.9
C386	4030016930	S.CER ECJ0EB1A104K	B	138.8/53.7
C387	4030017720	S.CER ECJ0EB1H331K	B	135.4/51.3
C388	4030018860	S.CER ECJ0EB0J105K	B	138.6/52.2
C389	4030016930	S.CER ECJ0EB1A104K	B	139.1/49.4
C390	4030016930	S.CER ECJ0EB1A104K	B	137.8/55.4
C391	4030016930	S.CER ECJ0EB1A104K	T	101.8/82.3
C392	4030017460	S.CER ECJ0EB1E102K	B	131/74.6
C393	4030017460	S.CER ECJ0EB1E102K	B	99/79
C394	4030017420	S.CER ECJ0EC1H470J	B	115.4/68
C395	4030017460	S.CER ECJ0EB1E102K	B	128.2/76.5
C397	4030017460	S.CER ECJ0EB1E102K	B	99.8/86.3
C398	4030017420	S.CER ECJ0EC1H470J	B	100.8/86.3
C399	4030018860	S.CER ECJ0EB0J105K	B	136.3/37.1
C400	4030016930	S.CER ECJ0EB1A104K	B	139.7/35.3
C411	4510008780	S.ELE EEE1EA471P	T	117.2/63.6
C412	4510008780	S.ELE EEE1EA471P	T	132.7/54.3
C413	4030018900	S.CER ECJ0EB0J474K	B	135.1/46.8
C414	4510008540	S.ELE EEE1CA100SR	T	118.7/50.5
C415	4030016930	S.CER ECJ0EB1A104K	B	103/23.8
C416	4030016930	S.CER ECJ0EB1A104K	B	120.3/51.6
C417	4030016790	S.CER ECJ0EB1C103K	B	115.6/52.8
C418	4030017460	S.CER ECJ0EB1E102K	T	109.6/54.5
C419	4030016790	S.CER ECJ0EB1C103K	T	42.9/39.2
C420	4030017420	S.CER ECJ0EC1H470J	T	41/37.4
C421	4030016930	S.CER ECJ0EB1A104K	B	36/24.7
C422	4030016790	S.CER ECJ0EB1C103K	T	43.1/31.9
C423	4030017420	S.CER ECJ0EC1H470J	T	39.9/35.3
C424	4030016930	S.CER ECJ0EB1A104K	T	38.9/32.2
C425	4030017460	S.CER ECJ0EB1E102K	B	134.8/66.1
C426	4030018860	S.CER ECJ0EB0J105K	B	110/12.1
C427	4030017460	S.CER ECJ0EB1E102K	B	109.1/10.4
C430	4030017570	S.CER ECJ0EC1H040B	T	78.2/44.8
C431	4030017590	S.CER ECJ0EC1H070C	T	23/21.9
C432	4030016930	S.CER ECJ0EB1A104K	T	22.4/10.5
C433	4030016930	S.CER ECJ0EB1A104K	B	23/7.3
C434	4030017650	S.CER ECJ0EC1H270J	B	28.3/5.6
C435	4030017040	S.CER ECJ0EB1A333K	B	29.2/7.3
C436	4030016930	S.CER ECJ0EB1A104K	B	21.2/5.6
C437	4030016930	S.CER ECJ0EB1A104K	B	27.6/8.7
C438	4030016930	S.CER ECJ0EB1A104K	B	31.6/5.7
C440	4030016930	S.CER ECJ0EB1A104K	B	22.1/8.9
C441	4030017610	S.CER ECJ0EC1H090C	B	25.9/39.5
C451	4030018860	S.CER ECJ0EB0J105K	B	93.8/6.5
C452	4030019120	S.CER GRM188B31E105KA75D	B	129.7/64.1
C453	4030016930	S.CER ECJ0EB1A104K	B	132.4/56.3
J1	6510026770	S.CON AXK540147YG	T	124.5/9.7
J2	6510026770	S.CON AXK540147YG	T	101.5/9.7
J3	6510021301	S.CON 52365-1071	T	90.3/62.6
J5	6510023092	S.CON 20FLT-SM2-TB(LF)(SN)(M)	T	108.3/81.8
J10	6510023092	S.CON 20FLT-SM2-TB(LF)(SN)(M)	T	71/7
EP1	6910015600	S.BEA ACZ1005Y-241 (240)	B	39.8/8.1
EP2	6910015370	S.BEA ACZ1005Y-102-T	B	50.1/12.4
EP3	6910015370	S.BEA ACZ1005Y-102-T	T	82.6/37.1

M.=Mounted side (T: Mounted on the Top side, B: Mounted on the Bottom side)
S.=Surface mount

[FRONT UNIT]

REF NO.	PARTS NO.	DESCRIPTION		M.	H/V LOCATION
IC501	1130009121	S.IC	S1D15206F00A200	B	33.1/19.5
IC502	1110005771	S.IC	S-80942CNMC-G9CT2G	B	61.4/9.7
IC503	1140010771	S.IC	HD64F3687FPV(EMPTY)	B	62.1/25.2
IC504	1130007111	S.IC	TC7W04FU(TE12L,F)	B	73.9/26.3
IC505	1110005310	S.IC	AN6123MS	B	10/8.4
IC506	1110005350	S.IC	NJM2870F05-TE1-#FZZB	B	84.9/9.9
IC507	1130006221	S.IC	TC4W53FU(TE12L,F)	B	6.5/19
IC508	1130008561	S.IC	TC75S51F(TE85L,F)	B	74/11.3
Q501	1590001050	S.TRA	DTC114TUA T106	B	15.1/32.9
Q502	1590001050	S.TRA	DTC114TUA T106	B	18/32.9
Q503	1590001330	S.TRA	DTA114EUA T106	B	77/24.7
Q504	1530002851	S.TRA	2SC4116-BL(TE85R,F)	B	91.5/22.4
Q505	1590001050	S.TRA	DTC114TUA T106	B	92.5/18.8
Q506	1590000680	S.TRA	DTC114EUA T106	B	77/27.4
Q507	1590001050	S.TRA	DTC114TUA T106	B	51.4/30.2
D501	1750000370	S.DIO	DA221 TL	T	3.5/27.1
D502	1750000370	S.DIO	DA221 TL	T	3.5/25
D503	1750000370	S.DIO	DA221 TL	T	3.5/22.9
D504	1790001261	S.DIO	MA2S077G0L	B	50.9/23.1
D505	1790001251	S.DIO	MA2S1110GL	B	3.3/23.3
D506	1790001251	S.DIO	MA2S1110GL	B	82.1/21.7
D507	1790001251	S.DIO	MA2S1110GL	B	79.7/25.8
D508	1790000951	S.ZEN	MAZ8056GML	T	4.8/19.7
D509	1790000951	S.ZEN	MAZ8056GML	T	8.6/19.7
D510	1790000951	S.ZEN	MAZ8056GML	T	10.4/19.7
X501	6050011720	S.XTA	CR-764 SMD-49TB 19.6608 MHz <KDS>	B	49.6/18.9
L501	6200003640	S.COI	MLF1608E 100K-T	B	12/19.1
R501	7030003810	S.RES	ERJ3GEYJ 125 V (1.2M)	B	46/28.8
R502	7030003810	S.RES	ERJ3GEYJ 125 V (1.2M)	B	46.6/23.8
R503	7310005510	S.TRI	TMC3ADCS5X (470K)	B	45.5/26.3
R504	7030005120	S.RES	ERJ2GEJ 102 X (1K)	B	8/29.3
R505	7030005120	S.RES	ERJ2GEJ 102 X (1K)	B	10/29.3
R506	7030005120	S.RES	ERJ2GEJ 102 X (1K)	B	12/29.3
R507	7030005010	S.RES	ERJ2GEJ 681 X (680)	T	14.3/37.2
R508	7030005120	S.RES	ERJ2GEJ 102 X (1K)	T	14.3/36.3
R509	7510001730	S.THE	ERTJOEP 473J	B	59.9/17.1
R510	7030005120	S.RES	ERJ2GEJ 102 X (1K)	B	61.1/17.1
R511	7030005530	S.RES	ERJ2GEJ 100 X (10)	B	57.1/19.4
R512	7030008010	S.RES	ERJ2GEJ 123 X (12K)	B	52/22.7
R513	7030005050	S.RES	ERJ2GEJ 103 X (10K)	B	63.8/10.2
R514	7030005160	S.RES	ERJ2GEJ 105 X (1M)	B	56.1/20.7
R515	7030008010	S.RES	ERJ2GEJ 123 X (12K)	B	52.3/23.9
R516	7030008010	S.RES	ERJ2GEJ 123 X (12K)	B	49.5/23.9
R517	7410001140	S.ARR	EXB28V104JX	B	66.5/10.8
R518	7410001140	S.ARR	EXB28V104JX	B	67.5/19.2
R519	7030005090	S.RES	ERJ2GEJ 104 X (100K)	B	51.5/26.9
R520	7030005090	S.RES	ERJ2GEJ 104 X (100K)	B	71.6/26.8
R522	7030005090	S.RES	ERJ2GEJ 104 X (100K)	T	3.3/17.2
R523	7030004980	S.RES	ERJ2GEJ 101 X (100)	B	13.2/10.9
R524	7030005090	S.RES	ERJ2GEJ 104 X (100K)	B	71.6/28.4
R525	7030005240	S.RES	ERJ2GEJ 473 X (47K)	B	80.2/27
R526	7030007300	S.RES	ERJ2GEJ 332 X (3.3K)	B	79/24.4
R528	7030005090	S.RES	ERJ2GEJ 104 X (100K)	B	71.7/24.1
R529	7030005090	S.RES	ERJ2GEJ 104 X (100K)	B	82.1/19.6
R530	7030005160	S.RES	ERJ2GEJ 105 X (1M)	B	5.4/10
R531	7030009280	S.RES	ERJ2GEJ 391 X	B	92/20.6
R532	7030005120	S.RES	ERJ2GEJ 102 X (1K)	B	91.4/24.2
R533	7030007290	S.RES	ERJ2GEJ 222 X (2.2K)	B	91.4/25.2
R534	7030009140	S.RES	ERJ2GEJ 272 X (2.7K)	B	90.6/20.2
R535	7030005090	S.RES	ERJ2GEJ 104 X (100K)	B	82.4/31.4
R536	7030005050	S.RES	ERJ2GEJ 103 X (10K)	B	77.8/22.9
R537	7030005090	S.RES	ERJ2GEJ 104 X (100K)	T	7.2/19.2
R538	7030005090	S.RES	ERJ2GEJ 104 X (100K)	T	6.2/19.2
R539	7030010040	S.RES	ERJ2GEJ-JPW	B	76/15.9
R540	7030009290	S.RES	ERJ2GEJ 562 X (5.6K)	B	4.3/10.9
R541	7030007290	S.RES	ERJ2GEJ 222 X (2.2K)	B	3.3/16.6
R542	7030009160	S.RES	ERJ2GEJ 181 X (180)	B	89.8/24.2
R543	7030009160	S.RES	ERJ2GEJ 181 X (180)	B	89.8/25.2
R545	7030005240	S.RES	ERJ2GEJ 473 X (47K)	T	11.8/19.2
R546	7210003050	VAR	EVU-F2KFK3 B14 (10KB)		
R547	7030005120	S.RES	ERJ2GEJ 102 X (1K)	T	11.8/17.2
R548	7030005120	S.RES	ERJ2GEJ 102 X (1K)	T	6.8/17.2
R549	7030005120	S.RES	ERJ2GEJ 102 X (1K)	T	9.3/17.2
R550	7030005240	S.RES	ERJ2GEJ 473 X (47K)	B	10.9/19.4
R551	7030007300	S.RES	ERJ2GEJ 332 X (3.3K)	B	11/5.8
R552	7030009280	S.RES	ERJ2GEJ 391 X	B	10.1/5.8
R553	7030007290	S.RES	ERJ2GEJ 222 X (2.2K)	B	75.2/8.7
R554	7030007290	S.RES	ERJ2GEJ 222 X (2.2K) [A]	B	71.4/12.4
	7030007290	S.RES	ERJ2GEJ 222 X (2.2K) [E]		
	7030007290	S.RES	ERJ2GEJ 222 X (2.2K) [C]		
	7030009140	S.RES	ERJ2GEJ 272 X (2.7K) [B]		
	7030009140	S.RES	ERJ2GEJ 272 X (2.7K) [F]		
	7030009140	S.RES	ERJ2GEJ 272 X (2.7K) [D]		
	7030009140	S.RES	ERJ2GEJ 272 X (2.7K) [G]		
	7030009140	S.RES	ERJ2GEJ 272 X (2.7K) [J]		
	7030009140	S.RES	ERJ2GEJ 272 X (2.7K) [K]		
	7030009140	S.RES	ERJ2GEJ 272 X (2.7K) [H]		
	7030009140	S.RES	ERJ2GEJ 272 X (2.7K) [I]		

[FRONT UNIT]

REF NO.	PARTS NO.	DESCRIPTION		M.	H/V LOCATION
R555	7030005220	S.RES	ERJ2GEJ 223 X (22K) [A]	B	71.4/11.5
	7030005220	S.RES	ERJ2GEJ 223 X (22K) [E]		
	7030005220	S.RES	ERJ2GEJ 223 X (22K) [C]		
	7030008290	S.RES	ERJ2GEJ 183 X (18K) [B]		
	7030008290	S.RES	ERJ2GEJ 183 X (18K) [F]		
	7030008290	S.RES	ERJ2GEJ 183 X (18K) [D]		
	7030008290	S.RES	ERJ2GEJ 183 X (18K) [G]		
	7030008290	S.RES	ERJ2GEJ 183 X (18K) [J]		
	7030008290	S.RES	ERJ2GEJ 183 X (18K) [K]		
	7030008290	S.RES	ERJ2GEJ 183 X (18K) [H]		
	7030008290	S.RES	ERJ2GEJ 183 X (18K) [I]		
R556	7030005050	S.RES	ERJ2GEJ 103 X (10K)	B	73.2/8.7
R557	7030005050	S.RES	ERJ2GEJ 103 X (10K)	B	71.8/10.2
R558	7030005060	S.RES	ERJ2GEJ 333 X (33K) [A]	B	74/13.5
	7030005060	S.RES	ERJ2GEJ 333 X (33K) [E]		
	7030005060	S.RES	ERJ2GEJ 333 X (33K) [C]		
	7030008010	S.RES	ERJ2GEJ 123 X (12K) [B]		
	7030008010	S.RES	ERJ2GEJ 123 X (12K) [F]		
	7030008010	S.RES	ERJ2GEJ 123 X (12K) [D]		
	7030008010	S.RES	ERJ2GEJ 123 X (12K) [G]		
	7030008010	S.RES	ERJ2GEJ 123 X (12K) [J]		
	7030008010	S.RES	ERJ2GEJ 123 X (12K) [K]		
	7030008010	S.RES	ERJ2GEJ 123 X (12K) [H]		
	7030008010	S.RES	ERJ2GEJ 123 X (12K) [I]		
R559	7030005090	S.RES	ERJ2GEJ 104 X (100K)	B	11/20.8
R560	7030005090	S.RES	ERJ2GEJ 104 X (100K)	T	6.2/20.8
C501	4030016930	S.CER	ECJ0EB1A104K	B	41.8/30.2
C502	4030016930	S.CER	ECJ0EB1A104K	B	40.9/30.2
C503	4030016930	S.CER	ECJ0EB1A104K	B	42.7/30.2
C504	4030016930	S.CER	ECJ0EB1A104K	B	43.6/30.2
C505	4030016930	S.CER	ECJ0EB1A104K	B	44.5/30.2
C506	4030017490	S.CER	C1608 JB 1A 105K-T	B	44.7/23.2
C507	4030017460	S.CER	ECJ0EB1E102K	B	46.1/22.7
C508	4030017490	S.CER	C1608 JB 1A 105K-T	B	43.4/23.2
C509	4030017730	S.CER	ECJ0EB1E471K	B	13.1/33.3
C510	4030017730	S.CER	ECJ0EB1E471K	B	18.6/30.5
C511	4030016790	S.CER	ECJ0EB1C103K	B	58.3/17.1
C512	4030016930	S.CER	ECJ0EB1A104K	B	62/17.1
C513	4030017030	S.CER	ECJ0EB1A273K	B	59.1/10.2
C514	4030016930	S.CER	ECJ0EB1A104K	B	58.3/18.3
C515	4030017630	S.CER	ECJ0EC1H120J	B	57.1/17.8
C516	4030017580	S.CER	ECJ0EC1H060C	B	48.9/22.7
C517	4030016790	S.CER	ECJ0EB1C103K	B	52.9/22.7
C518	4030017640	S.CER	ECJ0EC1H150J	B	49.8/22.7
C519	4030016930	S.CER	ECJ0EB1A104K	B	53.8/22.7
C520	4030017420	S.CER	ECJ0EC1H470J	T	12.5/36.3
C521	4030017460	S.CER	ECJ0EB1E102K	B	78.8/27.5
C522	4550006480	S.TAN	TEESVA 1C 475M8R	B	87.7/9.8
C523	4550006250	S.TAN	TEESVA 1A 106M8R	B	12.8/7.6
C524	4550006250	S.TAN	TEESVA 1A 106M8R	B	7.2/7.6
C525	4030017330	S.CER	ECJ0EF1C104Z	B	85.7/7.7
C526	4030016790	S.CER	ECJ0EB1C103K	B	84.1/7.7
C527	4030017420	S.CER	ECJ0EC1H470J	T	5.9/17.2
C528	4030017460	S.CER	ECJ0EB1E102K	T	8.4/17.2
C529	4550006250	S.TAN	TEESVA 1A 106M8R	B	82.1/9.8
C530	4030016930	S.CER	ECJ0EB1A104K	B	84.1/12.1
C531	4030017460	S.CER	ECJ0EB1E102K	B	79/22.5
C533	4030017460	S.CER	ECJ0EB1E102K	B	80/22.5
C534	4030017420	S.CER	ECJ0EC1H470J	B	76.2/22.9
C535	4030016930	S.CER	ECJ0EB1A104K	B	5.4/9.1
C536	4030016930	S.CER	ECJ0EB1A104K	B	3.3/18.2
C537	4030017460	S.CER	ECJ0EB1E102K	B	14/25
C538	4030017330	S.CER	ECJ0EF1C104Z	B	6/10.9
C539	4030017420	S.CER	ECJ0EC1H470J	T	10.9/17.2
C540	4030017460	S.CER	ECJ0EB1E102K	B	10.9/17.8
C541	4030017420	S.CER	ECJ0EC1H470J	B	8.5/10.9
C543	4030017420	S.CER	ECJ0EC1H470J	B	77.6/16.7
C544	4030017420	S.CER	ECJ0EC1H470J	B	79.8/16.7
C545	4030017420	S.CER	ECJ0EC1H470J	B	77.6/15.8
C546	4030017420	S.CER	ECJ0EC1H470J	B	74/15.3
C547	4030017460	S.CER	ECJ0EB1E102K	B	74/16.2
C548	4030017490	S.CER	C1608 JB 1A 105K-T	B	9.7/19.3
C549	4030016930	S.CER	ECJ0EB1A104K	B	3.7/21.2
C550	4030018900	S.CER	ECJ0EB0J474K	B	70.1/11.9
C551	4030016930	S.CER	ECJ0EB1A104K	B	70.9/10.2
C552	4030017460	S.CER	ECJ0EB1E102K	B	75.2/6.9
C553	4030017460	S.CER	ECJ0EB1E102K	B	71.4/13.3
C554	4030016790	S.CER	ECJ0EB1C103K	B	74.2/8.7
C555	4030017460	S.CER	ECJ0EB1E102K [A]	B	74/14.4
	4030017460	S.CER	ECJ0EB1E102K [E]		
	4030017460	S.CER	ECJ0EB1E102K [C]		
	4030018920	S.CER	ECJ0EB1H392K [B]		
	4030018920	S.CER	ECJ0EB1H392K [F]		
	4030018920	S.CER	ECJ0EB1H392K [D]		
	4030018920	S.CER	ECJ0EB1H392K [G]		
	4030018920	S.CER	ECJ0EB1H392K [J]		
	4030018920	S.CER	ECJ0EB1H392K [K]		
	4030018920	S.CER	ECJ0EB1H392K [H]		
	4030018920	S.CER	ECJ0EB1H392K [I]		
C556	4550006480	S.TAN	TEESVA 1C 475M8R	B	76.9/10.2
J501	6510022022	S.CON	14FLT-SM2-TB(LF)(SN)(M)	B	88/28.5
J502	6510023092	S.CON	20FLT-SM2-TB(LF)(SN)(M)	B	75.5/19.5
DS501	5030003020	LCD	L6-0226TVM-3		
DS502	5040002670	S.LED	CL-165HR/YG	T	18.2/35.9
DS503	5040002310	S.LED	SML-311YTT86	T	32.8/6.5
DS504	5040002310	S.LED	SML-311YTT86	T	46.1/6.3
DS505	5040002310	S.LED	SML-311YTT86	T	59.8/6.3
DS506	5040002310	S.LED	SML-311YTT86	T	92.3/24.5
DS507	5040002310	S.LED	SML-311YTT86	T	73.1/6.5

M.=Mounted side (T: Mounted on the Top side, B: Mounted on the Bottom side)
S.=Surface mount

[FRONT UNIT]

REF NO.	PARTS NO.	DESCRIPTION	M.	H/V LOCATION
DS508	5040002310	S.LED SML-311YTT86	T	31.7/26
DS509	5040002310	S.LED SML-311YTT86	T	40.2/26
DS510	5040002310	S.LED SML-311YTT86	T	48.7/26
DS511	5040002310	S.LED SML-311YTT86	T	74.2/26
DS512	5040002310	S.LED SML-311YTT86	T	65.7/26
DS513	5040002310	S.LED SML-311YTT86	T	57.2/26

[CONNECT UNIT]

REF NO.	PARTS NO.	DESCRIPTION	M.	H/V LOCATION
C601	4030017420	S.CER ECJ0EC1H470J	T	12.7/4.6
C602	4030017420	S.CER ECJ0EC1H470J	T	15.4/4.6
C603	4030017420	S.CER ECJ0EC1H470J	T	18.2/4.6
C604	4030017420	S.CER ECJ0EC1H470J	T	19.6/4.6
C605	4030017420	S.CER ECJ0EC1H470J	T	20.9/4.6
C606	4030017420	S.CER ECJ0EC1H470J	T	25.1/4.6
C607	4030017420	S.CER ECJ0EC1H470J	T	37.5/13.2
C608	4030017420	S.CER ECJ0EC1H470J	T	16.8/4.6
C609	4030017420	S.CER ECJ0EC1H470J	T	40.3/13.2
C610	4030017420	S.CER ECJ0EC1H470J	T	41.7/4.6
J601	6510025240	S.CON IMSA-9631S-20Y912 [A]	B	32.2/16.2
	6510025240	S.CON IMSA-9631S-20Y912 [E]		
	6510025240	S.CON IMSA-9631S-20Y912 [C]		
	6510025240	S.CON IMSA-9631S-20Y912 [B]		
	6510025240	S.CON IMSA-9631S-20Y912 [F]		
	6510025240	S.CON IMSA-9631S-20Y912 [D]		
	6510025240	S.CON IMSA-9631S-20Y912 [G]		
	6510025240	S.CON IMSA-9631S-20Y912 [J]		
	6510025242	S.CON IMSA-9631S-20Y930 [K]		
	6510025240	S.CON IMSA-9631S-20Y912 [H]		
	6510025240	S.CON IMSA-9631S-20Y912 [I]		

M.=Mounted side (T: Mounted on the Top side, B: Mounted on the Bottom side)
S.=Surface mount

VOLTAGE DIAGRAM

FRONT UNIT

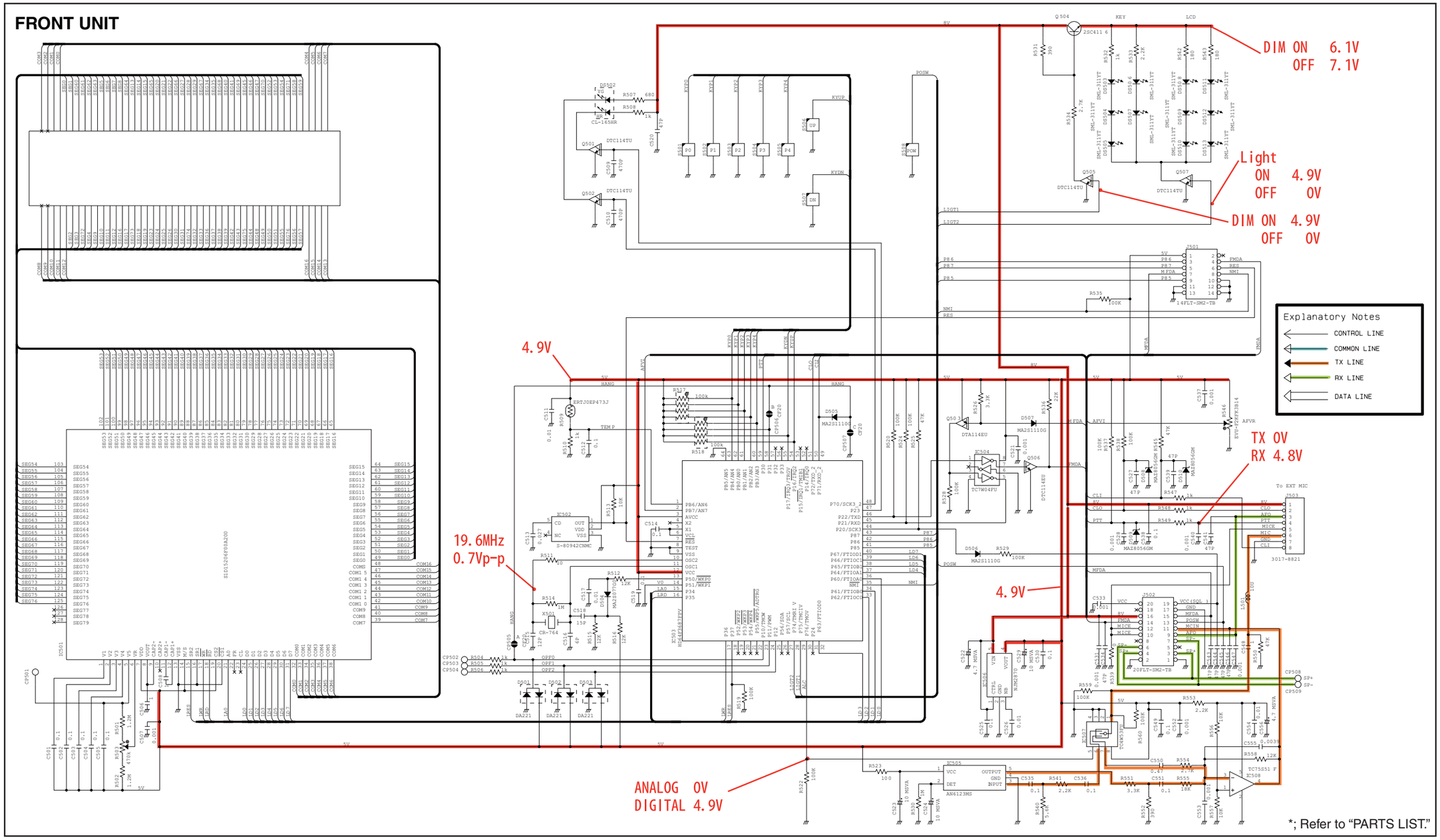

• **Other than "MDC compatible"**

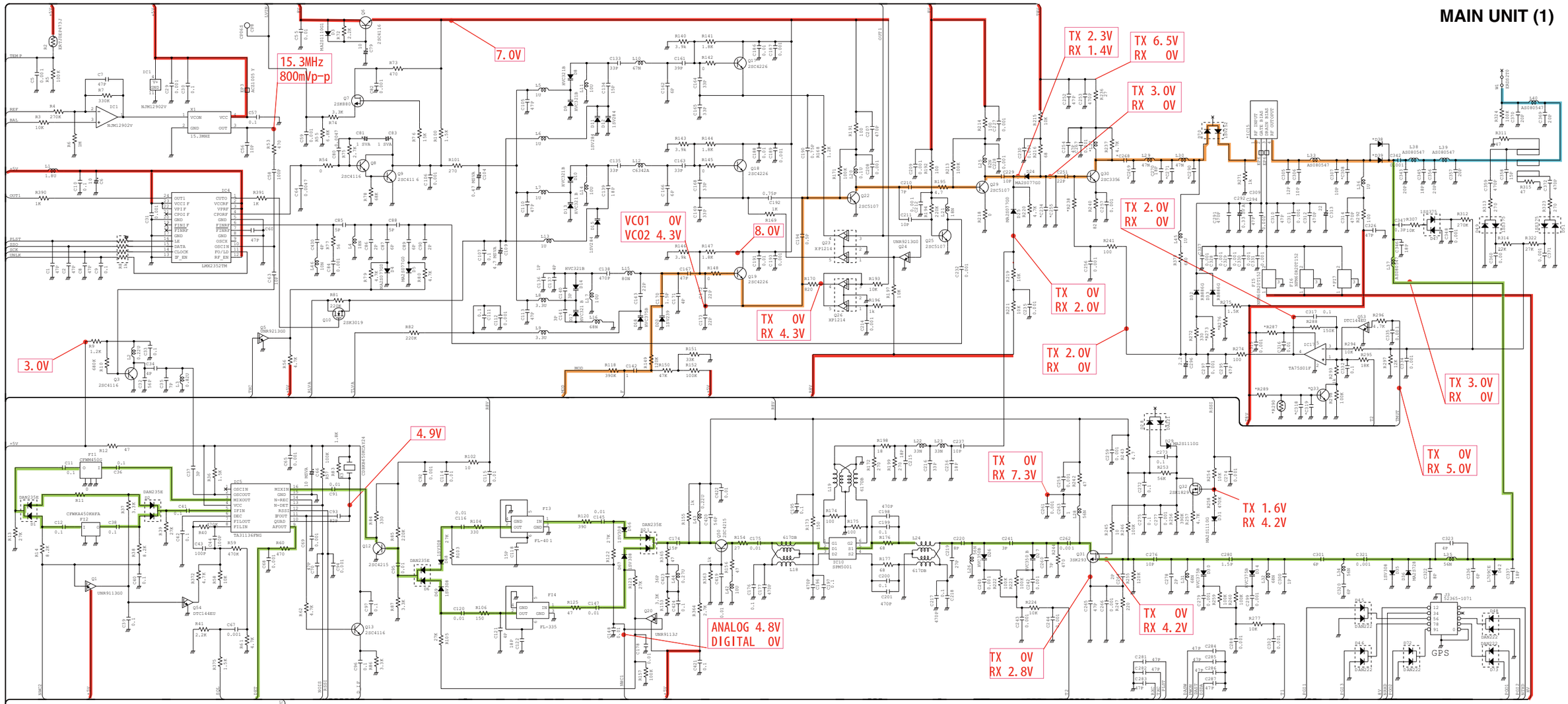

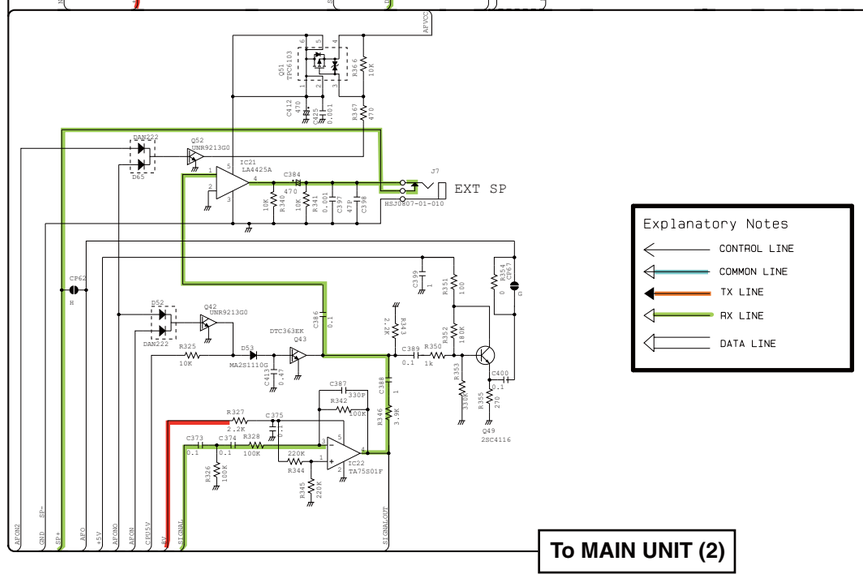

Explanatory Notes

- CONTROL LINE
- COMMON LINE
- TX LINE
- RX LINE
- DATA LINE

To MAIN UNIT (2)

*; Refer to "PARTS LIST."

• Other than "MDC compatible"

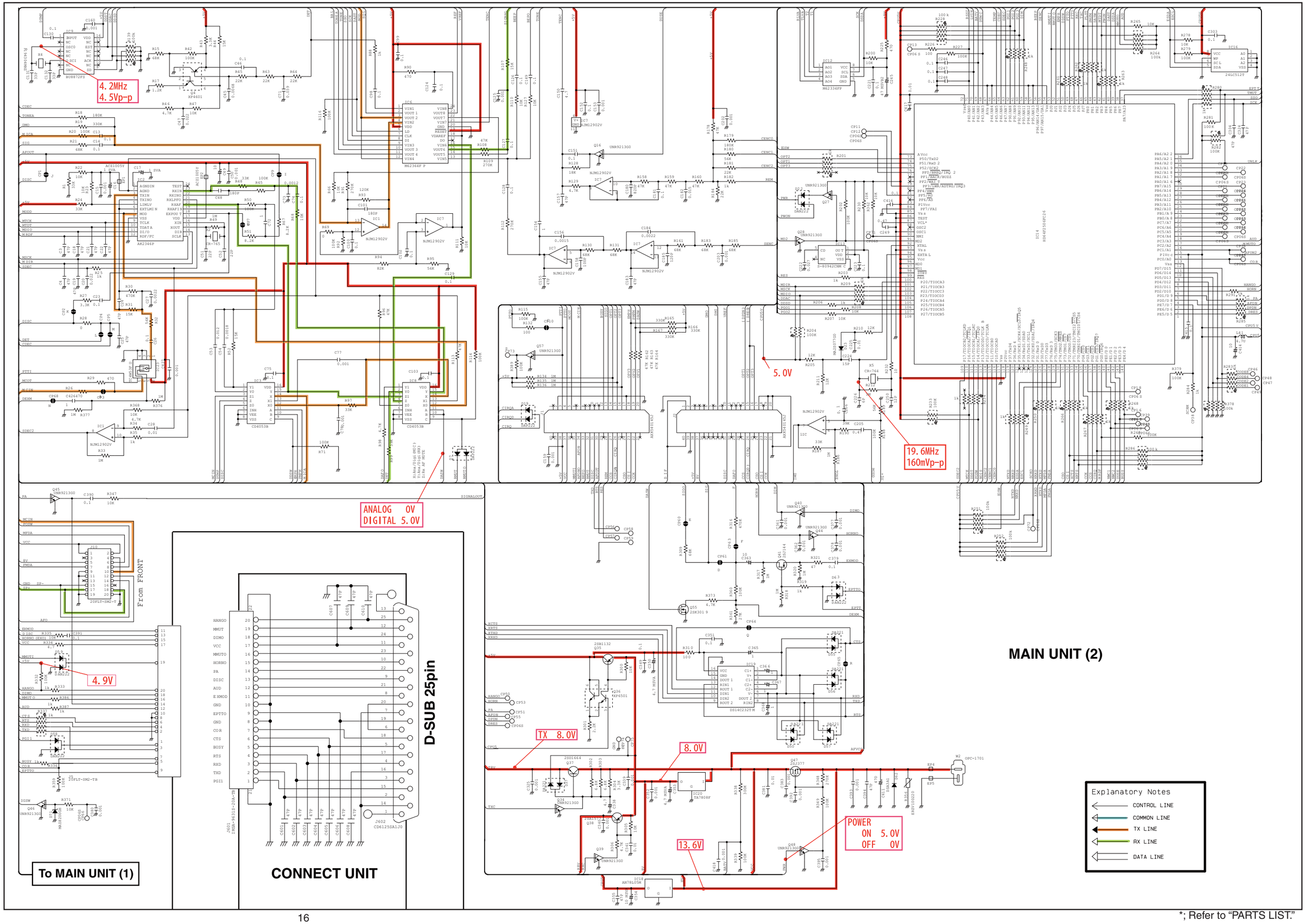

*; Refer to "PARTS LIST."

• MDC compatible

MAIN-A UNIT (1)

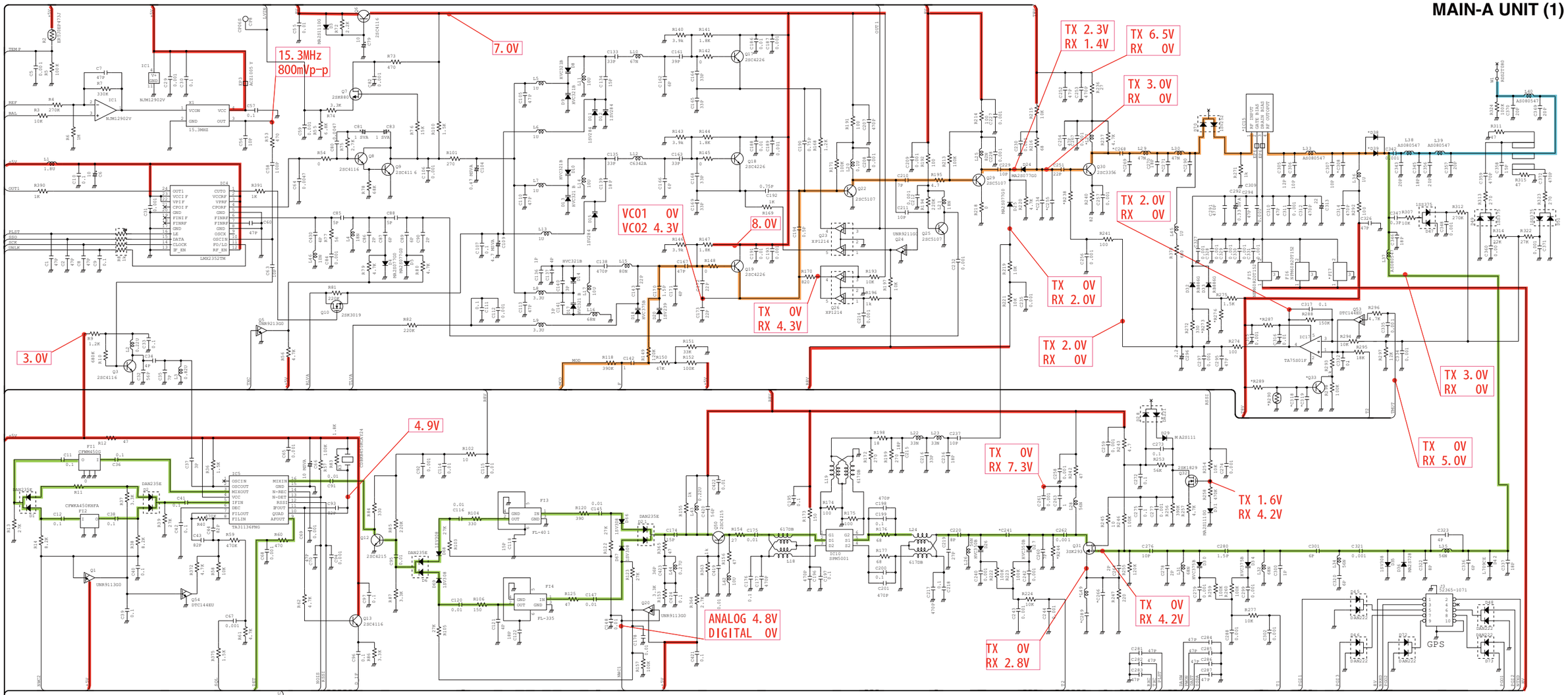

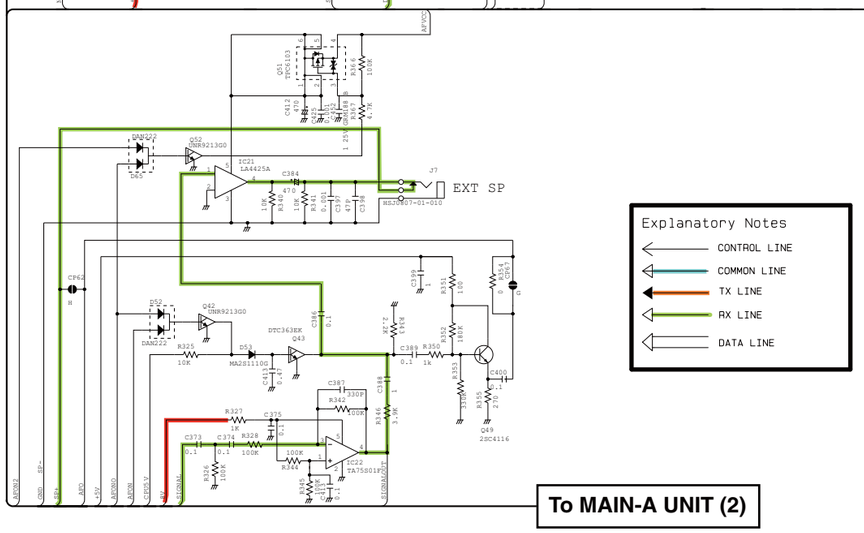

Explanatory Notes

- CONTROL LINE
- COMMON LINE
- TX LINE
- RX LINE
- DATA LINE

• **MDC compatible**

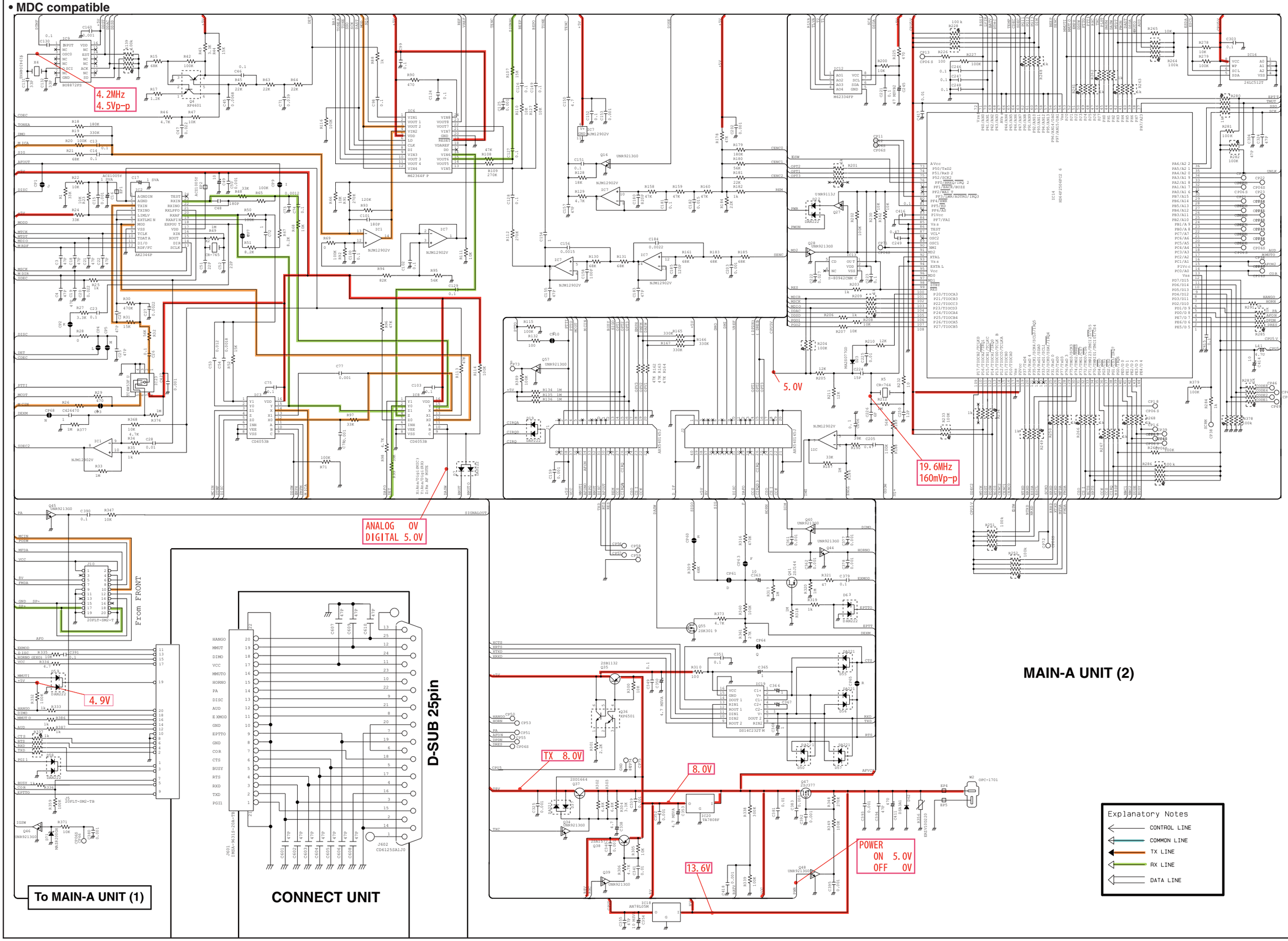

Jun. 2009

SERVICE MANUAL ADDENDUM

IC-F5061 IC-F5062 IC-F5063 IC-F5061D IC-F5062D

CONTENTS

PARTS LIST 1
BOARD LAYOUTS 14
VOLTAGE DIAGRAM 16

PARTS LIST

[VERSION LIST]

MODEL	VERSION	SYMBOL
IC-F5061	USA-01	[A]
	USA-02	[B]
IC-F5062	EUR-01	[C]
	EUR-02	[D]
IC-F5063	EXP-01	[E]
	EXP-02	[F]
IC-F5061D	USA-01	[G]
	USA-11	[H]
	USA-12	[I]
IC-F5062D	EUR-03	[J]

[MAIN UNIT] (Other than "MDC compatible")

REF NO.	PARTS NO.	DESCRIPTION			M.	H/V LOCATION
IC1	1110005340	S.IC	NJM12902V-TE1-#ZZZB		T	82.3/12.9
IC2	1110006221	S.IC	AK2346P-E2/P		B	44.7/11.7
IC3	1140013200	S.IC	CD4053BPWR		B	58.7/9.3
IC4	1130010100	S.IC	LMX2352TMX/NOPB		T	82.9/46
IC5	1110003491	S.IC	TA31136FNG(D,EL)		T	28/13.9
IC6	1190001350	S.IC	M62364FP 600D		B	84.9/12.9
IC7	1110005340	S.IC	NJM12902V-TE1-#ZZZB		T	108.5/43.7
IC8	1140013200	S.IC	CD4053BPWR		B	58.7/16.1
IC9	1130012960	S.IC	BU8872FS-E2		B	133.1/21.3
IC10	1190002051	S.IC	SPM5001-TL-E		B	33.8/36.9
IC12	1190001340	S.IC	M62334FP 600C		B	9.1/25.7
IC13	1110005771	S.IC	S-80942CNMC-G9CT2G		B	126/44.8
IC14	1140014550	S.IC	HD64F2506RFC26DV(EMPTY)		B	111.8/35.7
IC15	1150002073	IC	RA60H1317M-125	[A]		
	1150002042	IC	RA30H1317M-121	[E]		
	1150002042	IC	RA30H1317M-121	[C]		
IC16	1140012950	S.IC	24LC512T-I/SM		B	133.3/29
IC17	1110002751	S.IC	TA75S01F(TE85R,F)		T	54.1/70.4
IC18	1180000970	S.IC	AN78L05M-(E1)		B	113/65.3
IC19	1120002510	S.IC	DS14C232TM S		T	104.7/70.5
IC20	1180001251	S.IC	TA7808F(TE16L,Q)		B	121.5/65.8
IC21	1110003091	IC	LA4425A-E			
IC22	1110002751	S.IC	TA75S01F(TE85R,F)		B	135.5/54.4
IC23	1130006221	S.IC	TC4W53FU(TE12L,F)		B	106.9/9.6
Q1	1590003231	S.TRA	UNR9113G0L		B	15.2/6
Q3	1530002851	S.TRA	2SC4116-BL(TE85R,F)		B	36.4/15.5
Q4	1590001650	S.TRA	XP4601(TX)		B	92.8/12.4
Q5	1590003291	S.TRA	UNR9213G0L		B	76.7/50
Q6	1530002851	S.TRA	2SC4116-BL(TE85R,F)		T	63.2/55.1
Q7	1560000541	S.FET	2SK880-Y(T5RICOM,F)		B	81.2/27.1
Q8	1530002851	S.TRA	2SC4116-BL(TE85R,F)		B	79.2/31.8
Q9	1530002851	S.TRA	2SC4116-BL(TE85R,F)		B	81.7/31.8
Q10	1560001360	S.FET	2SK3019 TL		B	57/31.6
Q12	1530002601	S.TRA	2SC4215-O(TE85R,F)		T	26.9/20
Q13	1530002851	S.TRA	2SC4116-BL(TE85R,F)		B	31.8/9.9
Q16	1590003291	S.TRA	UNR9213G0L		T	113.2/47.6
Q17	1530002920	S.TRA	2SC4226-T1 R25		T	50.9/47.6
Q18	1530002920	S.TRA	2SC4226-T1 R25		T	61.6/42.6
Q19	1530002920	S.TRA	2SC4226-T1 R25		T	72.1/43
Q20	1590003231	S.TRA	UNR9113G0L		B	33.9/25.2
Q22	1530003311	S.TRA	2SC5107-O(TE85R,F)		T	58.1/46.3
Q23	1590001400	S.TRA	XP1214(TX)		B	55.7/40.9
Q24	1590003281	S.TRA	UNR9211G0L		B	55.8/38.2
Q25	1530003311	S.TRA	2SC5107-O(TE85R,F)		B	65.9/49.5
Q26	1590001400	S.TRA	XP1214(TX)		B	67.2/43.1
Q27	1590003231	S.TRA	UNR9113G0L		T	124.7/52
Q28	1590003291	S.TRA	UNR9213G0L		B	123.4/46.3
Q29	1530003311	S.TRA	2SC5107-O(TE85R,F)		B	53.5/51.2
Q30	1530000372	S.TRA	2SC3356-T1B R (R24)		B	65.5/66
Q31	1580000731	S.FET	3SK293(TE85L,F)		B	10.2/38.6
Q32	1560000841	S.FET	2SK1829(TE85R,F)		T	11/42.5
Q33	1530002851	S.TRA	2SC4116-BL(TE85R,F)	[A] only	T	47.5/69.4
Q34	1590003291	S.TRA	UNR9213G0L		T	83/67.4
Q35	1520000460	S.TRA	2SB1132 T100 R		T	100.1/57.9
Q36	1590001190	S.TRA	XP6501-(TX).AB		T	104.3/55.8
Q37	1540000550	S.TRA	2SD1664 T100Q		T	75.5/63.6
Q38	1510000920	S.TRA	2SA1577 T106 Q		T	39.3/21.3
Q39	1590003291	S.TRA	UNR9213G0L		T	42.6/21.3
Q40	1590003291	S.TRA	UNR9213G0L		T	104.1/51.9
Q41	1590001451	S.FET	2SJ144-GR (TE85R,F)		B	110.3/83.3
Q42	1590003291	S.TRA	UNR9213G0L		B	132.1/45
Q43	1590000990	S.TRA	DTC363EK T146		B	135.7/49
Q44	1590003291	S.TRA	UNR9213G0L		T	108.5/21.6
Q45	1590003291	S.TRA	UNR9213G0L		B	133.3/58.9
Q46	1590003291	S.TRA	UNR9213G0L		T	117.9/84.4
Q47	1550000100	S.FET	2SJ377 (TE16L1,NQ)		B	131.3/71.5
Q48	1590003291	S.TRA	UNR9213G0L		B	124.9/77.7
Q49	1530002851	S.TRA	2SC4116-BL(TE85R,F)		B	139.3/37.2
Q50	1530002601	S.TRA	2SC4215-O(TE85R,F)		T	40.6/39.2
Q51	1590003321	S.FET	TPC6103(TE85L,F)		B	133.6/63.4
Q52	1590003291	S.TRA	UNR9213G0L		B	128.2/61.1
Q53	1590000430	S.TRA	DTC144EUA T106		B	52.3/67.4
Q54	1590000430	S.TRA	DTC144EUA T106		T	25.5/6.3
Q55	1560001360	S.FET	2SK3019 TL		T	75.5/20.9
Q57	1590003291	S.TRA	UNR9213G0L		T	112/14.4
D1	1750001070	S.DIO	DAN235ETL		T	10.4/15.7
D2	1750001070	S.DIO	DAN235ETL		T	22.6/8.9
D3	1790001251	S.DIO	MA2S1110GL		T	61.3/55
D4	1790001261	S.DIO	MA2S077G0L		B	72.9/49.8
D5	1790001261	S.DIO	MA2S077G0L		B	71.1/51.3
D6	1750001070	S.DIO	DAN235ETL		T	30.6/20.8
D7	1160000140	S.DIO	DAP222 TL		T	58.9/14
D8	1720000791	S.VAR	HVC321B1TRF-E		T	49.5/32.4
D9	1720000791	S.VAR	HVC321B1TRF-E		T	52.7/32.4
D10	1720000791	S.VAR	HVC321B1TRF-E		T	60.5/30
D11	1720000641	S.VAR	1SV284(TPH3,F)		T	52.7/33.6
D12	1720000641	S.VAR	1SV284(TPH3,F)		T	52.7/34.8
D13	1720000791	S.VAR	HVC321B1TRF-E		T	63.8/28.6
D14	1720000791	S.VAR	HVC321B1TRF-E		T	73.6/30.4
D15	1720000641	S.VAR	1SV284(TPH3,F)		T	63.8/31.3
D17	1720000791	S.VAR	HVC321B1TRF-E		T	72.1/27.9
D18	1750000721	S.VAR	HVC375BTRF-E		T	69.8/33.3
D19	1160000140	S.DIO	DAP222 TL		B	120.5/17.8
D20	1720000471	S.VAR	1SV239(TPH3,F)		T	69.4/34.9

M.=Mounted side (T: Mounted on the Top side, B: Mounted on the Bottom side)
S.=Surface mount

[MAIN UNIT] (Other than "MDC compatible")

REF NO.	PARTS NO.	DESCRIPTION	M.	H/V LOCATION
D21	1750001070	S.DIO DAN235ETL	T	36.3/38.3
D22	1750000520	S.DIO DAN222TL	T	124.7/54.5
D23	1790001261	S.DIO MA2S077G0L	T	125.6/39.2
D24	1790001261	S.DIO MA2S077G0L	B	50.7/53.2
D25	1790001261	S.DIO MA2S077G0L	B	49.3/50.8
D26	1750000711	S.VAR HVC350BTRF-E	B	17.7/36
D27	1750000711	S.VAR HVC350BTRF-E	B	16.2/36
D28	1750000370	S.DIO DA221 TL	T	10/37.5
D29	1790001251	S.DIO MA2S1110GL	T	12/39.5
D30	1750000721	S.VAR HVC375BTRF-E	B	8.6/44.7
D31	1790001251	S.DIO MA2S1110GL	T	8.5/43.7
D32	1750001080	S.DIO RB886G T2R	T	64.1/76.5
D33	1750001080	S.DIO RB886G T2R	T	65.8/75.8
D34	1750000721	S.VAR HVC375BTRF-E	B	8.6/47.4
D35	1790001261	S.DIO MA2S077G0L	B	17.9/48.1
D36	1790001241	S.DIO MA2S7280GL [E]	B	16.5/48.1
	1790001241	S.DIO MA2S7280GL [C]		
D37	1750000370	S.DIO DA221 TL	T	75.5/67.6
D38	1750000511	S.DIO UX9401F-STD/TR <INT> [E]	T	30/66
	1750000511	S.DIO UX9401F-STD/TR <INT> [C]		
D39	1710001061	DIO L407CDB [A] only		
D42	1750001360	S.DIO L709CER (9401)	T	34.6/58.7
D45	1750000520	S.DIO DAN222TL	T	91.8/57.5
D46	1750000520	S.DIO DAN222TL	T	89.6/57.5
D47	1790001211	S.DIO 1SS375-TL-E	B	29.2/63.8
D48	1750000520	S.DIO DAN222TL	B	93/61.5
D49	1790001211	S.DIO 1SS375-TL-E	B	6/52.8
D50	1750000370	S.DIO DA221 TL	B	97.2/65.8
D51	1790001211	S.DIO 1SS375-TL-E	B	3.9/79.7
D52	1750000520	S.DIO DAN222TL	B	132.5/41
D53	1790001251	S.DIO MA2S1110GL	B	133.3/47.3
D55	1750000370	S.DIO DA221 TL	B	108.8/57.4
D56	1750000370	S.DIO DA221 TL	T	108.8/60.6
D57	1750000370	S.DIO DA221 TL	B	95.1/65.8
D58	1750000520	S.DIO DAN222TL	T	94/57.5
D59	1750000520	S.DIO DAN222TL	B	104/80.4
D62	1790000700	DIO DSA3A1		
D63	1750000520	S.DIO DAN222TL	B	110.3/80.9
D65	1750000520	S.DIO DAN222TL	B	129.7/58.9
D66	1790001621	S.DIO 1SV308(TPL3,F)	T	33.9/38.8
D67	1790001621	S.DIO 1SV308(TPL3,F)	T	33.9/37.5
D68	1790001621	S.DIO 1SV308(TPL3,F)	T	29.9/23.2
D69	1790001621	S.DIO 1SV308(TPL3,F)	T	31.2/23.2
D70	1750000351	S.DIO 1SV252(TE85L,F)	T	73.6/75.5
D71	1730002411	S.ZEN MAZ8200GHL	T	118.3/86.3
D72	1750000520	S.DIO DAN222TL	T	87.4/57.5
D73	1750000520	S.DIO DAN222TL	B	93/64.5
FI1	2020001410	CER CFWLB450KGFA-B0 (CFWM450G)		
FI2	2020002470	S.CER CFWKA450KHFA001-R0	T	15.4/9.3
FI3	2030000500	S.MON DSF753SBF 46.35 MHz (FL-401)	T	24.7/28.4
FI4	2030000150	S.MON DSF753SB 46.350 MHz (FL-335)	T	35.6/28.4
FI5	2040001440	S.LC NFE31PT152Z1E9L (NFM60R20T152)	B	94.5/77
FI6	2040001440	S.LC NFE31PT152Z1E9L (NFM60R20T152)	B	94.5/73.7
FI7	2040001440	S.LC NFE31PT152Z1E9L (NFM60R20T152) [A] only	B	94.5/70.3
X1	6050012380	S.XTA CR-826 DSA535SD 15.3 MHz	T	84.2/34.7
X2	6050011730	S.XTA CR-765 SMD-49TA 3.6864 MHz <KDS>	T	48.3/11.6
X3	6070000300	S.DIS JTBM450CX24 <JJE>	T	37.1/10.3
X4	6050012320	S.XTA CR-818 SMD-49 4.194304 MHz <KDS>	T	139.1/21.9
X5	6050011720	S.XTA CR-764 SMD-49TB 19.6608 MHz <KDS>	T	120.5/44.3
L1	6200004660	S.COI MLF1608A 1R8K-T	T	82.7/54.3
L2	6200003540	S.COI MLF1608D R22K-T	B	34.4/14.7
L3	6200004480	S.COI MLF1608D R82K-T	B	29.7/16.2
L4	6200007911	S.COI ELJRF 18NJFB	B	75.9/48.3
L5	6200007120	S.COI ELJND 1R0J	T	49.4/30.8
L6	6200007120	S.COI ELJND 1R0J	T	52.7/30.8
L7	6200007120	S.COI ELJND 1R0J	T	60.5/28.4
L8	6200007170	S.COI MLF1608A 3R3K-T	T	74/27.5
L9	6200007170	S.COI MLF1608A 3R3K-T	T	69.8/32
L10	6200010600	S.COI C6342A-67NG-A	T	51.2/39.2
L11	6200003640	S.COI MLF1608E 100K-T	T	48.3/33.6
L12	6200009910	S.COI C6342A-88NG-A	T	61.6/35.5
L13	6200007120	S.COI ELJND 1R0J	T	63.8/27
L14	6200003640	S.COI MLF1608E 100K-T	T	60/31.4
L15	6200012450	S.COI 0.25-1.9-8TL 73N (COAT) <COMO>	T	73.3/35.9
L16	6200008090	S.COI LQW2BHN68NJ03L	T	69.5/28
L17	6200003640	S.COI MLF1608E 100K-T	T	73.7/32.6
L18	6130003000	S.COI #617DB-1714=P3	B	39/36.2
L19	6130003000	S.COI #617DB-1714=P3	B	34.5/42.6
L20	6200009181	S.COI ELJRE R10JFA	T	57.3/48.3
L21	6200007911	S.COI ELJRF 18NJFB	B	66.3/51.2
L22	6200005721	S.COI ELJRE 33NGFA	B	40.6/48.1
L23	6200005721	S.COI ELJRE 33NGFA	B	45.5/48.1
L24	6130003000	S.COI #617DB-1714=P3	B	27/36.2
L25	6200009151	S.COI ELJRE 82NJFA	B	54.2/53.4
L26	6200010720	S.COI C2520C-56NG-A	B	20.9/37
L27	6200009181	S.COI ELJRE R10JFA	B	66.5/69.4
L28	6200010720	S.COI C2520C-56NG-A	B	11.7/35.1
L29	6200009171	S.COI ELJRE 47NJFA	B	70.5/70.8
L30	6200009171	S.COI ELJRE 47NJFA	T	72.6/72.7
L31	6200010730	S.COI C2520C-68NG-A	B	7.8/41.5
L32	6200010730	S.COI C2520C-68NG-A	B	9.9/50.6

[MAIN UNIT] (Other than "MDC compatible")

REF NO.	PARTS NO.	DESCRIPTION	M.	H/V LOCATION
L33	6200010050	S.COI AS080547-47N	T	33.3/73.9
L34	6200007750	S.COI LQW2BHN56NJ03L	B	13.2/51.7
L35	6200006991	S.COI ELJRE 56NGFA	B	20.1/50.7
L36	6200010420	S.COI FHW1210HC 1R0JGT <JJE>	B	39.2/66
L37	6200010050	S.COI AS080547-47N	T	30/58.5
L38	6200010050	S.COI AS080547-47N	T	21.6/58
L39	6200010050	S.COI AS080547-47N	T	12.5/57.5
L40	6200010050	S.COI AS080547-47N	T	10.5/81
L41	6200002861	S.COI NLV25T-4R7J	T	122.3/54.4
L42	6200005011	S.COI NLV25T-100J	T	40.7/42.1
L43	6200010680	S.COI C2520C-R22G-A (0.22U)	T	42.1/34.9
L44	6200010740	S.COI C2520C-R27G-A	T	37.8/35.3
L45	6200003960	S.COI MLF1608A 1R0K-T	T	71.3/72.7
L46	6200005661	S.COI ELJRE 10NGFA	T	78.3/42.3
R1	7030005060	S.RES ERJ2GEJ 333 X (33K)	B	38.1/5.8
R2	7510001730	S.THE ERTJOEP 473J	T	90.4/35.6
R3	7030005050	S.RES ERJ2GEJ 103 X (10K)	T	79/11.9
R4	7030005700	S.RES ERJ2GEJ 274 X (270K)	B	88.5/18.9
R5	7030005090	S.RES ERJ2GEJ 104 X (100K)	T	90.4/34
R6	7030005160	S.RES ERJ2GEJ 105 X (1M)	T	84/19.4
R7	7030005230	S.RES ERJ2GEJ 334 X (330K)	T	84/17.5
R8	7410001130	S.ARR EXB28V102JX	T	86.1/52.4
R9	7030007570	S.RES ERJ2GEJ 122 X (1.2K)	B	34.3/11.6
R10	7030007060	S.RES ERJ2GEJ 684X (680K)	B	35.8/13.7
R11	7030010040	S.RES ERJ2GEJ-JPW	T	8.5/9.2
R12	7030004970	S.RES ERJ2GEJ 470 X (47)	T	31/17.2
R13	7030005600	S.RES ERJ2GEJ 273 X (27K)	T	8.8/15.9
R14	7030005210	S.RES ERJ2GEJ 822 X (8.2K)	T	7.5/7.4
R15	7030005070	S.RES ERJ2GEJ 683 X (68K)	B	93.3/14.4
R17	7030007570	S.RES ERJ2GEJ 122 X (1.2K)	B	93.3/15.3
R18	7030008300	S.RES ERJ2GEJ 184 X (180K)	B	79/11.8
R19	7030005230	S.RES ERJ2GEJ 334 X (330K)	T	89.3/9
R20	7030005090	S.RES ERJ2GEJ 104 X (100K)	T	85.6/8.3
R21	7030005070	S.RES ERJ2GEJ 683 X (68K)	T	86.6/8.3
R22	7030005050	S.RES ERJ2GEJ 103 X (10K)	B	38.1/7.5
R23	7030005050	S.RES ERJ2GEJ 103 X (10K)	B	38.1/9.2
R24	7030005060	S.RES ERJ2GEJ 333 X (33K)	B	37.2/10.5
R25	7030005120	S.RES ERJ2GEJ 102 X (1K)	B	100.9/51.4
R26	7030005000	S.RES ERJ2GEJ 471 X (470)	B	87.5/5.3
R27	7030007300	S.RES ERJ2GEJ 332 X (3.3K)	T	53.9/5.6
R28	7030010040	S.RES ERJ2GEJ-JPW	T	59.4/5.6
R29	7030005000	S.RES ERJ2GEJ 471 X (470)	T	116.4/14.5
R30	7030005170	S.RES ERJ2GEJ 474 X (470K)	B	37.2/9.2
R31	7030007340	S.RES ERJ2GEJ 153 X (15K)	B	36.3/9.2
R32	7030005720	S.RES ERJ2GEJ 563 X (56K)	B	37.2/7.5
R33	7030005160	S.RES ERJ2GEJ 105 X (1M)	T	80.7/8.4
R34	7030005040	S.RES ERJ2GEJ 472 X (4.7K)	T	80.7/7.2
R35	7030005120	S.RES ERJ2GEJ 102 X (1K)	T	77.6/9.5
R36	7030005030	S.RES ERJ2GEJ 152 X (1.5K)	B	27/14.7
R37	7030007300	S.RES ERJ2GEJ 332 X (3.3K)	B	15.2/8.6
R38	7030005210	S.RES ERJ2GEJ 822 X (8.2K)	T	22.9/6.2
R39	7030005600	S.RES ERJ2GEJ 273 X (27K)	T	24/9.1
R40	7030005170	S.RES ERJ2GEJ 474 X (470K)	T	25.9/10.6
R41	7030007290	S.RES ERJ2GEJ 222 X (2.2K)	T	27.6/6.2
R42	7030005090	S.RES ERJ2GEJ 104 X (100K)	B	94.8/11.7
R43	7030007300	S.RES ERJ2GEJ 332 X (3.3K)	B	94.8/10
R44	7030007340	S.RES ERJ2GEJ 153 X (15K)	B	90.7/11.9
R45	7030005220	S.RES ERJ2GEJ 223 X (22K)	B	92.8/10
R46	7030005040	S.RES ERJ2GEJ 472 X (4.7K)	T	92.1/14.1
R47	7030005050	S.RES ERJ2GEJ 103 X (10K)	T	92.1/13.1
R48	7030005060	S.RES ERJ2GEJ 333 X (33K)	B	50.9/8.6
R49	7030005160	S.RES ERJ2GEJ 105 X (1M)	B	49.7/13.7
R50	7030005090	S.RES ERJ2GEJ 104 X (100K)	B	49.7/11
R51	7030005210	S.RES ERJ2GEJ 822 X (8.2K)	T	52.4/7
R52	7030007340	S.RES ERJ2GEJ 153 X (15K)	T	59.1/12.5
R53	7030005000	S.RES ERJ2GEJ 471 X (470)	T	86.2/37.7
R54	7030010040	S.RES ERJ2GEJ-JPW	B	78.7/36.4
R55	7030005290	S.RES ERJ2GEJ 682 X (6.8K)	T	81.8/25.3
R56	7030005040	S.RES ERJ2GEJ 472 X (4.7K)	B	77.7/48.4
R57	7030005090	S.RES ERJ2GEJ 104 X (100K)	B	28.3/14.3
R58	7030005050	S.RES ERJ2GEJ 103 X (10K)	T	27.6/9
R59	7030005170	S.RES ERJ2GEJ 474 X (470K)	T	27.6/8.1
R60	7030005000	S.RES ERJ2GEJ 471 X (470)	T	30.9/10.2
R61	7030005040	S.RES ERJ2GEJ 472 X (4.7K)	T	28.8/8.5
R62	7030005040	S.RES ERJ2GEJ 472 X (4.7K)	B	32.2/11.9
R63	7030005220	S.RES ERJ2GEJ 223 X (22K)	B	92.8/8.3
R64	7030005220	S.RES ERJ2GEJ 223 X (22K)	B	92.8/6.5
R65	7030005090	S.RES ERJ2GEJ 104 X (100K)	B	50.9/9.5
R66	7030005050	S.RES ERJ2GEJ 103 X (10K)	T	86.6/11.8
R67	7030005210	S.RES ERJ2GEJ 822 X (8.2K)	T	53.4/7
R68	7030007290	S.RES ERJ2GEJ 222 X (2.2K)	B	53.7/17.9
R69	7030010040	S.RES ERJ2GEJ-JPW	T	85.6/13.6
R71	7030005090	S.RES ERJ2GEJ 104 X (100K)	T	57.7/6.3
R72	7030007290	S.RES ERJ2GEJ 222 X (2.2K)	T	64.9/55.6
R73	7030005000	S.RES ERJ2GEJ 471 X (470)	B	83.2/26.9
R74	7030007300	S.RES ERJ2GEJ 332 X (3.3K)	B	81.8/25.3
R75	7030009140	S.RES ERJ2GEJ 272 X (2.7K)	B	79.2/34
R76	7030007340	S.RES ERJ2GEJ 153 X (15K)	B	80.3/29.1
R77	7030005580	S.RES ERJ2GEJ 560 X (56)	T	78.2/47.2
R78	7030005070	S.RES ERJ2GEJ 683 X (68K)	B	81.5/34
R79	7030005040	S.RES ERJ2GEJ 472 X (4.7K)	B	74.8/50
R80	7030005040	S.RES ERJ2GEJ 472 X (4.7K)	B	70/50.9
R81	7030005110	S.RES ERJ2GEJ 224 X (220K)	B	55.5/31.4
R82	7030005110	S.RES ERJ2GEJ 224 X (220K)	B	66.3/33.3
R83	7030008400	S.RES ERJ2GEJ 182 X (1.8K)	T	32.6/10.2
R84	7030007280	S.RES ERJ2GEJ 331 X (330)	T	24.6/20.3
R85	7030005110	S.RES ERJ2GEJ 224 X (220K)	T	24.6/21.2
R86	7030007300	S.RES ERJ2GEJ 332 X (3.3K)	B	30/10.5
R87	7030007300	S.RES ERJ2GEJ 332 X (3.3K)	T	32.2/20.6
R88	7030005120	S.RES ERJ2GEJ 102 X (1K)	B	91.7/6.5
R90	7030005000	S.RES ERJ2GEJ 471 X (470)	B	89.4/18.9
R91	7030005700	S.RES ERJ2GEJ 274 X (270K)	T	85.6/11.8
R92	7030005090	S.RES ERJ2GEJ 104 X (100K)	T	87.3/13.4

M.=Mounted side (T: Mounted on the Top side, B: Mounted on the Bottom side)
S.=Surface mount

[MAIN UNIT] (Other than "MDC compatible")

REF NO.	PARTS NO.	DESCRIPTION	M.	H/V LOCATION
R93	7030005310	S.RES ERJ2GEJ 124 X (120K)	T	83.9/8.2
R94	7030005080	S.RES ERJ2GEJ 823 X (82K)	T	108/34.7
R95	7030005720	S.RES ERJ2GEJ 563 X (56K)	T	108/33.8
R96	7030005240	S.RES ERJ2GEJ 473 X (47K)	B	63.7/15.5
R97	7030005060	S.RES ERJ2GEJ 333 X (33K)	B	53.3/16.6
R98	7030005040	S.RES ERJ2GEJ 472 X (4.7K)	B	62.1/19.4
R99	7030005240	S.RES ERJ2GEJ 473 X (47K)	B	60.2/19.4
R100	7030005030	S.RES ERJ2GEJ 152 X (1.5K)	B	77.9/34.4
R101	7030008280	S.RES ERJ2GEJ 271 X (270)	B	79.2/29.1
R102	7030005530	S.RES ERJ2GEJ 100 X (10)	T	23/20.3
R103	7030005600	S.RES ERJ2GEJ 273 X (27K)	B	29.9/23.8
R104	7030007280	S.RES ERJ2GEJ 331 X (330)	T	26.9/22.6
R105	7030005600	S.RES ERJ2GEJ 273 X (27K)	B	30.9/23.8
R106	7030007270	S.RES ERJ2GEJ 151 X (150)	T	34.3/22.5
R107	7030007340	S.RES ERJ2GEJ 153 X (15K)	B	129.7/52.3
R108	7030005240	S.RES ERJ2GEJ 473 X (47K)	B	82.3/18.9
R109	7030005700	S.RES ERJ2GEJ 274 X (270K)	B	81.3/18.9
R110	7030005050	S.RES ERJ2GEJ 103 X (10K)	T	78.4/20.2
R111	7030005050	S.RES ERJ2GEJ 103 X (10K)	T	95.9/28.3
R112	7030005700	S.RES ERJ2GEJ 274 X (270K)	T	80.8/20.1
R113	7030005240	S.RES ERJ2GEJ 473 X (47K)	B	57.9/19.4
R114	7030005090	S.RES ERJ2GEJ 104 X (100K)	B	53.7/13.3
R115	7030005090	S.RES ERJ2GEJ 104 X (100K)	T	114.4/18.4
R116	7030005090	S.RES ERJ2GEJ 104 X (100K)	B	85.3/7.3
R118	7030006610	S.RES ERJ2GEJ 394 X (390K)	T	89.5/11.7
R120	7030009280	S.RES ERJ2GEJ 391 X	T	30.3/34.3
R122	7030005600	S.RES ERJ2GEJ 273 X (27K)	T	32.3/35.2
R123	7030005600	S.RES ERJ2GEJ 273 X (27K)	T	33.5/35.2
R125	7030004970	S.RES ERJ2GEJ 470 X (47)	T	35/34
R127	7030005050	S.RES ERJ2GEJ 103 X (10K)	B	79.1/18.3
R128	7030008290	S.RES ERJ2GEJ 183 X (18K)	T	112.1/45.1
R129	7030005040	S.RES ERJ2GEJ 472 X (4.7K)	T	112.1/44.1
R130	7030005070	S.RES ERJ2GEJ 683 X (68K)	T	104.9/43.2
R131	7030005070	S.RES ERJ2GEJ 683 X (68K)	T	104.9/44.1
R132	7030004980	S.RES ERJ2GEJ 101 X (100)	T	114.4/17.5
R134	7030005160	S.RES ERJ2GEJ 105 X (1M)	T	128.9/26.3
R135	7030005160	S.RES ERJ2GEJ 105 X (1M)	T	128.9/25.3
R136	7030005160	S.RES ERJ2GEJ 105 X (1M)	T	128.9/24.2
R139	7410001140	S.ARR EXB28V104JX	T	130.6/20.6
R140	7030011000	S.RES RR0510P-392-D (3.9K)	T	48.1/47.2
R141	7030008340	S.RES RR0510P-182-D (1.8K)	T	50.8/45.4
R142	7030010040	S.RES ERJ2GEJ-JPW	T	49/47.2
R143	7030011000	S.RES RR0510P-392-D (3.9K)	T	58.7/42.2
R144	7030008340	S.RES RR0510P-182-D (1.8K)	T	61.7/40.4
R145	7030010040	S.RES ERJ2GEJ-JPW	T	59.6/42.2
R146	7030011000	S.RES RR0510P-392-D (3.9K)	T	71.8/45.8
R147	7030008340	S.RES RR0510P-182-D (1.8K)	T	70/41.9
R148	7030010040	S.RES ERJ2GEJ-JPW	T	71.8/44.9
R149	7030005310	S.RES ERJ2GEJ 124 X (120K)	T	69.1/36.3
R150	7030005240	S.RES ERJ2GEJ 473 X (47K)	T	89.8/15.5
R151	7030005060	S.RES ERJ2GEJ 333 X (33K)	T	91/16.1
R152	7030005090	S.RES ERJ2GEJ 104 X (100K)	T	88.9/16.4
R153	7030007300	S.RES ERJ2GEJ 332 X (3.3K)	T	39.9/32.2
R154	7030009530	S.RES ERJ2GEJ 270 X (27)	T	42.9/40.1
R155	7030005120	S.RES ERJ2GEJ 102 X (1K)	T	41.7/32.4
R156	7030004970	S.RES ERJ2GEJ 470 X (47)	T	42.5/41.3
R157	7030005090	S.RES ERJ2GEJ 104 X (100K)	B	33.7/23.6
R158	7030005240	S.RES ERJ2GEJ 473 X (47K)	T	112.1/42.3
R159	7030005240	S.RES ERJ2GEJ 473 X (47K)	T	112.1/40.5
R160	7030005240	S.RES ERJ2GEJ 473 X (47K)	T	113.8/38.7
R161	7030005070	S.RES ERJ2GEJ 683 X (68K)	T	104.9/46.8
R162	7030005240	S.RES ERJ2GEJ 473 X (47K)	T	128.2/14.4
R163	7030005240	S.RES ERJ2GEJ 473 X (47K)	T	128.7/16.3
R164	7030005240	S.RES ERJ2GEJ 473 X (47K)	T	129.4/14.4
R165	7030005230	S.RES ERJ2GEJ 334 X (330K)	T	128.7/17.8
R166	7030005230	S.RES ERJ2GEJ 334 X (330K)	T	128.7/18.7
R167	7030005230	S.RES ERJ2GEJ 334 X (330K)	T	129.8/16.2
R168	7030006581	S.RES ERA3YED 122V (1.2K)	T	53.6/47.5
R169	7030007230	S.RES ERA3YED 102V (1K)	T	63.8/42.6
R170	7030010390	S.RES ERA3YED 821V (820)	T	74.1/43.2
R171	7030005090	S.RES ERJ2GEJ 104 X (100K)	T	56.3/46.7
R172	7030008280	S.RES ERJ2GEJ 271 X (270)	B	36.4/46.4
R173	7030007270	S.RES ERJ2GEJ 151 X (150)	B	39/31.2
R174	7030004980	S.RES ERJ2GEJ 101 X (100)	B	34.6/38.7
R175	7030004980	S.RES ERJ2GEJ 101 X (100)	B	33/38.7
R176	7030005590	S.RES ERJ2GEJ 680 X (68)	B	31.3/37.4
R177	7030005590	S.RES ERJ2GEJ 680 X (68)	B	31.3/34.9
R178	7030005240	S.RES ERJ2GEJ 473 X (47K)	T	113.8/37.8
R179	7030008300	S.RES ERJ2GEJ 184 X (180K)	T	117.6/34.6
R180	7030005720	S.RES ERJ2GEJ 563 X (56K)	T	118.3/35.3
R181	7030005220	S.RES ERJ2GEJ 223 X (22K)	T	119/36
R182	7030005120	S.RES ERJ2GEJ 102 X (1K)	T	116.9/33.9
R183	7030005070	S.RES ERJ2GEJ 683 X (68K)	T	103.1/46.8
R184	7030005220	S.RES ERJ2GEJ 223 X (22K)	T	113.8/36.9
R185	7030005070	S.RES ERJ2GEJ 683 X (68K)	B	102.3/45.6
R186	7030005160	S.RES ERJ2GEJ 105 X (1M)	T	81.8/18.9
R187	7030005060	S.RES ERJ2GEJ 333 X (33K)	T	80.6/17.5
R188	7030005090	S.RES ERJ2GEJ 104 X (100K)	T	78.5/14.9
R189	7030005720	S.RES ERJ2GEJ 563 X (56K)	T	78.5/15.8
R190	7030007350	S.RES ERJ2GEJ 393 X (39K)	T	80.6/18.4
R191	7030004980	S.RES ERJ2GEJ 101 X (100)	T	60.5/47
R192	7030004980	S.RES ERJ2GEJ 101 X (100)	B	66.3/53.2
R193	7030005050	S.RES ERJ2GEJ 103 X (10K)	B	66.3/45.2
R194	7030005110	S.RES ERJ2GEJ 224 X (220K)	B	62.7/50.8
R195	7030009320	S.RES ERJ2GEJ 4R7 X (4.7)	B	55.8/50.3
R196	7030005120	S.RES ERJ2GEJ 102 X (1K)	B	65.2/42.8
R197	7030005050	S.RES ERJ2GEJ 103 X (10K)	B	64.7/44.5
R198	7030010090	S.RES ERJ2GEJ 180 X (18)	B	36/47.6
R199	7030008280	S.RES ERJ2GEJ 271 X (270)	B	37.3/47.6
R200	7030005050	S.RES ERJ2GEJ 103 X (10K)	B	8.4/20.6
R201	7410001130	S.ARR EXB28V102JX	B	117/51.7
R202	7030005090	S.RES ERJ2GEJ 104 X (100K)	B	122.5/44.8
R203	7030005120	S.RES ERJ2GEJ 102 X (1K)	B	127.4/47.3
R204	7410000750	S.ARR EXB-V4V 104JV (100K)	B	129.6/42.7
R205	7030008010	S.RES ERJ2GEJ 123 X (12K)	T	127.5/40.1

[MAIN UNIT] (Other than "MDC compatible")

REF NO.	PARTS NO.	DESCRIPTION	M.	H/V LOCATION
R206	7030005120	S.RES ERJ2GEJ 102 X (1K)	B	127/39.5
R207	7030005050	S.RES ERJ2GEJ 103 X (10K)	T	120.9/37.5
R208	7030005050	S.RES ERJ2GEJ 103 X (10K)	T	121.6/38.2
R209	7410001130	S.ARR EXB28V102JX	B	125.8/40.8
R210	7030008010	S.RES ERJ2GEJ 123 X (12K)	T	124.2/38.4
R211	7030008010	S.RES ERJ2GEJ 123 X (12K)	T	125.9/41.1
R212	7030005160	S.RES ERJ2GEJ 105 X (1M)	T	122.1/41.1
R213	7030005090	S.RES ERJ2GEJ 104 X (100K)	B	55.3/51.8
R214	7030004980	S.RES ERJ2GEJ 101 X (100)	B	56.4/54
R215	7030005050	S.RES ERJ2GEJ 103 X (10K)	B	63.5/61.3
R216	7030005590	S.RES ERJ2GEJ 680 X (68)	B	61.9/62.3
R218	7030010040	S.RES ERJ2GEJ-JPW	B	56.4/51.8
R219	7030005050	S.RES ERJ2GEJ 103 X (10K)	B	46/49.8
R220	7030005040	S.RES ERJ2GEJ 472 X (4.7K)	B	49.3/52
R221	7030005050	S.RES ERJ2GEJ 103 X (10K)	B	44.4/49.8
R222	7030005090	S.RES ERJ2GEJ 104 X (100K)	B	17.7/33.9
R223	7030005090	S.RES ERJ2GEJ 104 X (100K)	B	16.2/33.9
R224	7030005050	S.RES ERJ2GEJ 103 X (10K)	B	15.7/32.7
R225	7030005000	S.RES ERJ2GEJ 471 X (470)	B	8/19.2
R226	7030004980	S.RES ERJ2GEJ 101 X (100)	T	109.7/53.5
R227	7030005090	S.RES ERJ2GEJ 104 X (100K)	B	107.1/49.3
R228	7410001140	S.ARR EXB28V104JX	T	103.3/49
R230	7030005050	S.RES ERJ2GEJ 103 X (10K)	B	124.7/42.7
R232	7030005530	S.RES ERJ2GEJ 100 X (10)	T	120.4/41.1
R233	7410000750	S.ARR EXB-V4V 104JV (100K)	T	130/34.7
R234	7410001130	S.ARR EXB28V102JX	B	129.4/34.4
R236	7030009530	S.RES ERJ2GEJ 270 X (27)	B	63.9/71.5
R237	7030005040	S.RES ERJ2GEJ 472 X (4.7K)	B	65.3/69.7
R238	7030008010	S.RES ERJ2GEJ 123 X (12K)	B	61.9/65.1
R240	7030005570	S.RES ERJ2GEJ 820 X (82)	B	62.4/67.4
R241	7030004980	S.RES ERJ2GEJ 101 X (100)	B	58.5/66
R242	7030004970	S.RES ERJ2GEJ 470 X (47)	T	12/33.1
R243	7030009320	S.RES ERJ2GEJ 4R7 X (4.7)	T	10/36
R244	7030005000	S.RES ERJ2GEJ 471 X (470)	B	15.1/36.3
R245	7030005530	S.RES ERJ2GEJ 100 X (10)	B	11.9/39.9
R246	7030005090	S.RES ERJ2GEJ 104 X (100K)	B	7.5/38.6
R247	7030004990	S.RES ERJ2GEJ 221 X (220)	B	7.7/36.3
R248	7410001130	S.ARR EXB28V102JX	B	103.9/47.9
R249	7410001130	S.ARR EXB28V102JX	B	123.9/27.6
R250	7410001130	S.ARR EXB28V102JX	B	122.1/25.7
R251	7410001140	S.ARR EXB28V104JX	T	124.7/28.7
R252	7410001140	S.ARR EXB28V104JX	T	122.1/25.7
R253	7030005720	S.RES ERJ2GEJ 563 X (56K)	T	9.5/40.5
R254	7030005050	S.RES ERJ2GEJ 103 X (10K)	T	7.4/42.2
R255	7030005310	S.RES ERJ2GEJ 124 X (120K)	B	6.6/38.6
R256	7030006610	S.RES ERJ2GEJ 394 X (390K)	T	13/41
R257	7030005040	S.RES ERJ2GEJ 472 X (4.7K)	T	9/42.2
R258	7030005170	S.RES ERJ2GEJ 474 X (470K)	T	11/44.5
R259	7030005090	S.RES ERJ2GEJ 104 X (100K)	B	6/45.1
R260	7030005090	S.RES ERJ2GEJ 104 X (100K)	B	6/47
R261	7410001130	S.ARR EXB28V102JX	B	99.7/43.5
R262	7410001130	S.ARR EXB28V102JX	T	100.2/37.4
R263	7410001130	S.ARR EXB28V102JX	B	97/40.7
R264	7410001140	S.ARR EXB28V104JX	T	103.8/37
R265	7030005050	S.RES ERJ2GEJ 103 X (10K)	T	103.8/39.2
R266	7410001130	S.ARR EXB28V102JX	B	120.1/23.5
R267	7410001130	S.ARR EXB28V102JX	B	118.3/21.7
R268	7410001130	S.ARR EXB28V102JX	B	116.5/19.9
R269	7030005090	S.RES ERJ2GEJ 104 X (100K)	T	119.4/20.8
R271	7030004980	S.RES ERJ2GEJ 101 X (100)	T	77.6/78.5
R272	7030007280	S.RES ERJ2GEJ 331 X (330)	T	61/76.5
R273	7030005050	S.RES ERJ2GEJ 103 X (10K) [E]	T	62.3/76.1
	7030005050	S.RES ERJ2GEJ 103 X (10K) [C]		
R274	7030004980	S.RES ERJ2GEJ 101 X (100)	T	56.7/69.3
R275	7030005030	S.RES ERJ2GEJ 152 X (1.5K)	T	64.8/73.8
R276	7030007300	S.RES ERJ2GEJ 332 X (3.3K) [A]	T	65.8/73.8
	7030005040	S.RES ERJ2GEJ 472 X (4.7K) [E]		
	7030005040	S.RES ERJ2GEJ 472 X (4.7K) [C]		
R277	7030005050	S.RES ERJ2GEJ 103 X (10K)	B	4.8/45.6
R278	7030005050	S.RES ERJ2GEJ 103 X (10K)	T	132.2/29.9
R279	7030005090	S.RES ERJ2GEJ 104 X (100K)	T	131.3/29.9
R280	7410001130	S.ARR EXB28V102JX	B	95.2/38.9
R281	7030005090	S.RES ERJ2GEJ 104 X (100K)	T	93.7/48.8
R282	7410000750	S.ARR EXB-V4V 104JV (100K)	T	97.2/45.3
R283	7410001130	S.ARR EXB28V102JX	T	103.1/21.7
R284	7030005120	S.RES ERJ2GEJ 102 X (1K)	T	111.2/25.1
R285	7410001130	S.ARR EXB28V102JX	B	107.1/19.9
R286	7410001140	S.ARR EXB28V104JX	T	121.7/22.2
R287	7030005580	S.RES ERJ2GEJ 560 X (56) [A]	T	55.7/72.6
	7030004990	S.RES ERJ2GEJ 221 X (220) [E]		
	7030004990	S.RES ERJ2GEJ 221 X (220) [C]		
R288	7030005100	S.RES ERJ2GEJ 154 X (150K)	T	54.1/68.2
R289	7030005170	S.RES ERJ2GEJ 474 X (470K) [A] only	B	38/63.7
R290	7520000260	S.POS PRF18BB471QB1RB [A] only	T	33.9/63
R291	7030005120	S.RES ERJ2GEJ 102 X (1K)	T	109.2/24.5
R292	7030006070	S.RES ERJ12YJ101U (100)	B	43.6/66.1
R293	7030005120	S.RES ERJ2GEJ 102 X (1K)	T	50.6/70.5
R294	7030005050	S.RES ERJ2GEJ 103 X (10K)	T	51.7/68.2
R295	7030008290	S.RES ERJ2GEJ 183 X (18K)	T	50.6/71.4
R296	7030005040	S.RES ERJ2GEJ 472 X (4.7K)	T	53.8/64.2
R297	7030008010	S.RES ERJ2GEJ 123 X (12K)	T	50.5/68.6
R298	7030005090	S.RES ERJ2GEJ 104 X (100K)	T	45.6/69.9
R300	7030005050	S.RES ERJ2GEJ 103 X (10K)	B	99.9/59.6
R301	7030007290	S.RES ERJ2GEJ 222 X (2.2K)	T	106.2/55.6
R302	7030000480	S.RES MCR10EZHJ 6.8K (682)	T	79/64.4
R303	7030000480	S.RES MCR10EZHJ 6.8K (682)	T	80.9/64.4
R304	7030000440	S.RES MCR10EZHJ 3.3K (332)	T	82.8/64.4
R305	7030005050	S.RES ERJ2GEJ 103 X (10K)	T	40.3/19.4
R306	7030005040	S.RES ERJ2GEJ 472 X (4.7K)	T	41/21.7
R307	7030005050	S.RES ERJ2GEJ 103 X (10K)	B	27/63
R309	7030005070	S.RES ERJ2GEJ 683 X (68K)	T	89.9/7.2
R310	7030004980	S.RES ERJ2GEJ 101 X (100)	B	109.3/62.8
R311	7030000220	S.RES MCR10EZHJ 47 (470)	B	15/76.9
R312	7030005700	S.RES ERJ2GEJ 274 X (270K)	B	31.5/62.4
R313	7030003370	S.RES ERJ3GEYJ 271 V (270)	B	8.6/54

M.=Mounted side (T: Mounted on the Top side, B: Mounted on the Bottom side)
S.=Surface mount

[MAIN UNIT] (Other than "MDC compatible")

REF NO.	PARTS NO.	DESCRIPTION	M.	H/V LOCATION
R314	7030005600	S.RES ERJ2GEJ 273 X (27K)	B	3/53
R315	7030000220	S.RES MCR10EZHJ 47 (470)	B	3.5/57.4
R316	7030005170	S.RES ERJ2GEJ 474 X (470K)	T	90.8/11.3
R317	7030005160	S.RES ERJ2GEJ 105 X (1M)	B	108.3/83.7
R318	7030005160	S.RES ERJ2GEJ 105 X (1M)	B	112.5/82.7
R319	7030005120	S.RES ERJ2GEJ 102 X (1K)	B	112.1/81.5
R320	7030005160	S.RES ERJ2GEJ 105 X (1M)	B	107.2/82.4
R321	7030004970	S.RES ERJ2GEJ 470 X (47)	B	108.4/82
R322	7030005600	S.RES ERJ2GEJ 273 X (27K)	B	2.1/79.2
R323	7030003370	S.RES ERJ3GEYJ 271 V (270)	B	6.3/78.7
R324	7030000620	S.RES MCR10EZHJ 100 K (104)	B	5.6/85.5
R325	7030005050	S.RES ERJ2GEJ 103 X (10K)	B	130.5/45.2
R326	7030005090	S.RES ERJ2GEJ 104 X (100K)	B	131.8/51.7
R327	7030007290	S.RES ERJ2GEJ 222 X (2.2K)	B	131.1/54.2
R328	7030005090	S.RES ERJ2GEJ 104 X (100K)	B	134.2/51.7
R332	7030005090	S.RES ERJ2GEJ 104 X (100K)	T	109.6/27.9
R333	7030005120	S.RES ERJ2GEJ 102 X (1K)	T	109.6/26.9
R334	7030000100	S.RES MCR10EZHJ 4.7 (4R7)	T	101.4/79.7
R335	7030005050	S.RES ERJ2GEJ 103 X (10K)	T	101.8/83.9
R336	7030005120	S.RES ERJ2GEJ 102 X (1K)	T	111.3/78.5
R337	7410001130	S.ARR EXB28V102JX	T	104.6/75.9
R338	7030005651	S.RES ERA3YKD 304V (300K)	T	113.6/54.3
R339	7030005871	S.RES ERA3YKD 104V (100K)	T	113.6/52.9
R340	7030003560	S.RES ERJ3GEYJ 103 V (10K)	T	136.3/65.7
R341	7030003560	S.RES ERJ3GEYJ 103 V (10K)	B	130.7/85.9
R342	7030005090	S.RES ERJ2GEJ 104 X (100K)	B	135.4/52.2
R343	7030007290	S.RES ERJ2GEJ 222 X (2.2K)	B	138.2/49.4
R344	7030005110	S.RES ERJ2GEJ 224 X (220K)	B	133.3/54.6
R345	7030005110	S.RES ERJ2GEJ 224 X (220K)	B	133.3/56.3
R346	7030008410	S.RES ERJ2GEJ 392 X (3.9K)	B	137/52.2
R347	7030005050	S.RES ERJ2GEJ 103 X (10K)	B	137.8/53.7
R348	7030005700	S.RES ERJ2GEJ 274 X (270K)	B	129.1/77.2
R349	7030005090	S.RES ERJ2GEJ 104 X (100K)	B	127.8/77.7
R350	7030005120	S.RES ERJ2GEJ 102 X (1K)	B	139.1/47.8
R351	7030004980	S.RES ERJ2GEJ 101 X (100)	B	136.3/38.1
R352	7030008300	S.RES ERJ2GEJ 184 X (180K)	B	139.7/39
R353	7030005230	S.RES ERJ2GEJ 334 X (330K)	B	138.2/47.8
R354	7030010040	S.RES ERJ2GEJ-JPW	T	140.4/36
R355	7030008280	S.RES ERJ2GEJ 271 X (270)	B	139.7/34.3
R356	7540000290	ABS ERZV10D220		
R359	7030005090	S.RES ERJ2GEJ 104 X (100K)	B	114.8/82.9
R360	7030005090	S.RES ERJ2GEJ 104 X (100K)	T	80.6/5.3
R361	7030005600	S.RES ERJ2GEJ 273 X (27K)	T	78.4/5.3
R362	7030005050	S.RES ERJ2GEJ 103 X (10K)	T	124.8/50.2
R363	7030005120	S.RES ERJ2GEJ 102 X (1K)	T	42.9/38.3
R364	7030009140	S.RES ERJ2GEJ 272 X (2.7K)	T	42.9/37.4
R365	7030004970	S.RES ERJ2GEJ 470 X (47)	T	38.3/37.9
R366	7030005050	S.RES ERJ2GEJ 103 X (10K)	B	131.4/63.4
R367	7030005000	S.RES ERJ2GEJ 471 X (470)	B	130.1/63
R368	7030005050	S.RES ERJ2GEJ 103 X (10K)	T	78.3/7.6
R370	7030005010	S.RES ERJ2GEJ 681 X (680)	T	71.2/70.4
R371	7030005050	S.RES ERJ2GEJ 103 X (10K)	T	119.5/84.6
R372	7030005040	S.RES ERJ2GEJ 472 X (4.7K)	T	25.9/8.1
R373	7030005040	S.RES ERJ2GEJ 472 X (4.7K)	T	74/21.6
R375	7030005030	S.RES ERJ2GEJ 152 X (1.5K)	T	27.6/5.3
R376	7030005160	S.RES ERJ2GEJ 105 X (1M)	B	109.1/12.1
R377	7030005160	S.RES ERJ2GEJ 105 X (1M)	B	110.9/12.1
R378	7410001140	S.ARR EXB28V104JX	B	100.7/18.3
R379	7030005090	S.RES ERJ2GEJ 104 X (100K)	T	111.6/23.8
R386	7030005120	S.RES ERJ2GEJ 102 X (1K)	T	105.8/85.1
R387	7030005120	S.RES ERJ2GEJ 102 X (1K)	T	107.8/85.1
R389	7030005090	S.RES ERJ2GEJ 104 X (100K)	T	110.4/10.7
R390	7030005120	S.RES ERJ2GEJ 102 X (1K)	B	79.8/46.1
R391	7030005120	S.RES ERJ2GEJ 102 X (1K)	T	79.3/41.3
C1	4030017420	S.CER ECJ0EC1H470J	T	88.9/54.3
C2	4030017420	S.CER ECJ0EC1H470J	T	89.9/54.3
C3	4030017420	S.CER ECJ0EC1H470J	T	41.5/15.4
C4	4030017420	S.CER ECJ0EC1H470J	B	50/15
C5	4030017460	S.CER ECJ0EB1E102K	T	89.4/34
C6	4550007080	S.TAN TEESVA 1C 106M8R	T	80.8/55.1
C7	4030017420	S.CER ECJ0EC1H470J	T	84/18.4
C8	4030017420	S.CER ECJ0EC1H470J	T	89.9/52
C9	4030016930	S.CER ECJ0EB1A104K	T	88.9/52
C10	4030016930	S.CER ECJ0EB1A104K	T	80.6/50.7
C11	4030016930	S.CER ECJ0EB1A104K	T	10.9/18.8
C12	4030016930	S.CER ECJ0EB1A104K	T	8.5/7.4
C13	4030016930	S.CER ECJ0EB1A104K	T	85.6/10
C14	4030016930	S.CER ECJ0EB1A104K	T	86.6/10
C15	4030017460	S.CER ECJ0EB1E102K	T	41.5/7.7
C16	4550000460	S.TAN TEESVA 1C 105M8R	T	42.7/6.2
C17	4550000460	S.TAN TEESVA 1C 105M8R	B	42.7/6.2
C18	4030017420	S.CER ECJ0EC1H470J	T	41.5/14.5
C19	4030017420	S.CER ECJ0EC1H470J	B	50/15.9
C20	4030016970	S.CER ECJ0EB1C223K	B	100.9/52.3
C21	4030017420	S.CER ECJ0EC1H470J	T	41.5/13.5
C22	4030017420	S.CER ECJ0EC1H470J	T	41.5/12.6
C23	4030016930	S.CER ECJ0EB1A104K	T	51.8/5.6
C24	4030017420	S.CER ECJ0EC1H470J	B	39.8/9.8
C25	4030017420	S.CER ECJ0EC1H470J	T	61.4/6
C26	4030016930	S.CER ECJ0EB1A104K	B	37.2/5.8
C27	4030017760	S.CER ECJ0EB1H222K	B	36.3/7.5
C28	4030016790	S.CER ECJ0EB1C103K	T	79.3/7.6
C29	4030017460	S.CER ECJ0EB1E102K	T	79/13.6
C30	4030016930	S.CER ECJ0EB1A104K	T	78.1/13.6
C31	4030017460	S.CER ECJ0EB1E102K	T	80.6/51.7
C32	4030017500	S.CER ECJ0EC1H560J	B	33.3/15.9
C33	4030016930	S.CER ECJ0EB1A104K	B	34.8/12.8
C34	4030017570	S.CER ECJ0EC1H040B	B	32.1/15.4
C35	4030017590	S.CER ECJ0EC1H070C	B	30.9/15.9
C36	4030016930	S.CER ECJ0EB1A104K	T	22.4/14.9
C37	4030017360	S.CER ECJ0EC1H030B	B	28.3/15.4
C38	4030016930	S.CER ECJ0EB1A104K	T	22/6.2
C39	4030016930	S.CER ECJ0EB1A104K	B	13.6/6.2

[MAIN UNIT] (Other than "MDC compatible")

REF NO.	PARTS NO.	DESCRIPTION	M.	H/V LOCATION
C40	4030016930	S.CER ECJ0EB1A104K	T	23.8/6.2
C41	4030016930	S.CER ECJ0EB1A104K	T	22/12.5
C42	4030016930	S.CER ECJ0EB1A104K	T	23/12.5
C43	4030017430	S.CER ECJ0EC1H101J	T	26.4/9.4
C44	4030017430	S.CER ECJ0EC1H101J	T	25.5/9.4
C45	4030017790	S.CER ECJ0EB1E682K	B	91.7/10
C46	4030016930	S.CER ECJ0EB1A104K	B	93.8/10
C47	4030016970	S.CER ECJ0EB1C223K	T	92.1/15.1
C48	4030017710	S.CER ECJ0EC1H181J	B	49.7/9.1
C49	4550007080	S.TAN TEESVA 1C 106M8R	T	52.1/15.4
C50	4030017460	S.CER ECJ0EB1E102K	T	54.3/12
C51	4030017400	S.CER ECJ0EC1H220J	T	47.8/19
C52	4030017400	S.CER ECJ0EC1H220J	T	44.7/7.8
C53	4030017900	S.CER ECJ0EB1C123K	T	59.1/10.6
C54	4030018080	S.CER ECJ0EB1H182K	T	59.1/11.5
C55	4030016790	S.CER ECJ0EB1C103K	T	64.5/57
C56	4030017620	S.CER ECJ0EC1H100C	T	87.7/35.5
C57	4030016930	S.CER ECJ0EB1A104K	T	80.1/36.7
C58	4030017430	S.CER ECJ0EC1H101J	T	85.2/38.6
C59	4030017460	S.CER ECJ0EB1E102K	T	81.8/24.3
C60	4030017420	S.CER ECJ0EC1H470J	T	82.9/41.5
C63	4030017620	S.CER ECJ0EC1H100C	T	84/39.1
C64	4030017780	S.CER ECJ0EB1E472K	T	81.3/41.3
C65	4030017460	S.CER ECJ0EB1E102K	T	27.6/10.6
C66	4550006050	S.TAN TEESVA 0J 106M8R	T	31.1/6.8
C67	4030017460	S.CER ECJ0EB1E102K	T	27.6/7.1
C68	4030017460	S.CER ECJ0EB1E102K	T	30.5/9
C69	4030017460	S.CER ECJ0EB1E102K	T	32.6/15.4
C70	4030017420	S.CER ECJ0EC1H470J	B	28.3/13.4
C71	4030016940	S.CER ECJ0EB1A393K	B	91.7/8.3
C72	4030018860	S.CER ECJ0EB0J105K	B	50.7/11
C73	4030017750	S.CER ECJ0EB1E122K	B	51.3/16.6
C74	4030016930	S.CER ECJ0EB1A104K	B	52.3/16.6
C75	4030016930	S.CER ECJ0EB1A104K	B	56.2/12.6
C77	4030017460	S.CER ECJ0EB1E102K	B	54.2/16.6
C78	4030017460	S.CER ECJ0EB1E102K	B	53.7/9
C79	4550007080	S.TAN TEESVA 1C 106M8R	T	66.5/55.3
C80	4030017780	S.CER ECJ0EB1E472K	B	79.2/35
C81	4550000460	S.TAN TEESVA 1C 105M8R	B	82.2/36.4
C82	4030017460	S.CER ECJ0EB1E102K	B	84.1/26.9
C83	4550000460	S.TAN TEESVA 1C 105M8R	B	84/32.5
C84	4030017460	S.CER ECJ0EB1E102K	T	78.2/48.8
C85	4030017380	S.CER ECJ0EC1H050B	B	77.1/47.2
C86	4030017350	S.CER ECJ0EC1H020B	B	74.8/48.3
C87	4030017580	S.CER ECJ0EC1H060C	B	73.7/48.3
C88	4030017380	S.CER ECJ0EC1H050B	B	72.4/48.6
C89	4030017580	S.CER ECJ0EC1H060C	B	71.1/49.1
C90	4030017350	S.CER ECJ0EC1H020B	B	70/49.1
C91	4030016790	S.CER ECJ0EB1C103K	T	27.3/17.3
C92	4030017460	S.CER ECJ0EB1E102K	T	25.2/22.4
C93	4030017680	S.CER ECJ0EC1H820J	T	32.6/12.6
C94	4030017460	S.CER ECJ0EB1E102K	B	27.8/12.5
C95	4030016790	S.CER ECJ0EB1C103K	T	28.9/20.1
C96	4030016930	S.CER ECJ0EB1A104K	B	32.8/8.1
C97	4030016930	S.CER ECJ0EB1A104K	B	29.6/9
C98	4030016930	S.CER ECJ0EB1A104K	B	89.3/7.3
C99	4030016930	S.CER ECJ0EB1A104K	B	90.7/14.8
C100	4030016930	S.CER ECJ0EB1A104K	T	87.3/14.3
C101	4030017710	S.CER ECJ0EC1H181J	T	83.9/7.2
C102	4030016930	S.CER ECJ0EB1A104K	T	108/32.8
C103	4030016930	S.CER ECJ0EB1A104K	B	55.3/19.3
C104	4550003250	S.TAN TEESVA 1V 474M8R	B	67.2/24.2
C105	4030017420	S.CER ECJ0EC1H470J	T	49.2/29.4
C106	4030017460	S.CER ECJ0EB1E102K	B	78/29.1
C107	4030016930	S.CER ECJ0EB1A104K	B	54.2/28.8
C109	4550006480	S.TAN TEESVA 1C 475M8R	B	56.1/27.7
C110	4030017420	S.CER ECJ0EC1H470J	T	60.1/27
C111	4030016930	S.CER ECJ0EB1A104K	B	66.3/30.3
C112	4030017460	S.CER ECJ0EB1E102K	B	67.4/30.3
C113	4030017420	S.CER ECJ0EC1H470J	T	72.1/26.6
C114	4030016790	S.CER ECJ0EB1C103K	T	24.3/22.4
C115	4030016790	S.CER ECJ0EB1C103K	T	23/21.2
C116	4030016790	S.CER ECJ0EB1C103K	T	28.5/22.6
C118	4030017640	S.CER ECJ0EC1H150J	T	20.5/28.7
C120	4030016790	S.CER ECJ0EB1C103K	T	32.6/22.5
C121	4030017570	S.CER ECJ0EC1H040B	T	34.8/23.5
C122	4030017390	S.CER ECJ0EC1H180J	T	39.8/28.9
C124	4030016930	S.CER ECJ0EB1A104K	B	90.3/18.9
C125	4030017460	S.CER ECJ0EB1E102K	B	128.5/52.6
C126	4030016930	S.CER ECJ0EB1A104K	T	79.6/20.6
C127	4030016930	S.CER ECJ0EB1A104K	B	82.8/20.1
C128	4030016930	S.CER ECJ0EB1A104K	T	78.4/19.3
C129	4030016930	S.CER ECJ0EB1A104K	B	63.7/16.4
C130	4030016930	S.CER ECJ0EB1A104K	B	135.6/25.4
C131	4030017660	S.CER ECJ0EC1H330J	T	135.9/25.7
C132	4030017660	S.CER ECJ0EC1H330J	T	135.9/18
C133	4030018010	S.CER ECJ0EC1H360J	T	48.1/35.5
C134	4030017640	S.CER ECJ0EC1H150J	T	49.4/34.8
C135	4030017660	S.CER ECJ0EC1H330J	T	64.1/32.5
C136	4030017340	S.CER ECJ0EC1H010B	T	71.1/30.8
C137	4030017570	S.CER ECJ0EC1H040B	T	71.1/29.9
C138	4030017730	S.CER ECJ0EB1E471K	T	71.9/33
C139	4030017390	S.CER ECJ0EC1H180J	T	62.1/32
C140	4030017360	S.CER ECJ0EC1H030B	T	72.5/30.7
C141	4030017360	S.CER ECJ0EC1H030B	T	72.1/29
C142	4030018860	S.CER ECJ0EB0J105K	T	89.5/12.7
C143	4030017400	S.CER ECJ0EC1H220J	T	71.3/36.6
C145	4030016790	S.CER ECJ0EB1C103K	T	31.4/35.2
C147	4030016790	S.CER ECJ0EB1C103K	T	34.5/35.2
C148	4030016790	S.CER ECJ0EB1C103K	T	30.9/26.4
C149	4030016930	S.CER ECJ0EB1A104K	B	78.2/17.4
C150	4030018560	S.CER C2012 JB 1A 475K-T	B	86.9/19.8
C151	4030016930	S.CER ECJ0EB1A104K	T	112.1/46
C152	4030016930	S.CER ECJ0EB1A104K	T	109.6/34.3
C153	4030017460	S.CER ECJ0EB1E102K	T	111.4/34.3

M.=Mounted side (T: Mounted on the Top side, B: Mounted on the Bottom side)
S.=Surface mount

[MAIN UNIT] (Other than "MDC compatible")

REF NO.	PARTS NO.	DESCRIPTION	M.	H/V LOCATION
C154	4030018860	S.CER ECJ0EB0J105K	T	82.7/19.8
C155	4030017420	S.CER ECJ0EC1H470J	T	110.3/38.7
C156	4030017910	S.CER ECJ0EB1H152K	T	104.9/42.3
C157	4030017420	S.CER ECJ0EC1H470J	T	110.8/48.6
C158	4030017430	S.CER ECJ0EC1H101J	T	110.3/37.8
C159	4030017460	S.CER ECJ0EB1E102K	T	120.3/5.5
C160	4030017460	S.CER ECJ0EB1E102K	B	130.6/25.4
C161	4030018010	S.CER ECJ0EC1H360J	T	50.8/43.8
C162	4030017590	S.CER ECJ0EC1H070C	T	52.1/43.4
C163	4030017660	S.CER ECJ0EC1H330J	T	58.7/39.4
C164	4030017660	S.CER ECJ0EC1H330J	T	48.6/45.8
C165	4030017660	S.CER ECJ0EC1H330J	T	49.9/45.4
C166	4030017580	S.CER ECJ0EC1H060C	T	60.1/38.9
C167	4030017420	S.CER ECJ0EC1H470J	T	70/38.9
C168	4030017660	S.CER ECJ0EC1H330J	T	59.1/40.8
C169	4030017660	S.CER ECJ0EC1H330J	T	60.7/40.4
C170	4030017550	S.CER ECJ0EC1H1R5B	T	70.4/36.6
C171	4030017570	S.CER ECJ0EC1H040B	T	70/37.9
C172	4030017400	S.CER ECJ0EC1H220J	T	70/42.9
C173	4030017400	S.CER ECJ0EC1H220J	T	70/43.9
C174	4030017640	S.CER ECJ0EC1H150J	T	38.3/38.8
C175	4030016790	S.CER ECJ0EB1C103K	B	41.4/39.4
C176	4030016930	S.CER ECJ0EB1A104K	B	41/33.2
C177	4030017730	S.CER ECJ0EB1E471K	B	41/32.2
C178	4030016790	S.CER ECJ0EB1C103K	B	34.5/33
C180	4030017740	S.CER ECJ0EB1E821K	T	109.2/48.6
C181	4030016930	S.CER ECJ0EB1A104K	T	112.1/43.2
C182	4030016780	S.CER ECJ0EB1C153K	T	112.1/39.6
C183	4030017420	S.CER ECJ0EC1H470J	T	104.9/45
C184	4030017760	S.CER ECJ0EB1H222K	T	104.9/45.9
C185	4030017690	S.CER ECJ0EC1H121J	T	107.8/48.6
C186	4030016790	S.CER ECJ0EB1C103K	T	51.7/45.4
C187	4030017460	S.CER ECJ0EB1E102K	T	52.6/45.4
C188	4030016790	S.CER ECJ0EB1C103K	T	62.7/40.4
C189	4030017460	S.CER ECJ0EB1E102K	T	63.7/40.4
C190	4030017540	S.CER ECJ0EC1HR75B	T	55/48.3
C191	4030016790	S.CER ECJ0EB1C103K	T	70/40.9
C192	4030017540	S.CER ECJ0EC1HR75B	T	57.7/43
C193	4030017460	S.CER ECJ0EB1E102K	T	70/39.9
C194	4030017530	S.CER ECJ0EC1H0R5B	T	60/44.4
C195	4030016930	S.CER ECJ0EB1A104K	B	39/30
C196	4030017730	S.CER ECJ0EB1E471K	B	38.1/33.2
C197	4030016930	S.CER ECJ0EB1A104K	B	38.1/32.2
C198	4030017730	S.CER ECJ0EB1E471K	B	31.3/38.3
C199	4030016930	S.CER ECJ0EB1A104K	B	31.3/39.2
C200	4030016930	S.CER ECJ0EB1A104K	B	31.3/34
C201	4030017730	S.CER ECJ0EB1E471K	B	31.3/33.1
C202	4030017460	S.CER ECJ0EB1E102K	T	112.1/38.7
C203	4030017460	S.CER ECJ0EB1E102K	B	100.9/47
C205	4030018900	S.CER ECJ0EB0J474K	T	78.4/18.4
C206	4030016930	S.CER ECJ0EB1A104K	T	78.5/16.7
C207	4030017730	S.CER ECJ0EB1E471K	T	61/45.7
C208	4030017460	S.CER ECJ0EB1E102K	T	60/45.7
C209	4030017460	S.CER ECJ0EB1E102K	B	65/52.7
C210	4030017590	S.CER ECJ0EC1H070C	B	57.6/50.3
C211	4030017620	S.CER ECJ0EC1H100C	B	60/51.4
C212	4030017460	S.CER ECJ0EB1E102K	B	63.8/50.8
C214	4030017460	S.CER ECJ0EB1E102K	B	66.8/41.3
C215	4030017390	S.CER ECJ0EC1H180J	B	38.5/47.6
C216	4030017660	S.CER ECJ0EC1H330J	B	43.1/47.6
C217	4030017730	S.CER ECJ0EB1E471K	B	25/32.7
C218	4030016930	S.CER ECJ0EB1A104K	B	25/31.7
C219	4030017650	S.CER ECJ0EC1H270J	B	23/36.3
C220	4030017600	S.CER ECJ0EC1H080C	B	23/38
C221	4030016930	S.CER ECJ0EB1A104K	B	5.6/23.2
C222	4030017030	S.CER ECJ0EB1A273K	B	128.6/45.3
C223	4030016930	S.CER ECJ0EB1A104K	B	126.3/48.2
C224	4030017640	S.CER ECJ0EC1H150J	T	124.2/40.1
C225	4030016790	S.CER ECJ0EB1C103K	T	124.2/37.4
C226	4030017580	S.CER ECJ0EC1H060C	T	124.2/41.1
C227	4030017460	S.CER ECJ0EB1E102K	B	57.6/53.5
C228	4030017460	S.CER ECJ0EB1E102K	B	56.4/53.1
C229	4030017620	S.CER ECJ0EC1H100C	B	52.1/53.1
C230	4030017460	S.CER ECJ0EB1E102K	B	63.5/62.3
C231	4030017360	S.CER ECJ0EC1H030B	B	66.3/52.2
C232	4030017460	S.CER ECJ0EB1E102K	B	68.6/49.5
C235	4030017460	S.CER ECJ0EB1E102K	B	44.4/50.7
C236	4030017390	S.CER ECJ0EC1H180J	B	47.8/48.1
C237	4030017620	S.CER ECJ0EC1H100C	B	47.4/49.4
C240	4030017460	S.CER ECJ0EB1E102K	B	18.9/34.4
C241	4030017360	S.CER ECJ0EC1H030B	B	17/37.7
C242	4030017460	S.CER ECJ0EB1E102K	B	15/34.4
C243	4030017460	S.CER ECJ0EB1E102K	B	18.9/33.5
C244	4030017460	S.CER ECJ0EB1E102K	B	15.7/31.7
C245	4550006780	S.TAN TEESVB2 0J 476M8R	B	5.6/18.7
C246	4030016930	S.CER ECJ0EB1A104K	B	105.1/52.2
C247	4030016930	S.CER ECJ0EB1A104K	B	107/52.9
C248	4030016930	S.CER ECJ0EB1A104K	B	108.1/52
C249	4030018900	S.CER ECJ0EB0J474K	B	121.8/47.4
C250	4030017630	S.CER ECJ0EC1H120J	T	120.4/40.1
C251	4030017400	S.CER ECJ0EC1H220J	B	61.9/64.2
C252	4030017420	S.CER ECJ0EC1H470J	B	62.6/71.1
C253	4030017730	S.CER ECJ0EB1E471K	B	61.6/71.1
C254	4030017420	S.CER ECJ0EC1H470J	B	63.9/69.5
C256	4030017460	S.CER ECJ0EB1E102K	B	59.7/65.5
C257	4030017460	S.CER ECJ0EB1E102K	B	63.4/67.4
C258	4030017460	S.CER ECJ0EB1E102K	T	13.9/32.5
C259	4030017460	S.CER ECJ0EB1E102K	T	10/35
C260	4030017590	S.CER ECJ0EC1H070C	B	14.2/36.3
C261	4030017460	S.CER ECJ0EB1E102K	B	9.5/33.9
C262	4030017460	S.CER ECJ0EB1E102K	B	13.7/37.7
C263	4030017490	S.CER C1608 JB 1A 105K-T	T	14.1/33.7
C264	4030017350	S.CER ECJ0EC1H020B	B	8.4/38.6
C265	4030017420	S.CER ECJ0EC1H470J	B	8.6/36.3
C266	4030017460	S.CER ECJ0EB1E102K	B	9.5/36.3

[MAIN UNIT] (Other than "MDC compatible")

REF NO.	PARTS NO.	DESCRIPTION	M.	H/V LOCATION
C267	4030017460	S.CER ECJ0EB1E102K	B	63.9/70.5
C268	4030017640	S.CER ECJ0EC1H150J	B	68.2/69.1
C269	4030017390	S.CER ECJ0EC1H180J [A]	B	69.7/69.1
	4030017650	S.CER ECJ0EC1H270J [E]		
	4030017650	S.CER ECJ0EC1H270J [C]		
C270	4030017390	S.CER ECJ0EC1H180J	B	71.2/69
C271	4030017400	S.CER ECJ0EC1H220J [A]	T	74.3/71.7
	4030017390	S.CER ECJ0EC1H180J [E]		
	4030017390	S.CER ECJ0EC1H180J [C]		
C272	4030016930	S.CER ECJ0EB1A104K	T	7.9/39.5
C273	4030016930	S.CER ECJ0EB1A104K	T	9.5/39.5
C274	4030017460	S.CER ECJ0EB1E102K	T	7.4/41.2
C275	4030016930	S.CER ECJ0EB1A104K	T	15/41
C276	4030017620	S.CER ECJ0EC1H100C	B	10.5/41
C277	4030017460	S.CER ECJ0EB1E102K	T	14/41
C278	4030017350	S.CER ECJ0EC1H020B	B	8.9/43.6
C279	4030017460	S.CER ECJ0EB1E102K	B	6.9/44.2
C280	4030017550	S.CER ECJ0EC1H1R5B	B	9.4/46.1
C281	4030017420	S.CER ECJ0EC1H470J	T	97.9/34.2
C282	4030017420	S.CER ECJ0EC1H470J	T	102.1/40
C283	4030017420	S.CER ECJ0EC1H470J	B	97.4/44.6
C284	4030017420	S.CER ECJ0EC1H470J	T	94.8/35.5
C285	4030017420	S.CER ECJ0EC1H470J	B	94.2/44.4
C286	4030017420	S.CER ECJ0EC1H470J	T	92.1/43.3
C287	4030017420	S.CER ECJ0EC1H470J	T	92.1/41.6
C288	4030017460	S.CER ECJ0EB1E102K	B	4.8/46.5
C290	4030017400	S.CER ECJ0EC1H220J	T	74.3/73.6
C291	4030017730	S.CER ECJ0EB1E471K	T	69.3/76.1
C292	4550000560	S.TAN TEESVA 1V 334M8R	T	67.6/74.4
C294	4030017420	S.CER ECJ0EC1H470J	T	70.4/76.1
C295	4030017420	S.CER ECJ0EC1H470J	T	56.7/67.3
C296	4510008530	S.ELE EEE1HA2R2SR	T	59.6/80
C297	4030017460	S.CER ECJ0EB1E102K	T	56.7/68.3
C299	4030017460	S.CER ECJ0EB1E102K	B	6.9/47.9
C300	4030017340	S.CER ECJ0EC1H010B	B	8.9/48.5
C301	4030017580	S.CER ECJ0EC1H060C	B	13.2/49.5
C302	4030017460	S.CER ECJ0EB1E102K	B	4.4/44.4
C303	4030016930	S.CER ECJ0EB1A104K	B	129.6/32
C304	4030017420	S.CER ECJ0EC1H470J	B	90/43.4
C305	4030011140	S.CER GRM31M2C2H120JV01L (GRM42-6 CH)	T	27.6/78.7
C306	4030011120	S.CER GRM31M2C2H100JV01L (GRM42-6 CH)	T	27.6/76.1
C307	4030011120	S.CER GRM31M2C2H100JV01L (GRM42-6 CH)	T	27.7/71.8
C308	4030011070	S.CER GRM31M2C2H5R0CY21L (GRM42-6 CH) [A]	T	27.7/69.2
	4030011140	S.CER GRM31M2C2H120JV01L (GRM42-6 CH) [E]		
	4030011140	S.CER GRM31M2C2H120JV01L (GRM42-6 CH) [C]		
C309	4030017460	S.CER ECJ0EB1E102K	T	71.5/76.1
C310	4030017420	S.CER ECJ0EC1H470J	T	43/76.1
C311	4030017460	S.CER ECJ0EB1E102K	T	44.1/76.1
C312	4030017730	S.CER ECJ0EB1E471K	T	45.3/76.1
C313	4510008680	S.ELE EEE1EA220SP	T	51.7/77.7
C314	4030017730	S.CER ECJ0EB1E471K	B	40.2/68.3
C315	4030017460	S.CER ECJ0EB1E102K	T	55.7/73.6
C316	4030016790	S.CER ECJ0EB1C103K	T	54.1/72.6
C317	4030011600	S.CER C1608 JB 1E 104K-T	T	54.1/67
C318	4030017460	S.CER ECJ0EB1E102K [A] only	T	35.1/63.3
C319	4030017460	S.CER ECJ0EB1E102K [A] only	T	47.3/67.4
C320	4030017580	S.CER ECJ0EC1H060C	B	15/52.7
C321	4030017460	S.CER ECJ0EB1E102K	B	14.9/49.5
C322	4030017600	S.CER ECJ0EC1H080C	B	19.3/52
C323	4030017570	S.CER ECJ0EC1H040B	B	20/49.6
C324	4030017420	S.CER ECJ0EC1H470J	B	90/41.8
C325	4030017460	S.CER ECJ0EB1E102K	T	72.5/64.9
C326	4030017420	S.CER ECJ0EC1H470J	B	46.2/64.3
C327	4030017460	S.CER ECJ0EB1E102K	B	84.2/79
C328	4030017460	S.CER ECJ0EB1E102K	B	83.2/79
C329	4030017460	S.CER ECJ0EB1E102K	B	82.1/79
C330	4030017460	S.CER ECJ0EB1E102K	B	81/79
C331	4030017460	S.CER ECJ0EB1E102K	B	80/79
C332	4030016930	S.CER ECJ0EB1A104K	T	51.9/71.9
C334	4030017460	S.CER ECJ0EB1E102K	T	49.5/68.6
C335	4030017460	S.CER ECJ0EB1E102K	T	53.8/63.2
C336	4030017580	S.CER ECJ0EC1H060C	B	20.8/52
C337	4030017390	S.CER ECJ0EC1H180J	B	25.1/51.2
C338	4510008600	S.ELE EEE1CA4R7NR	T	79.1/69.1
C339	4030017460	S.CER ECJ0EB1E102K	T	79.1/62.1
C340	4030017460	S.CER ECJ0EB1E102K	T	37.5/20.8
C341	4030016790	S.CER ECJ0EB1C103K	T	41.9/19.4
C342	4030017200	S.CER GRM31BR32J102KY01L (GHM1030 R)	T	25.3/62.5
C343	4030011270	S.CER GRM31M2C2H200JV01L (GRM42-6 CH)	T	22.1/63.9
C345	4030011170	S.CER GRM31M2C2H180JV01L (GRM42-6 CH)	T	17.3/57.4
C346	4030011170	S.CER GRM31M2C2H180JV01L (GRM42-6 CH)	T	30.2/62.8
C347	4030017520	S.CER ECJ0EC1H0R3B	B	25.4/63
C348	4030017460	S.CER ECJ0EB1E102K	B	31.5/63.4
C349	4030016930	S.CER ECJ0EB1A104K	T	100.5/63.5
C350	4550005980	S.TAN TEESVA 1A 475M8R	T	101.6/62
C351	4030018860	S.CER ECJ0EB0J105K	T	110.6/67.4
C352	4030017460	S.CER ECJ0EB1E102K	B	124.6/59.6
C353	4550005980	S.TAN TEESVA 1A 475M8R	B	124.5/61.3
C354	4550006250	S.TAN TEESVA 1A 106M8R	B	112.9/61.7
C355	4030017420	S.CER ECJ0EC1H470J	B	112.6/60.1
C356	4030011270	S.CER GRM31M2C2H200JV01L (GRM42-6 CH)	T	14.7/62.9
C357	4030011270	S.CER GRM31M2C2H200JV01L (GRM42-6 CH)	T	10.4/62.9
C358	4030007030	S.CER C1608 CH 1H 150J-T	B	10.6/56.4

M.=Mounted side (T: Mounted on the Top side, B: Mounted on the Bottom side)
S.=Surface mount

[MAIN UNIT] (Other than "MDC compatible")

REF NO.	PARTS NO.	DESCRIPTION	M.	H/V LOCATION
C359	4030011340	S.CER C1608 CH 1H 471J-T	B	9.4/56.4
C360	4030017460	S.CER ECJ0EB1E102K	B	4/53
C361	4030017460	S.CER ECJ0EB1E102K	T	103.9/53.5
C362	4030017460	S.CER ECJ0EB1E102K	T	108.2/24.5
C363	4510008540	S.ELE EEE1CA100SR	T	139.1/31.9
C365	4550007650	S.TAN F931V105MAABMA	B	106.7/65
C366	4550007650	S.TAN F931V105MAABMA	B	104.2/65
C367	4550007650	S.TAN F931V105MAABMA	B	101.6/65
C368	4550007650	S.TAN F931V105MAABMA	B	99.5/64.6
C369	4030011270	S.CER GRM31M2C2H200JV01L (GRM42-6 CH)	T	15.8/78.9
C370	4030011270	S.CER GRM31M2C2H200JV01L (GRM42-6 CH)	T	15.8/83.1
C371	4030017460	S.CER ECJ0EB1E102K	B	4.1/81.6
C372	4030006850	S.CER C1608 JB 1H 471K-T	B	8.3/77.1
C373	4030016930	S.CER ECJ0EB1A104K	B	130.9/51.7
C374	4030016930	S.CER ECJ0EB1A104K	B	133/51.3
C375	4030016930	S.CER ECJ0EB1A104K	B	132.4/54.6
C377	4030017460	S.CER ECJ0EB1E102K	T	105.9/51.9
C378	4030017460	S.CER ECJ0EB1E102K	T	108.2/78
C379	4030016930	S.CER ECJ0EB1A104K	B	108.4/80.3
C380	4030017460	S.CER ECJ0EB1E102K	B	120.5/83.2
C381	4030016790	S.CER ECJ0EB1C103K	B	135.9/70.5
C383	4030017460	S.CER ECJ0EB1E102K	B	135.9/71.5
C384	4510008870	S.ELE EEE1AA471UP	T	129.9/64.9
C386	4030016930	S.CER ECJ0EB1A104K	B	138.8/53.7
C387	4030017720	S.CER ECJ0EB1H331K	B	135.4/51.3
C388	4030018860	S.CER ECJ0EB0J105K	B	138.6/52.2
C389	4030016930	S.CER ECJ0EB1A104K	B	139.1/49.4
C390	4030016930	S.CER ECJ0EB1A104K	B	137.8/55.4
C391	4030016930	S.CER ECJ0EB1A104K	T	101.8/82.3
C392	4030017460	S.CER ECJ0EB1E102K	B	127.8/76.8
C393	4030017460	S.CER ECJ0EB1E102K	B	99/79
C394	4030017420	S.CER ECJ0EC1H470J	B	115.4/68
C395	4030017460	S.CER ECJ0EB1E102K	B	126.5/77.1
C397	4030017460	S.CER ECJ0EB1E102K	B	99.8/86.3
C398	4030017420	S.CER ECJ0EC1H470J	B	100.8/86.3
C399	4030018860	S.CER ECJ0EB0J105K	B	136.3/37.1
C400	4030016930	S.CER ECJ0EB1A104K	B	139.7/35.3
C411	4510008780	S.ELE EEE1EA471P	T	117.2/63.6
C412	4510008780	S.ELE EEE1EA471P	T	132.7/54.3
C413	4030018900	S.CER ECJ0EB0J474K	B	135.1/46.8
C414	4510008540	S.ELE EEE1CA100SR	T	118.7/50.5
C415	4030016930	S.CER ECJ0EB1A104K	B	103/23.8
C416	4030016930	S.CER ECJ0EB1A104K	B	120.3/51.6
C417	4030016790	S.CER ECJ0EB1C103K	B	115.6/52.8
C418	4030017460	S.CER ECJ0EB1E102K	T	109.6/54.5
C419	4030016790	S.CER ECJ0EB1C103K	T	42.9/39.2
C420	4030017500	S.CER ECJ0EC1H560J	T	41/37.4
C421	4030016930	S.CER ECJ0EB1A104K	B	36/24.7
C422	4030016790	S.CER ECJ0EB1C103K	T	43.1/31.9
C423	4030018010	S.CER ECJ0EC1H360J	T	39.9/35.3
C424	4030016930	S.CER ECJ0EB1A104K	T	38.9/32.2
C425	4030017460	S.CER ECJ0EB1E102K	B	134.8/66.1
C426	4030018860	S.CER ECJ0EB0J105K	B	110/12.1
C427	4030017460	S.CER ECJ0EB1E102K	B	109.1/10.4
C430	4030017570	S.CER ECJ0EC1H040B	T	78.2/44.8
J1	6510026770	S.CON AXK540147YG	T	124.5/9.7
J2	6510026770	S.CON AXK540147YG	T	101.5/9.7
J3	6510021301	S.CON 52365-1071	T	90.3/62.6
J5	6510023092	S.CON 20FLT-SM2-TB(LF)(SN)(M)	T	108.3/81.8
J7	6450000140	CON HSJ0807-01-010		
J10	6510023092	S.CON 20FLT-SM2-TB(LF)(SN)(M)	T	71/7
W1	7120000470	JUM ERDS2T0		
W2	8900016250	CAB OPC-1701 <CMI>T/H!		
EP1	6910015600	S.BEA ACZ1005Y-241 (240)	B	39.8/8.1
EP2	6910015370	S.BEA ACZ1005Y-102-T	B	50.1/12.4
EP3	6910015370	S.BEA ACZ1005Y-102-T	T	82.6/37.1
EP4	6910010280	BEA HF70BB9.5X10.4X4.9		
EP5	6910010280	BEA HF70BB9.5X10.4X4.9		
EP6	6910011560	BEA HF70BB4.5X5X1.6		

[MAIN-A UNIT] (MDC compatible)

REF NO.	PARTS NO.	DESCRIPTION	M.	H/V LOCATION
IC1	1110005340	S.IC NJM12902V-TE1-#ZZZB	T	82.3/12.9
IC2	1110006221	S.IC AK2346P-E2/P	B	44.7/11.7
IC3	1140013200	S.IC CD4053BPWR	B	58.7/9.3
IC4	1130010100	S.IC LMX2352TMX/NOPB	T	82.9/46
IC5	1110003491	S.IC TA31136FNG(D,EL)	T	28/13.9
IC6	1190001350	S.IC M62364FP 600D	B	84.9/12.9
IC7	1110005340	S.IC NJM12902V-TE1-#ZZZB	T	108.5/43.7
IC8	1140013200	S.IC CD4053BPWR	B	58.7/16.1
IC9	1130012960	S.IC BU8872FS-E2	B	133.1/21.3
IC10	1190002051	S.IC SPM5001-TL-E	B	33.8/36.9
IC12	1190001340	S.IC M62334FP 600C	B	9.1/25.7
IC13	1110005771	S.IC S-80942CNMC-G9CT2G	B	126/44.8
IC14	1140014550	S.IC HD64F2506RFC26DV(EMPTY)	B	111.8/35.7
IC15	1150002073	IC RA60H1317M-125 [B]		
	1150002042	IC RA30H1317M-121 [F]		
	1150002042	IC RA30H1317M-121 [D]		
	1150002073	IC RA60H1317M-125 [G]		
	1150002042	IC RA30H1317M-121 [J]		
	1150002073	IC RA60H1317M-125 [H]		
	1150002073	IC RA60H1317M-125 [I]		
IC16	1140014160	S.IC 24LC1025T-I/SM	B	133.3/29
IC17	1110002751	S.IC TA75S01F(TE85R,F)	T	54.1/70.4
IC18	1180000970	S.IC AN78L05M-(E1)	B	113/65.3
IC19	1120002510	S.IC DS14C232TM S	T	104.7/70.5
IC20	1180001251	S.IC TA7808F(TE16L,Q)	B	121.5/65.8
IC21	1110003091	IC LA4425A-E		
IC22	1110002751	S.IC TA75S01F(TE85R,F)	B	135.5/54.4
IC23	1130006221	S.IC TC4W53FU(TE12L,F)	B	106.9/9.6
IC25	1110006230	S.IC NJM2711F-TE1-#ZZZB	B	26.1/6.6
Q1	1590003231	S.TRA UNR9113G0L	B	15.2/6
Q3	1530002851	S.TRA 2SC4116-BL(TE85R,F)	B	36.4/15.5
Q4	1590001650	S.TRA XP4601(TX)	B	92.8/12.4
Q5	1590003291	S.TRA UNR9213G0L	B	76.7/50
Q6	1530002851	S.TRA 2SC4116-BL(TE85R,F)	T	63.2/55.1
Q7	1560000541	S.FET 2SK880-Y(T5RICOM,F)	B	81.2/27.1
Q8	1530002851	S.TRA 2SC4116-BL(TE85R,F)	B	79.2/31.8
Q9	1530002851	S.TRA 2SC4116-BL(TE85R,F)	B	81.7/31.8
Q10	1560001360	S.FET 2SK3019 TL	B	57/31.6
Q12	1530002601	S.TRA 2SC4215-O(TE85R,F)	T	26.9/20
Q16	1590003291	S.TRA UNR9213G0L	T	113.2/47.6
Q17	1530002920	S.TRA 2SC4226-T1 R25	T	50.9/47.6
Q18	1530002920	S.TRA 2SC4226-T1 R25	T	61.6/42.6
Q19	1530002920	S.TRA 2SC4226-T1 R25	T	72.1/43
Q20	1590003231	S.TRA UNR9113G0L	B	33.9/25.2
Q22	1530003311	S.TRA 2SC5107-O(TE85R,F)	T	58.1/46.3
Q23	1590001400	S.TRA XP1214(TX)	B	55.7/40.9
Q24	1590003281	S.TRA UNR9211G0L	B	55.8/38.2
Q25	1530003311	S.TRA 2SC5107-O(TE85R,F)	B	65.9/49.5
Q26	1590001400	S.TRA XP1214(TX)	B	67.2/43.1
Q27	1590003231	S.TRA UNR9113G0L	T	124.7/52
Q28	1590003291	S.TRA UNR9213G0L	B	123.4/46.3
Q29	1530003311	S.TRA 2SC5107-O(TE85R,F)	B	53.5/51.2
Q30	1530000372	S.TRA 2SC3356-T1B R (R24)	B	65.5/66
Q31	1580000731	S.FET 3SK293(TE85L,F)	B	10.2/38.6
Q32	1560000841	S.FET 2SK1829(TE85R,F)	T	11/42.5
Q33	1530002851	S.TRA 2SC4116-BL(TE85R,F) [B]	T	47.5/69.4
	1530002851	S.TRA 2SC4116-BL(TE85R,F) [G]		
	1530002851	S.TRA 2SC4116-BL(TE85R,F) [H]		
	1530002851	S.TRA 2SC4116-BL(TE85R,F) [I]		
Q34	1590003291	S.TRA UNR9213G0L	T	83/67.4
Q35	1520000460	S.TRA 2SB1132 T100 R	T	100.1/57.9
Q36	1590001190	S.TRA XP6501-(TX).AB	T	104.3/55.8
Q37	1540000550	S.TRA 2SD1664 T100Q	T	75.5/63.6
Q38	1510000920	S.TRA 2SA1577 T106 Q	T	39.3/21.3
Q39	1590003291	S.TRA UNR9213G0L	T	42.6/21.3
Q40	1590003291	S.TRA UNR9213G0L	T	104.1/51.9
Q41	1590001451	S.FET 2SJ144-GR (TE85R,F)	B	110.3/83.3
Q42	1590003291	S.TRA UNR9213G0L	B	132.1/45
Q43	1590000990	S.TRA DTC363EK T146	B	135.7/49
Q44	1590003291	S.TRA UNR9213G0L	T	108.5/21.6
Q45	1590003291	S.TRA UNR9213G0L	B	133.3/58.9
Q46	1590003291	S.TRA UNR9213G0L	T	117.9/84.4
Q47	1550000100	S.FET 2SJ377 (TE16L1,NQ)	B	131.3/71.5
Q48	1590003291	S.TRA UNR9213G0L	B	127.4/78
Q49	1530002851	S.TRA 2SC4116-BL(TE85R,F)	B	139.3/37.2
Q50	1530002601	S.TRA 2SC4215-O(TE85R,F)	T	40.6/39.2
Q51	1590003321	S.FET TPC6103(TE85L,F)	B	133.6/63.4
Q52	1590003291	S.TRA UNR9213G0L	B	128.2/61.1
Q53	1590000430	S.TRA DTC144EUA T106	B	52.3/67.4
Q54	1590000430	S.TRA DTC144EUA T106	T	25.5/6.3
Q55	1560001360	S.FET 2SK3019 TL	T	75.5/20.9
Q57	1590003291	S.TRA UNR9213G0L	T	112/14.4
Q58	1530002851	S.TRA 2SC4116-BL(TE85R,F)	B	24.9/9.5
Q59	1590003291	S.TRA UNR9213G0L	B	96.6/8
Q60	1590003291	S.TRA UNR9213G0L	B	97.8/11.6
D1	1750001070	S.DIO DAN235ETL	T	10.4/15.7
D2	1750001070	S.DIO DAN235ETL	T	22.6/8.9
D3	1790001251	S.DIO MA2S1110GL	T	61.3/55
D4	1790001261	S.DIO MA2S077G0L	B	72.9/49.8
D5	1790001261	S.DIO MA2S077G0L	B	71.1/51.3
D6	1750001070	S.DIO DAN235ETL	T	30.6/20.8
D7	1160000140	S.DIO DAP222 TL	T	58.9/14
D8	1720000791	S.VAR HVC321B1TRF-E	T	49.5/32.4
D9	1720000791	S.VAR HVC321B1TRF-E	T	52.7/32.4
D10	1720000791	S.VAR HVC321B1TRF-E	T	60.5/30
D11	1720000641	S.VAR 1SV284(TPH3,F)	T	52.7/33.6
D12	1720000641	S.VAR 1SV284(TPH3,F)	T	52.7/34.8
D13	1720000791	S.VAR HVC321B1TRF-E	T	63.8/28.6
D14	1720000791	S.VAR HVC321B1TRF-E	T	73.6/30.4
D15	1720000641	S.VAR 1SV284(TPH3,F)	T	63.8/31.3
D17	1720000791	S.VAR HVC321B1TRF-E	T	72.1/27.9

M.=Mounted side (T: Mounted on the Top side, B: Mounted on the Bottom side)
S.=Surface mount

[MAIN-A UNIT] (MDC compatible)

REF NO.	PARTS NO.	DESCRIPTION	M.	H/V LOCATION
D18	1750000721	S.VAR HVC375BTRF-E	T	69.8/33.3
D19	1160000140	S.DIO DAP222 TL	B	120.5/17.8
D20	1720000471	S.VAR 1SV239(TPH3,F)	T	69.4/34.9
D21	1750001070	S.DIO DAN235ETL	T	36.3/38.3
D22	1750000520	S.DIO DAN222TL	T	124.7/54.5
D23	1790001261	S.DIO MA2S077G0L	T	125.6/39.2
D24	1790001261	S.DIO MA2S077G0L	B	50.7/53.2
D25	1790001261	S.DIO MA2S077G0L	B	49.3/50.8
D26	1750000711	S.VAR HVC350BTRF-E	B	17.7/36
D27	1750000711	S.VAR HVC350BTRF-E	B	16.2/36
D30	1750000721	S.VAR HVC375BTRF-E	B	8.6/44.7
D31	1790001251	S.DIO MA2S1110GL	T	8.5/43.7
D32	1750001080	S.DIO RB886G T2R	T	64.1/76.5
D33	1750001080	S.DIO RB886G T2R	T	65.8/75.8
D34	1750000721	S.VAR HVC375BTRF-E	B	8.6/47.4
D35	1790001261	S.DIO MA2S077G0L	B	17.9/48.1
D37	1750000370	S.DIO DA221 TL	T	75.5/67.6
D38	1750000511	S.DIO UX9401F-STD/TR <INT> [F]	T	30/66
	1750000511	S.DIO UX9401F-STD/TR <INT> [D]		
	1750000511	S.DIO UX9401F-STD/TR <INT> [J]		
D39	1710001061	DIO L407CDB [B]		
	1710001061	DIO L407CDB [G]		
	1710001061	DIO L407CDB [H]		
	1710001061	DIO L407CDB [I]		
D42	1750001360	S.DIO L709CER (9401)	T	34.6/58.7
D45	1750000520	S.DIO DAN222TL	T	91.8/57.5
D46	1750000520	S.DIO DAN222TL	T	89.6/57.5
D47	1790001211	S.DIO 1SS375-TL-E	B	29.2/63.8
D48	1750000520	S.DIO DAN222TL	B	93/61.5
D49	1790001211	S.DIO 1SS375-TL-E	B	6/52.8
D50	1750000370	S.DIO DA221 TL	B	97.2/65.8
D51	1790001211	S.DIO 1SS375-TL-E	B	3.9/79.7
D52	1750000520	S.DIO DAN222TL	B	132.5/41
D53	1790001251	S.DIO MA2S1110GL	B	133.3/47.3
D55	1750000370	S.DIO DA221 TL	B	108.8/57.4
D56	1750000370	S.DIO DA221 TL	T	108.8/60.6
D57	1750000370	S.DIO DA221 TL	B	95.1/65.8
D58	1750000520	S.DIO DAN222TL	T	94/57.5
D59	1750000520	S.DIO DAN222TL	B	104/80.4
D62	1790000700	DIO DSA3A1		
D63	1750000520	S.DIO DAN222TL	B	110.3/80.9
D65	1750000520	S.DIO DAN222TL	B	129.7/58.9
D66	1790001621	S.DIO 1SV308(TPL3,F)	T	33.9/38.8
D67	1790001621	S.DIO 1SV308(TPL3,F)	T	33.9/37.5
D68	1790001621	S.DIO 1SV308(TPL3,F)	T	29.9/23.2
D69	1790001621	S.DIO 1SV308(TPL3,F)	T	31.2/23.2
D70	1750000351	S.DIO 1SV252(TE85L,F)	T	73.6/75.5
D71	1730002411	S.ZEN MAZ8200GHL	T	118.3/86.3
D72	1750000520	S.DIO DAN222TL	T	87.4/57.5
D73	1750000520	S.DIO DAN222TL	B	93/64.5
FI1	2020001410	CER CFWLB450KGFA-B0 (CFWM450G)		
FI2	2020002470	S.CER CFWKA450KHFA001-R0	T	15.4/9.3
FI3	2030000500	S.MON DSF753SBF 46.35 MHz (FL-401)	T	24.7/28.4
FI4	2030000670	S.MON DSF753SBF 46.35 MHz (FL-420)	T	35.6/28.4
FI5	2040001440	S.LC NFE31PT152Z1E9L (NFM60R20T152)	B	94.5/77
FI6	2040001440	S.LC NFE31PT152Z1E9L (NFM60R20T152)	B	94.5/73.7
FI7	2040001440	S.LC NFE31PT152Z1E9L (NFM60R20T152) [B]	B	94.5/70.3
	2040001440	S.LC NFE31PT152Z1E9L (NFM60R20T152) [G]		
	2040001440	S.LC NFE31PT152Z1E9L (NFM60R20T152) [H]		
	2040001440	S.LC NFE31PT152Z1E9L (NFM60R20T152) [I]		
X1	6050012380	S.XTA CR-826 DSA535SD 15.3 MHz	T	84.2/34.7
X2	6050011730	S.XTA CR-765 SMD-49TA 3.6864 MHz <KDS>	T	48.3/11.6
X3	6070000300	S.DIS JTBM450CX24 <JJE>	T	37.1/10.3
X4	6050012320	S.XTA CR-818 SMD-49 4.194304 MHz <KDS>	T	139.1/21.9
X5	6050011720	S.XTA CR-764 SMD-49TB 19.6608 MHz <KDS>	T	120.5/44.3
L1	6200004660	S.COI MLF1608A 1R8K-T	T	82.7/54.3
L2	6200003540	S.COI MLF1608D R22K-T	B	34.4/14.7
L3	6200004480	S.COI MLF1608D R82K-T	B	29.7/16.2
L4	6200007911	S.COI ELJRF 18NJFB	B	75.9/48.3
L5	6200007120	S.COI ELJND 1R0J	T	49.4/30.8
L6	6200007120	S.COI ELJND 1R0J	T	52.7/30.8
L7	6200007120	S.COI ELJND 1R0J	T	60.5/28.4
L8	6200007170	S.COI MLF1608A 3R3K-T	T	74/27.5
L9	6200007170	S.COI MLF1608A 3R3K-T	T	69.8/32
L10	6200010600	S.COI C6342A-67NG-A	T	51.2/39.2
L11	6200003640	S.COI MLF1608E 100K-T	T	48.3/33.6
L12	6200009910	S.COI C6342A-88NG-A	T	61.6/35.5
L13	6200007120	S.COI ELJND 1R0J	T	63.8/27
L14	6200003640	S.COI MLF1608E 100K-T	T	60/31.4
L15	6200012450	S.COI 0.25-1.9-8TL 73N (COAT) <COMO>	T	73.3/35.9
L16	6200008090	S.COI LQW2BHN68NJ03L	T	69.5/28
L17	6200003640	S.COI MLF1608E 100K-T	T	73.7/32.6
L18	6130003000	S.COI #617DB-1714=P3	B	39/36.2
L19	6130003000	S.COI #617DB-1714=P3	B	34.5/42.6
L20	6200009181	S.COI ELJRE R10JFA	T	57.3/48.3
L21	6200007911	S.COI ELJRF 18NJFB	B	66.3/51.2
L22	6200005721	S.COI ELJRE 33NGFA	B	40.6/48.1
L23	6200005721	S.COI ELJRE 33NGFA	B	45.5/48.1

[MAIN-A UNIT] (MDC compatible)

REF NO.	PARTS NO.	DESCRIPTION	M.	H/V LOCATION
L24	6130003000	S.COI #617DB-1714=P3	B	27/36.2
L25	6200009151	S.COI ELJRE 82NJFA	B	54.2/53.4
L26	6200010720	S.COI C2520C-56NG-A	B	20.9/37
L27	6200009181	S.COI ELJRE R10JFA	B	66.5/69.4
L28	6200010720	S.COI C2520C-56NG-A	B	11.7/35.1
L29	6200009171	S.COI ELJRE 47NJFA	B	70.5/70.8
L30	6200009171	S.COI ELJRE 47NJFA	T	72.6/72.7
L31	6200011410	S.COI C2520C-82NG-A	B	7.8/41.5
L32	6200011410	S.COI C2520C-82NG-A	B	9.9/50.6
L33	6200010050	S.COI AS080547-47N	T	33.3/73.9
L34	6200007750	S.COI LQW2BHN56NJ03L	B	13.2/51.7
L35	6200006991	S.COI ELJRE 56NGFA	B	20.1/50.7
L36	6200010420	S.COI FHW1210HC 1R0JGT <JJE>	B	39.2/66
L37	6200010050	S.COI AS080547-47N	T	30/58.5
L38	6200010050	S.COI AS080547-47N	T	21.6/58
L39	6200010050	S.COI AS080547-47N	T	12.5/57.5
L40	6200010050	S.COI AS080547-47N	T	10.5/81
L41	6200002861	S.COI NLV25T-4R7J	T	122.3/54.4
L42	6200005011	S.COI NLV25T-100J	T	40.7/42.1
L43	6200010680	S.COI C2520C-R22G-A (0.22U)	T	42.1/34.9
L44	6200010740	S.COI C2520C-R27G-A	T	37.8/35.3
L45	6200003960	S.COI MLF1608A 1R0K-T	T	71.3/72.7
L46	6200005661	S.COI ELJRE 10NGFA	T	78.3/42.3
L47	6200004480	S.COI MLF1608D R82K-T	T	23.3/20.9
L48	6200007750	S.COI LQW2BHN56NJ03L	B	23.9/39.8
L49	6200009571	S.COI ELJRE R12GFA [B]	B	6.6/36.3
	6200009571	S.COI ELJRE R12GFA [G]		
	6200009571	S.COI ELJRE R12GFA [H]		
	6200009571	S.COI ELJRE R12GFA [I]		
R1	7030005060	S.RES ERJ2GEJ 333 X (33K)	B	38.1/5.8
R2	7510001730	S.THE ERTJOEP 473J	T	90.4/35.6
R3	7030005050	S.RES ERJ2GEJ 103 X (10K)	T	79/11.9
R4	7030005700	S.RES ERJ2GEJ 274 X (270K)	B	88.5/18.9
R5	7030005090	S.RES ERJ2GEJ 104 X (100K)	T	90.4/34
R6	7030005160	S.RES ERJ2GEJ 105 X (1M)	T	84/19.4
R7	7030005230	S.RES ERJ2GEJ 334 X (330K)	T	84/17.5
R8	7410001130	S.ARR EXB28V102JX	T	86.1/52.4
R9	7030007570	S.RES ERJ2GEJ 122 X (1.2K)	B	34.3/11.6
R10	7030007060	S.RES ERJ2GEJ 684X (680K)	B	35.8/13.7
R11	7030010040	S.RES ERJ2GEJ-JPW	T	8.4/9.2
R12	7030004970	S.RES ERJ2GEJ 470 X (47)	T	31/17.2
R13	7030005600	S.RES ERJ2GEJ 273 X (27K)	T	8.8/15.9
R14	7030005210	S.RES ERJ2GEJ 822 X (8.2K)	T	7.5/7.4
R15	7030005070	S.RES ERJ2GEJ 683 X (68K)	B	93.3/14.4
R17	7030007570	S.RES ERJ2GEJ 122 X (1.2K)	B	93.3/15.3
R18	7030008300	S.RES ERJ2GEJ 184 X (180K)	B	79/11.8
R19	7030005230	S.RES ERJ2GEJ 334 X (330K)	T	89.3/9
R20	7030005090	S.RES ERJ2GEJ 104 X (100K)	T	85.6/8.3
R21	7030005070	S.RES ERJ2GEJ 683 X (68K)	T	86.6/8.3
R22	7030005050	S.RES ERJ2GEJ 103 X (10K)	B	38.1/7.5
R23	7030005050	S.RES ERJ2GEJ 103 X (10K)	B	38.1/9.2
R24	7030005060	S.RES ERJ2GEJ 333 X (33K)	B	37.2/10.5
R25	7030005120	S.RES ERJ2GEJ 102 X (1K)	B	100.9/51.4
R26	7030004980	S.RES ERJ2GEJ 101 X (100)	B	87.5/5.3
R27	7030007300	S.RES ERJ2GEJ 332 X (3.3K)	T	53.9/5.6
R28	7030010040	S.RES ERJ2GEJ-JPW	T	59.4/5.6
R29	7030005530	S.RES ERJ2GEJ 100 X (10)	T	116.4/14.5
R30	7030005170	S.RES ERJ2GEJ 474 X (470K)	B	37.2/9.2
R31	7030008410	S.RES ERJ2GEJ 392 X (3.9K)	B	36.3/9.2
R32	7030007340	S.RES ERJ2GEJ 153 X (15K)	B	37.2/7.5
R33	7030005160	S.RES ERJ2GEJ 105 X (1M)	T	80.7/8.4
R34	7030005040	S.RES ERJ2GEJ 472 X (4.7K)	T	80.7/7.2
R35	7030005120	S.RES ERJ2GEJ 102 X (1K)	T	77.6/9.5
R36	7030005030	S.RES ERJ2GEJ 152 X (1.5K)	B	27/14.7
R37	7030007300	S.RES ERJ2GEJ 332 X (3.3K)	B	15.2/8.6
R38	7030005210	S.RES ERJ2GEJ 822 X (8.2K)	T	22.9/6.2
R39	7030005600	S.RES ERJ2GEJ 273 X (27K)	T	24/9.1
R40	7030005170	S.RES ERJ2GEJ 474 X (470K)	T	25.9/10.6
R42	7030005090	S.RES ERJ2GEJ 104 X (100K)	B	94.8/11.7
R43	7030007300	S.RES ERJ2GEJ 332 X (3.3K)	B	94.8/10
R44	7030007340	S.RES ERJ2GEJ 153 X (15K)	B	90.7/11.9
R45	7030005220	S.RES ERJ2GEJ 223 X (22K)	B	92.8/10
R46	7030005040	S.RES ERJ2GEJ 472 X (4.7K)	T	92.1/14.1
R47	7030005050	S.RES ERJ2GEJ 103 X (10K)	T	92.1/13.1
R48	7030005060	S.RES ERJ2GEJ 333 X (33K)	B	50.9/8.6
R49	7030005160	S.RES ERJ2GEJ 105 X (1M)	B	49.7/13.7
R50	7030005090	S.RES ERJ2GEJ 104 X (100K)	B	49.7/11
R51	7030005290	S.RES ERJ2GEJ 682 X (6.8K)	T	52.4/7
R52	7030007340	S.RES ERJ2GEJ 153 X (15K)	T	59.1/12.5
R53	7030005000	S.RES ERJ2GEJ 471 X (470)	T	86.2/37.7
R54	7030010040	S.RES ERJ2GEJ-JPW	B	78.7/36.4
R55	7030005290	S.RES ERJ2GEJ 682 X (6.8K)	T	81.8/25.3
R56	7030005040	S.RES ERJ2GEJ 472 X (4.7K)	B	77.7/48.4
R57	7030005090	S.RES ERJ2GEJ 104 X (100K)	B	28.3/14.3
R58	7030005050	S.RES ERJ2GEJ 103 X (10K)	T	27.6/9
R59	7030005170	S.RES ERJ2GEJ 474 X (470K)	T	27.6/8.1
R60	7030005000	S.RES ERJ2GEJ 471 X (470)	T	30.9/10.2
R61	7030005040	S.RES ERJ2GEJ 472 X (4.7K)	T	28.8/8.5
R63	7030005220	S.RES ERJ2GEJ 223 X (22K)	B	92.8/8.3
R64	7030005220	S.RES ERJ2GEJ 223 X (22K)	B	92.8/6.5
R65	7030005090	S.RES ERJ2GEJ 104 X (100K)	B	50.9/9.5
R66	7030005050	S.RES ERJ2GEJ 103 X (10K)	T	86.6/11.8
R67	7030005290	S.RES ERJ2GEJ 682 X (6.8K)	T	53.4/7
R68	7030007290	S.RES ERJ2GEJ 222 X (2.2K)	B	53.7/17.9
R69	7030010040	S.RES ERJ2GEJ-JPW	T	85.6/13.6
R71	7030005090	S.RES ERJ2GEJ 104 X (100K)	T	57.7/6.3
R72	7030007290	S.RES ERJ2GEJ 222 X (2.2K)	T	64.9/55.6
R73	7030005000	S.RES ERJ2GEJ 471 X (470)	B	83.2/26.9
R74	7030007300	S.RES ERJ2GEJ 332 X (3.3K)	B	81.8/25.3
R75	7030009140	S.RES ERJ2GEJ 272 X (2.7K)	B	79.2/34
R76	7030007340	S.RES ERJ2GEJ 153 X (15K)	B	80.3/29.1
R77	7030005580	S.RES ERJ2GEJ 560 X (56)	T	78.2/47.2
R78	7030005070	S.RES ERJ2GEJ 683 X (68K)	B	81.5/34

M.=Mounted side (T: Mounted on the Top side, B: Mounted on the Bottom side)
S.=Surface mount

[MAIN-A UNIT] (MDC compatible)

REF NO.	PARTS NO.	DESCRIPTION	M.	H/V LOCATION
R79	7030005040	S.RES ERJ2GEJ 472 X (4.7K)	B	74.8/50
R80	7030005040	S.RES ERJ2GEJ 472 X (4.7K)	B	70/50.9
R81	7030005110	S.RES ERJ2GEJ 224 X (220K)	B	55.5/31.4
R82	7030005110	S.RES ERJ2GEJ 224 X (220K)	B	66.3/33.3
R83	7030008400	S.RES ERJ2GEJ 182 X (1.8K)	T	32.6/10.2
R85	7030005110	S.RES ERJ2GEJ 224 X (220K)	T	25.1/20.7
R87	7030007300	S.RES ERJ2GEJ 332 X (3.3K)	T	32.2/20.6
R88	7030005120	S.RES ERJ2GEJ 102 X (1K)	B	91.7/6.5
R90	7030005000	S.RES ERJ2GEJ 471 X (470)	B	89.4/18.9
R91	7030005700	S.RES ERJ2GEJ 274 X (270K)	T	85.6/11.8
R92	7030005090	S.RES ERJ2GEJ 104 X (100K)	T	87.3/13.4
R93	7030005310	S.RES ERJ2GEJ 124 X (120K)	T	83.9/8.2
R94	7030005080	S.RES ERJ2GEJ 823 X (82K)	T	108/34.7
R95	7030005720	S.RES ERJ2GEJ 563 X (56K)	T	108/33.8
R96	7030005240	S.RES ERJ2GEJ 473 X (47K)	B	63.7/15.5
R97	7030005060	S.RES ERJ2GEJ 333 X (33K)	B	53.3/16.6
R98	7030005030	S.RES ERJ2GEJ 152 X (1.5K)	B	62.1/19.4
R99	7030005240	S.RES ERJ2GEJ 473 X (47K)	B	60.2/19.4
R100	7030005030	S.RES ERJ2GEJ 152 X (1.5K)	B	77.9/34.4
R101	7030008280	S.RES ERJ2GEJ 271 X (270)	B	79.2/29.1
R102	7030005530	S.RES ERJ2GEJ 100 X (10)	T	23/22.9
R103	7030005600	S.RES ERJ2GEJ 273 X (27K)	B	29.9/23.8
R104	7030007280	S.RES ERJ2GEJ 331 X (330)	T	26.9/22.6
R105	7030005600	S.RES ERJ2GEJ 273 X (27K)	B	30.9/23.8
R106	7030007270	S.RES ERJ2GEJ 151 X (150)	T	34.3/22.5
R107	7030007340	S.RES ERJ2GEJ 153 X (15K)	B	129.7/52.3
R108	7030005240	S.RES ERJ2GEJ 473 X (47K)	B	82.3/18.9
R109	7030005700	S.RES ERJ2GEJ 274 X (270K)	B	81.3/18.9
R110	7030005050	S.RES ERJ2GEJ 103 X (10K)	T	78.4/20.2
R111	7030005050	S.RES ERJ2GEJ 103 X (10K)	T	95.9/28.3
R112	7030005700	S.RES ERJ2GEJ 274 X (270K)	T	80.8/20.1
R113	7030005240	S.RES ERJ2GEJ 473 X (47K)	B	57.9/19.4
R114	7030005090	S.RES ERJ2GEJ 104 X (100K)	B	53.7/13.3
R115	7030005090	S.RES ERJ2GEJ 104 X (100K)	T	114.4/18.4
R116	7030005090	S.RES ERJ2GEJ 104 X (100K)	B	85.3/7.3
R118	7030006610	S.RES ERJ2GEJ 394 X (390K)	T	89.5/11.7
R120	7030009280	S.RES ERJ2GEJ 391 X	T	30.3/34.3
R122	7030005600	S.RES ERJ2GEJ 273 X (27K)	T	32.3/35.2
R123	7030005600	S.RES ERJ2GEJ 273 X (27K)	T	33.5/35.2
R125	7030007270	S.RES ERJ2GEJ 151 X (150)	T	35/34
R127	7030005050	S.RES ERJ2GEJ 103 X (10K)	B	79.1/18.3
R128	7030008290	S.RES ERJ2GEJ 183 X (18K)	T	112.1/45.1
R129	7030005040	S.RES ERJ2GEJ 472 X (4.7K)	T	112.1/44.1
R130	7030005070	S.RES ERJ2GEJ 683 X (68K)	T	104.9/43.2
R131	7030005070	S.RES ERJ2GEJ 683 X (68K)	T	104.9/44.1
R132	7030004980	S.RES ERJ2GEJ 101 X (100)	T	114.4/17.5
R134	7030005160	S.RES ERJ2GEJ 105 X (1M)	T	128.9/26.3
R135	7030005160	S.RES ERJ2GEJ 105 X (1M)	T	128.9/25.3
R136	7030005160	S.RES ERJ2GEJ 105 X (1M)	T	128.9/24.2
R139	7410001140	S.ARR EXB28V104JX	T	130.6/20.6
R140	7030011000	S.RES RR0510P-392-D (3.9K)	T	48.1/47.2
R141	7030008340	S.RES RR0510P-182-D (1.8K)	T	50.8/45.4
R142	7030010040	S.RES ERJ2GEJ-JPW	T	49/47.2
R143	7030011000	S.RES RR0510P-392-D (3.9K)	T	58.7/42.2
R144	7030008340	S.RES RR0510P-182-D (1.8K)	T	61.7/40.4
R145	7030010040	S.RES ERJ2GEJ-JPW	T	59.6/42.2
R146	7030011000	S.RES RR0510P-392-D (3.9K)	T	71.8/45.8
R147	7030008340	S.RES RR0510P-182-D (1.8K)	T	70/41.9
R148	7030010040	S.RES ERJ2GEJ-JPW	T	71.8/44.9
R149	7030005310	S.RES ERJ2GEJ 124 X (120K)	T	69.1/36.3
R150	7030005240	S.RES ERJ2GEJ 473 X (47K)	T	89.8/15.5
R151	7030005060	S.RES ERJ2GEJ 333 X (33K)	T	91/16.1
R152	7030005090	S.RES ERJ2GEJ 104 X (100K)	T	88.9/16.4
R153	7030007300	S.RES ERJ2GEJ 332 X (3.3K)	T	39.9/32.2
R154	7030004970	S.RES ERJ2GEJ 470 X (47)	T	42.9/40.1
R155	7030005120	S.RES ERJ2GEJ 102 X (1K)	T	41.7/32.4
R156	7030004970	S.RES ERJ2GEJ 470 X (47)	T	42.5/41.3
R157	7030005090	S.RES ERJ2GEJ 104 X (100K)	B	33.7/23.6
R158	7030005240	S.RES ERJ2GEJ 473 X (47K)	T	112.1/42.3
R159	7030005240	S.RES ERJ2GEJ 473 X (47K)	T	112.1/40.5
R160	7030005240	S.RES ERJ2GEJ 473 X (47K)	T	113.8/38.7
R161	7030005070	S.RES ERJ2GEJ 683 X (68K)	T	104.9/46.8
R162	7030005240	S.RES ERJ2GEJ 473 X (47K)	T	128.2/14.4
R163	7030005240	S.RES ERJ2GEJ 473 X (47K)	T	128.7/16.3
R164	7030005240	S.RES ERJ2GEJ 473 X (47K)	T	129.4/14.4
R165	7030005230	S.RES ERJ2GEJ 334 X (330K)	T	128.7/17.8
R166	7030005230	S.RES ERJ2GEJ 334 X (330K)	T	128.7/18.7
R167	7030005230	S.RES ERJ2GEJ 334 X (330K)	T	129.8/16.2
R168	7030006581	S.RES ERA3YED 122V (1.2K)	T	53.6/47.5
R169	7030007230	S.RES ERA3YED 102V (1K)	T	63.8/42.6
R170	7030010390	S.RES ERA3YED 821V (820)	T	74.1/43.2
R171	7030005090	S.RES ERJ2GEJ 104 X (100K)	T	56.3/46.7
R172	7030008280	S.RES ERJ2GEJ 271 X (270)	B	36.4/46.4
R173	7030007270	S.RES ERJ2GEJ 151 X (150)	B	39/31.2
R174	7030004980	S.RES ERJ2GEJ 101 X (100)	B	34.6/38.7
R175	7030004980	S.RES ERJ2GEJ 101 X (100)	B	33/38.7
R176	7030005590	S.RES ERJ2GEJ 680 X (68)	B	31.3/37.4
R177	7030005590	S.RES ERJ2GEJ 680 X (68)	B	31.3/34.9
R178	7030005240	S.RES ERJ2GEJ 473 X (47K)	T	113.8/37.8
R179	7030008300	S.RES ERJ2GEJ 184 X (180K)	T	117.6/34.6
R180	7030005720	S.RES ERJ2GEJ 563 X (56K)	T	118.3/35.3
R181	7030005220	S.RES ERJ2GEJ 223 X (22K)	T	119/36
R182	7030005120	S.RES ERJ2GEJ 102 X (1K)	T	116.9/33.9
R183	7030005070	S.RES ERJ2GEJ 683 X (68K)	T	103.1/46.8
R184	7030005220	S.RES ERJ2GEJ 223 X (22K)	T	113.8/36.9
R185	7030005070	S.RES ERJ2GEJ 683 X (68K)	B	102.3/45.6
R186	7030005160	S.RES ERJ2GEJ 105 X (1M)	T	81.8/18.9
R187	7030005060	S.RES ERJ2GEJ 333 X (33K)	T	80.6/17.5
R188	7030005090	S.RES ERJ2GEJ 104 X (100K)	T	78.5/14.9
R189	7030005720	S.RES ERJ2GEJ 563 X (56K)	T	78.5/15.8
R190	7030005080	S.RES ERJ2GEJ 823 X (82K)	T	80.6/18.4
R191	7030004980	S.RES ERJ2GEJ 101 X (100)	T	60.5/47
R192	7030004980	S.RES ERJ2GEJ 101 X (100)	B	66.3/53.2
R193	7030005050	S.RES ERJ2GEJ 103 X (10K)	B	66.3/45.2
R194	7030005110	S.RES ERJ2GEJ 224 X (220K)	B	62.7/50.8

[MAIN-A UNIT] (MDC compatible)

REF NO.	PARTS NO.	DESCRIPTION	M.	H/V LOCATION
R195	7030009320	S.RES ERJ2GEJ 4R7 X (4.7)	B	55.8/50.3
R196	7030005120	S.RES ERJ2GEJ 102 X (1K)	B	65.2/42.8
R197	7030005050	S.RES ERJ2GEJ 103 X (10K)	B	64.7/44.5
R198	7030010090	S.RES ERJ2GEJ 180 X (18)	B	36/47.6
R199	7030008280	S.RES ERJ2GEJ 271 X (270)	B	37.3/47.6
R200	7030005050	S.RES ERJ2GEJ 103 X (10K)	B	8.4/20.6
R201	7410001130	S.ARR EXB28V102JX	B	117/51.7
R202	7030005090	S.RES ERJ2GEJ 104 X (100K)	B	122.5/44.8
R203	7030005120	S.RES ERJ2GEJ 102 X (1K)	B	127.4/47.3
R204	7410000750	S.ARR EXB-V4V 104JV (100K)	B	129.6/42.7
R205	7030008010	S.RES ERJ2GEJ 123 X (12K)	T	127.5/40.1
R206	7030005120	S.RES ERJ2GEJ 102 X (1K)	B	127/39.5
R207	7030005050	S.RES ERJ2GEJ 103 X (10K)	T	120.9/37.5
R208	7030005050	S.RES ERJ2GEJ 103 X (10K)	T	121.6/38.2
R209	7410001130	S.ARR EXB28V102JX	B	125.8/40.8
R210	7030008010	S.RES ERJ2GEJ 123 X (12K)	T	124.2/38.4
R211	7030008010	S.RES ERJ2GEJ 123 X (12K)	T	125.9/41.1
R212	7030005160	S.RES ERJ2GEJ 105 X (1M)	T	122.1/41.1
R213	7030005090	S.RES ERJ2GEJ 104 X (100K)	B	55.3/51.8
R214	7030004980	S.RES ERJ2GEJ 101 X (100)	B	56.4/54
R215	7030005050	S.RES ERJ2GEJ 103 X (10K)	B	63.5/61.3
R216	7030005590	S.RES ERJ2GEJ 680 X (68)	B	61.9/62.3
R218	7030010040	S.RES ERJ2GEJ-JPW	B	56.4/51.8
R219	7030005050	S.RES ERJ2GEJ 103 X (10K)	B	46/49.8
R220	7030005040	S.RES ERJ2GEJ 472 X (4.7K)	B	49.3/52
R221	7030005050	S.RES ERJ2GEJ 103 X (10K)	B	44.4/49.8
R222	7030005090	S.RES ERJ2GEJ 104 X (100K)	B	17.7/33.9
R223	7030005090	S.RES ERJ2GEJ 104 X (100K)	B	16.2/33.9
R224	7030005050	S.RES ERJ2GEJ 103 X (10K)	B	15.7/32.7
R225	7030005000	S.RES ERJ2GEJ 471 X (470)	B	8/19.2
R226	7030004980	S.RES ERJ2GEJ 101 X (100)	T	109.7/53.5
R227	7030005090	S.RES ERJ2GEJ 104 X (100K)	B	107.1/49.3
R228	7410001140	S.ARR EXB28V104JX	T	103.3/49
R230	7030005050	S.RES ERJ2GEJ 103 X (10K)	B	124.7/42.7
R232	7030005530	S.RES ERJ2GEJ 100 X (10)	T	120.4/41.1
R233	7410000750	S.ARR EXB-V4V 104JV (100K)	T	130/34.7
R234	7410001130	S.ARR EXB28V102JX	B	129.4/34.4
R236	7030009530	S.RES ERJ2GEJ 270 X (27)	B	63.9/71.5
R237	7030005040	S.RES ERJ2GEJ 472 X (4.7K)	B	65.3/69.7
R238	7030008010	S.RES ERJ2GEJ 123 X (12K)	B	61.9/65.1
R240	7030005570	S.RES ERJ2GEJ 820 X (82)	B	62.4/67.4
R241	7030004980	S.RES ERJ2GEJ 101 X (100)	B	58.5/66
R242	7030004970	S.RES ERJ2GEJ 470 X (47)	T	12/33.1
R243	7030009320	S.RES ERJ2GEJ 4R7 X (4.7)	T	10/36
R244	7030005050	S.RES ERJ2GEJ 103 X (10K) [B]	B	15.1/36.3
	7030004980	S.RES ERJ2GEJ 101 X (100) [F]		
	7030004980	S.RES ERJ2GEJ 101 X (100) [D]		
	7030005050	S.RES ERJ2GEJ 103 X (10K) [G]		
	7030004980	S.RES ERJ2GEJ 101 X (100) [J]		
	7030005050	S.RES ERJ2GEJ 103 X (10K) [H]		
	7030005050	S.RES ERJ2GEJ 103 X (10K) [I]		
R245	7030005530	S.RES ERJ2GEJ 100 X (10)	B	11.9/39.9
R246	7030005090	S.RES ERJ2GEJ 104 X (100K)	B	7.5/38.6
R247	7030004990	S.RES ERJ2GEJ 221 X (220)	B	7.7/36.3
R248	7410001130	S.ARR EXB28V102JX	B	103.9/47.9
R249	7410001130	S.ARR EXB28V102JX	B	123.9/27.6
R250	7410001130	S.ARR EXB28V102JX	B	122.1/25.7
R251	7410001140	S.ARR EXB28V104JX	T	124.7/28.7
R252	7410001140	S.ARR EXB28V104JX	T	122.1/25.7
R253	7030008290	S.RES ERJ2GEJ 183 X (18K)	T	9.5/40.5
R254	7030005050	S.RES ERJ2GEJ 103 X (10K)	T	7.4/42.2
R255	7030005310	S.RES ERJ2GEJ 124 X (120K)	B	6.6/38.6
R257	7030008400	S.RES ERJ2GEJ 182 X (1.8K)	T	9/42.2
R258	7030005170	S.RES ERJ2GEJ 474 X (470K)	T	11/44.5
R259	7030005090	S.RES ERJ2GEJ 104 X (100K)	B	6/45.1
R260	7030005090	S.RES ERJ2GEJ 104 X (100K)	B	6/47
R261	7410001130	S.ARR EXB28V102JX	B	99.7/43.5
R262	7410001130	S.ARR EXB28V102JX	T	100.2/37.4
R263	7410001130	S.ARR EXB28V102JX	B	97/40.7
R264	7410001140	S.ARR EXB28V104JX	T	103.8/37
R265	7030005050	S.RES ERJ2GEJ 103 X (10K)	T	103.8/39.2
R266	7410001130	S.ARR EXB28V102JX	B	120.1/23.5
R267	7410001130	S.ARR EXB28V102JX	B	118.3/21.7
R268	7410001130	S.ARR EXB28V102JX	B	116.5/19.9
R269	7030005090	S.RES ERJ2GEJ 104 X (100K)	T	119.4/20.8
R271	7030004980	S.RES ERJ2GEJ 101 X (100)	T	77.6/78.5
R272	7030007280	S.RES ERJ2GEJ 331 X (330)	T	61/76.5
R273	7030005050	S.RES ERJ2GEJ 103 X (10K) [F]	T	62.3/76.1
	7030005050	S.RES ERJ2GEJ 103 X (10K) [D]		
	7030005050	S.RES ERJ2GEJ 103 X (10K) [J]		
R274	7030004980	S.RES ERJ2GEJ 101 X (100)	T	56.7/69.3
R275	7030005030	S.RES ERJ2GEJ 152 X (1.5K)	T	64.8/73.8
R276	7030007300	S.RES ERJ2GEJ 332 X (3.3K) [B]	T	65.8/73.8
	7030005040	S.RES ERJ2GEJ 472 X (4.7K) [F]		
	7030005040	S.RES ERJ2GEJ 472 X (4.7K) [D]		
	7030007300	S.RES ERJ2GEJ 332 X (3.3K) [G]		
	7030005040	S.RES ERJ2GEJ 472 X (4.7K) [J]		
	7030007300	S.RES ERJ2GEJ 332 X (3.3K) [H]		
	7030007300	S.RES ERJ2GEJ 332 X (3.3K) [I]		
R277	7030005050	S.RES ERJ2GEJ 103 X (10K)	B	4.8/45.6
R278	7030005050	S.RES ERJ2GEJ 103 X (10K)	T	132.2/29.9
R279	7030005090	S.RES ERJ2GEJ 104 X (100K)	T	131.3/29.9
R280	7410001130	S.ARR EXB28V102JX	B	95.2/38.9
R281	7030005090	S.RES ERJ2GEJ 104 X (100K)	T	93.7/48.8
R282	7410000750	S.ARR EXB-V4V 104JV (100K)	T	97.2/45.3
R283	7410001130	S.ARR EXB28V102JX	T	103.1/21.7
R284	7030005120	S.RES ERJ2GEJ 102 X (1K)	T	111.2/25.1
R285	7410001130	S.ARR EXB28V102JX	B	107.1/19.9
R286	7410001140	S.ARR EXB28V104JX	T	121.7/22.2

M.=Mounted side (T: Mounted on the Top side, B: Mounted on the Bottom side)
S.=Surface mount

[MAIN-A UNIT] (MDC compatible)

REF NO.	PARTS NO.	DESCRIPTION	M.	H/V LOCATION
R287	7030005580	S.RES ERJ2GEJ 560 X (56) [B]	T	55.7/72.6
	7030004990	S.RES ERJ2GEJ 221 X (220) [F]		
	7030004990	S.RES ERJ2GEJ 221 X (220) [D]		
	7030005580	S.RES ERJ2GEJ 560 X (56) [G]		
	7030004990	S.RES ERJ2GEJ 221 X (220) [J]		
	7030005580	S.RES ERJ2GEJ 560 X (56) [H]		
	7030005580	S.RES ERJ2GEJ 560 X (56) [I]		
R288	7030005100	S.RES ERJ2GEJ 154 X (150K)	T	54.1/68.2
R289	7030005170	S.RES ERJ2GEJ 474 X (470K) [B]	B	38/63.7
	7030005170	S.RES ERJ2GEJ 474 X (470K) [G]		
	7030005170	S.RES ERJ2GEJ 474 X (470K) [H]		
	7030005170	S.RES ERJ2GEJ 474 X (470K) [I]		
R290	7520000260	S.POS PRF18BB471QB1RB [B]	T	33.9/63
	7520000260	S.POS PRF18BB471QB1RB [G]		
	7520000260	S.POS PRF18BB471QB1RB [H]		
	7520000260	S.POS PRF18BB471QB1RB [I]		
R291	7030005120	S.RES ERJ2GEJ 102 X (1K)	T	109.2/24.5
R292	7030006070	S.RES ERJ12YJ101U (100)	B	43.6/66.1
R293	7030005120	S.RES ERJ2GEJ 102 X (1K)	T	50.6/70.5
R294	7030005050	S.RES ERJ2GEJ 103 X (10K)	T	51.7/68.2
R295	7030008290	S.RES ERJ2GEJ 183 X (18K)	T	50.6/71.4
R296	7030005040	S.RES ERJ2GEJ 472 X (4.7K)	T	53.8/64.2
R297	7030008010	S.RES ERJ2GEJ 123 X (12K)	T	50.5/68.6
R298	7030005090	S.RES ERJ2GEJ 104 X (100K)	T	45.6/69.9
R300	7030005050	S.RES ERJ2GEJ 103 X (10K)	B	99.9/59.6
R301	7030007290	S.RES ERJ2GEJ 222 X (2.2K)	T	106.2/55.6
R302	7030000480	S.RES MCR10EZHJ 6.8K (682)	T	79/64.4
R303	7030000480	S.RES MCR10EZHJ 6.8K (682)	T	80.9/64.4
R304	7030000440	S.RES MCR10EZHJ 3.3K (332)	T	82.8/64.4
R305	7030005050	S.RES ERJ2GEJ 103 X (10K)	T	40.3/19.4
R306	7030005040	S.RES ERJ2GEJ 472 X (4.7K)	T	41/21.7
R307	7030005050	S.RES ERJ2GEJ 103 X (10K)	B	27/63
R309	7030005070	S.RES ERJ2GEJ 683 X (68K)	T	89.9/7.2
R310	7030004980	S.RES ERJ2GEJ 101 X (100)	B	109.3/62.8
R311	7030000220	S.RES MCR10EZHJ 47 (470)	B	15/76.9
R312	7030005700	S.RES ERJ2GEJ 274 X (270K)	B	31.5/62.4
R313	7030003370	S.RES ERJ3GEYJ 271 V (270)	B	8.6/54
R314	7030005600	S.RES ERJ2GEJ 273 X (27K)	B	3/53
R315	7030000220	S.RES MCR10EZHJ 47 (470)	B	3.5/57.4
R316	7030005170	S.RES ERJ2GEJ 474 X (470K)	T	90.8/11.3
R317	7030005160	S.RES ERJ2GEJ 105 X (1M)	B	108.3/83.7
R318	7030005160	S.RES ERJ2GEJ 105 X (1M)	B	112.5/82.7
R319	7030005120	S.RES ERJ2GEJ 102 X (1K)	B	112.1/81.5
R320	7030005160	S.RES ERJ2GEJ 105 X (1M)	B	107.2/82.4
R321	7030004970	S.RES ERJ2GEJ 470 X (47)	B	108.4/82
R322	7030005600	S.RES ERJ2GEJ 273 X (27K)	B	2.1/79.2
R323	7030003370	S.RES ERJ3GEYJ 271 V (270)	B	6.3/78.7
R324	7030000620	S.RES MCR10EZHJ 100 K (104)	B	5.6/85.5
R325	7030005050	S.RES ERJ2GEJ 103 X (10K)	B	130.5/45.2
R326	7030005090	S.RES ERJ2GEJ 104 X (100K)	B	131.8/51.7
R327	7030005120	S.RES ERJ2GEJ 102 X (1K)	B	131.1/54.2
R328	7030005090	S.RES ERJ2GEJ 104 X (100K)	B	134.2/51.7
R332	7030005090	S.RES ERJ2GEJ 104 X (100K)	T	109.6/27.9
R333	7030005120	S.RES ERJ2GEJ 102 X (1K)	T	109.6/26.9
R334	7520000270	S.POS PRG21BC4R7MM1RA	T	101.4/79.7
R335	7030005050	S.RES ERJ2GEJ 103 X (10K)	T	101.8/83.9
R336	7030005120	S.RES ERJ2GEJ 102 X (1K)	T	111.3/78.5
R337	7410001130	S.ARR EXB28V102JX	T	104.6/75.9
R338	7030005651	S.RES ERA3YKD 304V (300K)	T	113.6/54.3
R339	7030005871	S.RES ERA3YKD 104V (100K)	T	113.6/52.9
R340	7030003560	S.RES ERJ3GEYJ 103 V (10K)	T	136.3/65.7
R341	7030003560	S.RES ERJ3GEYJ 103 V (10K)	B	130.7/85.9
R342	7030005090	S.RES ERJ2GEJ 104 X (100K)	B	135.4/52.2
R343	7030007290	S.RES ERJ2GEJ 222 X (2.2K)	B	138.2/49.4
R344	7030008270	S.RES RR0510P-104-D (100K)	B	133.3/54.6
R345	7030008270	S.RES RR0510P-104-D (100K)	B	133.3/56.3
R346	7030008410	S.RES ERJ2GEJ 392 X (3.9K)	B	137/52.2
R347	7030005050	S.RES ERJ2GEJ 103 X (10K)	B	137.8/53.7
R348	7030005700	S.RES ERJ2GEJ 274 X (270K)	B	131/75.5
R349	7030005090	S.RES ERJ2GEJ 104 X (100K)	B	129.8/76.5
R350	7030005120	S.RES ERJ2GEJ 102 X (1K)	B	139.1/47.8
R351	7030004980	S.RES ERJ2GEJ 101 X (100)	B	136.3/38.1
R352	7030008300	S.RES ERJ2GEJ 184 X (180K)	B	139.7/39
R353	7030005230	S.RES ERJ2GEJ 334 X (330K)	B	138.2/47.8
R354	7030010040	S.RES ERJ2GEJ-JPW	T	140.4/36
R355	7030008280	S.RES ERJ2GEJ 271 X (270)	B	139.7/34.3
R356	7540000290	ABS ERZV10D220		
R359	7030005090	S.RES ERJ2GEJ 104 X (100K)	B	114.8/82.9
R360	7030005090	S.RES ERJ2GEJ 104 X (100K)	T	80.6/5.3
R361	7030005600	S.RES ERJ2GEJ 273 X (27K)	T	78.4/5.3
R362	7030005050	S.RES ERJ2GEJ 103 X (10K)	T	124.8/50.2
R363	7030005120	S.RES ERJ2GEJ 102 X (1K)	T	42.9/38.3
R364	7030009140	S.RES ERJ2GEJ 272 X (2.7K)	T	42.9/37.4
R365	7030004970	S.RES ERJ2GEJ 470 X (47)	T	38.3/37.9
R366	7030005090	S.RES ERJ2GEJ 104 X (100K)	B	131.4/63.4
R367	7030005040	S.RES ERJ2GEJ 472 X (4.7K)	B	130.1/63
R368	7030005050	S.RES ERJ2GEJ 103 X (10K)	T	78.3/7.6
R370	7030005010	S.RES ERJ2GEJ 681 X (680)	T	71.2/70.4
R371	7030005050	S.RES ERJ2GEJ 103 X (10K)	T	119.5/84.6
R372	7030005040	S.RES ERJ2GEJ 472 X (4.7K)	T	25.9/8.1
R373	7030005040	S.RES ERJ2GEJ 472 X (4.7K)	T	74/21.6
R375	7030005030	S.RES ERJ2GEJ 152 X (1.5K)	T	27.6/5.3
R376	7030005160	S.RES ERJ2GEJ 105 X (1M)	B	109.1/12.1
R377	7030005160	S.RES ERJ2GEJ 105 X (1M)	B	110.9/12.1
R378	7410001140	S.ARR EXB28V104JX	B	100.7/18.3
R379	7030005090	S.RES ERJ2GEJ 104 X (100K)	T	111.6/23.8
R386	7030005120	S.RES ERJ2GEJ 102 X (1K)	T	105.8/85.1
R387	7030005120	S.RES ERJ2GEJ 102 X (1K)	T	107.8/85.1
R389	7030005090	S.RES ERJ2GEJ 104 X (100K)	T	110.4/10.7
R390	7030008300	S.RES ERJ2GEJ 184 X (180K)	B	23/10.5
R391	7030005120	S.RES ERJ2GEJ 102 X (1K)	B	23.9/7.3
R392	7030008400	S.RES ERJ2GEJ 182 X (1.8K)	B	29.2/5.6
R393	7030004980	S.RES ERJ2GEJ 101 X (100)	B	28.3/7.3
R394	7030004980	S.RES ERJ2GEJ 101 X (100)	B	23/8.9
R395	7030005290	S.RES ERJ2GEJ 682 X (6.8K)	B	22.1/7.3

[MAIN-A UNIT] (MDC compatible)

REF NO.	PARTS NO.	DESCRIPTION	M.	H/V LOCATION
R396	7030009290	S.RES ERJ2GEJ 562 X (5.6K)	B	22.1/5.6
R397	7030005120	S.RES ERJ2GEJ 102 X (1K)	B	79.8/46.1
R398	7030005120	S.RES ERJ2GEJ 102 X (1K)	T	79.3/41.3
R399	7030005050	S.RES ERJ2GEJ 103 X (10K)	B	95.8/10
R400	7030005030	S.RES ERJ2GEJ 152 X (1.5K)	B	23/5.6
C1	4030017420	S.CER ECJ0EC1H470J	T	88.9/54.3
C2	4030017420	S.CER ECJ0EC1H470J	T	89.9/54.3
C3	4030017420	S.CER ECJ0EC1H470J	T	41.5/15.4
C4	4030017420	S.CER ECJ0EC1H470J	B	50/15
C5	4030017460	S.CER ECJ0EB1E102K	T	89.4/34
C6	4550007080	S.TAN TEESVA 1C 106M8R	T	80.8/55.1
C7	4030017420	S.CER ECJ0EC1H470J	T	84/18.4
C8	4030017420	S.CER ECJ0EC1H470J	T	89.9/52
C9	4030016930	S.CER ECJ0EB1A104K	T	88.9/52
C10	4030016930	S.CER ECJ0EB1A104K	T	80.6/50.7
C11	4030016930	S.CER ECJ0EB1A104K	T	10.9/18.8
C12	4030016930	S.CER ECJ0EB1A104K	T	8.5/7.4
C13	4030016930	S.CER ECJ0EB1A104K	T	85.6/10
C14	4030016930	S.CER ECJ0EB1A104K	T	86.6/10
C15	4030017460	S.CER ECJ0EB1E102K	T	41.5/7.7
C16	4550000460	S.TAN TEESVA 1C 105M8R	T	42.7/6.2
C17	4550000460	S.TAN TEESVA 1C 105M8R	B	42.7/6.2
C18	4030017420	S.CER ECJ0EC1H470J	T	41.5/14.5
C19	4030017420	S.CER ECJ0EC1H470J	B	50/15.9
C20	4030016970	S.CER ECJ0EB1C223K	B	100.9/52.3
C21	4030017420	S.CER ECJ0EC1H470J	T	41.5/13.5
C22	4030017420	S.CER ECJ0EC1H470J	T	41.5/12.6
C23	4030016930	S.CER ECJ0EB1A104K	T	51.8/5.6
C24	4030017660	S.CER ECJ0EC1H330J	B	39.8/9.8
C25	4030017420	S.CER ECJ0EC1H470J	T	61.4/6
C26	4030016930	S.CER ECJ0EB1A104K	B	37.2/5.8
C27	4030018240	S.CER ECJ0EB1E562K	B	36.3/7.5
C28	4030016790	S.CER ECJ0EB1C103K	T	79.3/7.6
C29	4030017460	S.CER ECJ0EB1E102K	T	79/13.6
C30	4030016930	S.CER ECJ0EB1A104K	T	78.1/13.6
C31	4030017460	S.CER ECJ0EB1E102K	T	80.6/51.7
C32	4030017500	S.CER ECJ0EC1H560J	B	33.3/15.9
C33	4030016930	S.CER ECJ0EB1A104K	B	34.8/12.8
C34	4030017570	S.CER ECJ0EC1H040B	B	32.1/15.4
C35	4030017590	S.CER ECJ0EC1H070C	B	30.9/15.9
C36	4030016930	S.CER ECJ0EB1A104K	T	22.4/14.9
C37	4030017360	S.CER ECJ0EC1H030B	B	28.3/15.4
C38	4030016930	S.CER ECJ0EB1A104K	T	22/6.2
C39	4030016930	S.CER ECJ0EB1A104K	B	13.6/6.2
C40	4030016930	S.CER ECJ0EB1A104K	T	23.8/6.2
C41	4030016930	S.CER ECJ0EB1A104K	T	22/12.5
C42	4030016930	S.CER ECJ0EB1A104K	T	23/12.5
C43	4030017680	S.CER ECJ0EC1H820J	T	26.4/9.4
C44	4030017680	S.CER ECJ0EC1H820J	T	25.5/9.4
C45	4030017790	S.CER ECJ0EB1E682K	B	91.7/10
C46	4030016930	S.CER ECJ0EB1A104K	B	93.8/10
C47	4030016970	S.CER ECJ0EB1C223K	T	92.1/15.1
C48	4030017710	S.CER ECJ0EC1H181J	B	49.7/9.1
C49	4550007080	S.TAN TEESVA 1C 106M8R	T	52.1/15.4
C50	4030017460	S.CER ECJ0EB1E102K	T	54.3/12
C51	4030017400	S.CER ECJ0EC1H220J	T	47.8/19
C52	4030017400	S.CER ECJ0EC1H220J	T	44.7/7.8
C53	4030017900	S.CER ECJ0EB1C123K	T	59.1/10.6
C54	4030018080	S.CER ECJ0EB1H182K	T	59.1/11.5
C55	4030016790	S.CER ECJ0EB1C103K	T	64.5/57
C56	4030017620	S.CER ECJ0EC1H100C	T	87.7/35.5
C57	4030016930	S.CER ECJ0EB1A104K	T	80.1/36.7
C58	4030017430	S.CER ECJ0EC1H101J	T	85.2/38.6
C59	4030017460	S.CER ECJ0EB1E102K	T	81.8/24.3
C60	4030017420	S.CER ECJ0EC1H470J	T	82.9/41.5
C63	4030017620	S.CER ECJ0EC1H100C	T	84/39.1
C64	4030017780	S.CER ECJ0EB1E472K	T	81.3/41.3
C65	4030017460	S.CER ECJ0EB1E102K	T	27.6/10.6
C66	4550006050	S.TAN TEESVA 0J 106M8R	T	31.1/6.8
C67	4030017460	S.CER ECJ0EB1E102K	T	27.6/7.1
C68	4030017460	S.CER ECJ0EB1E102K	T	30.5/9
C69	4030017460	S.CER ECJ0EB1E102K	T	32.6/15.4
C70	4030017420	S.CER ECJ0EC1H470J	B	28.3/13.4
C71	4030016940	S.CER ECJ0EB1A393K	B	91.7/8.3
C72	4030018860	S.CER ECJ0EB0J105K	B	50.7/11
C73	4030017750	S.CER ECJ0EB1E122K	B	51.3/16.6
C74	4030016930	S.CER ECJ0EB1A104K	B	52.3/16.6
C75	4030016930	S.CER ECJ0EB1A104K	B	56.2/12.6
C77	4030017460	S.CER ECJ0EB1E102K	B	54.2/16.6
C78	4030017460	S.CER ECJ0EB1E102K	B	53.7/9
C79	4550007080	S.TAN TEESVA 1C 106M8R	T	66.5/55.3
C80	4030017780	S.CER ECJ0EB1E472K	B	79.2/35
C81	4550000460	S.TAN TEESVA 1C 105M8R	B	82.2/36.4
C82	4030017460	S.CER ECJ0EB1E102K	B	84.1/26.9
C83	4550000460	S.TAN TEESVA 1C 105M8R	B	84/32.5
C84	4030017460	S.CER ECJ0EB1E102K	T	78.2/48.8
C85	4030017380	S.CER ECJ0EC1H050B	B	77.1/47.2
C86	4030017350	S.CER ECJ0EC1H020B	B	74.8/48.3
C87	4030017580	S.CER ECJ0EC1H060C	B	73.7/48.3
C88	4030017380	S.CER ECJ0EC1H050B	B	72.4/48.6
C89	4030017580	S.CER ECJ0EC1H060C	B	71.1/49.1
C90	4030017350	S.CER ECJ0EC1H020B	B	70/49.1
C91	4030016790	S.CER ECJ0EB1C103K	T	27.3/17.3
C92	4030017460	S.CER ECJ0EB1E102K	T	25.1/22.4
C93	4030017680	S.CER ECJ0EC1H820J	T	32.6/12.6
C94	4030017460	S.CER ECJ0EB1E102K	B	27.8/12.5
C95	4030016790	S.CER ECJ0EB1C103K	T	28.9/20.1
C98	4030016930	S.CER ECJ0EB1A104K	B	89.3/7.3
C99	4030016930	S.CER ECJ0EB1A104K	B	90.7/14.8
C100	4030016930	S.CER ECJ0EB1A104K	T	87.3/14.3
C101	4030017710	S.CER ECJ0EC1H181J	T	83.9/7.2
C102	4030016930	S.CER ECJ0EB1A104K	T	108/32.8
C103	4030016930	S.CER ECJ0EB1A104K	B	55.3/19.3

M.=Mounted side (T: Mounted on the Top side, B: Mounted on the Bottom side)
S.=Surface mount

[MAIN-A UNIT] (MDC compatible)

REF NO.	PARTS NO.	DESCRIPTION	M.	H/V LOCATION
C104	4550003250	S.TAN TEESVA 1V 474M8R	B	67.2/24.2
C105	4030017420	S.CER ECJ0EC1H470J	T	49.2/29.4
C106	4030017460	S.CER ECJ0EB1E102K	B	78/29.1
C107	4030016930	S.CER ECJ0EB1A104K	B	54.2/28.8
C109	4550006480	S.TAN TEESVA 1C 475M8R	B	56.1/27.7
C110	4030017420	S.CER ECJ0EC1H470J	T	60.1/27
C111	4030016930	S.CER ECJ0EB1A104K	B	66.3/30.3
C112	4030017460	S.CER ECJ0EB1E102K	B	67.4/30.3
C113	4030017420	S.CER ECJ0EC1H470J	T	72.1/26.6
C114	4030016790	S.CER ECJ0EB1C103K	T	24.2/22.3
C115	4030016790	S.CER ECJ0EB1C103K	T	21.4/22
C116	4030016790	S.CER ECJ0EB1C103K	T	28.5/22.6
C118	4030017640	S.CER ECJ0EC1H150J	T	20.5/28.7
C120	4030016790	S.CER ECJ0EB1C103K	T	32.6/22.5
C122	4030017660	S.CER ECJ0EC1H330J	T	39.8/28.9
C124	4030016930	S.CER ECJ0EB1A104K	B	90.3/18.9
C125	4030017460	S.CER ECJ0EB1E102K	B	128.5/52.6
C126	4030016930	S.CER ECJ0EB1A104K	T	79.6/20.6
C127	4030016930	S.CER ECJ0EB1A104K	B	82.8/20.1
C128	4030016930	S.CER ECJ0EB1A104K	T	78.4/19.3
C129	4030016930	S.CER ECJ0EB1A104K	B	63.7/16.4
C130	4030016930	S.CER ECJ0EB1A104K	B	135.6/25.4
C131	4030017660	S.CER ECJ0EC1H330J	T	135.9/25.7
C132	4030017660	S.CER ECJ0EC1H330J	T	135.9/18
C133	4030018010	S.CER ECJ0EC1H360J	T	48.1/35.5
C134	4030017640	S.CER ECJ0EC1H150J	T	49.4/34.8
C135	4030017660	S.CER ECJ0EC1H330J	T	64.1/32.5
C136	4030017340	S.CER ECJ0EC1H010B	T	71.1/30.8
C137	4030017570	S.CER ECJ0EC1H040B	T	71.1/29.9
C138	4030017730	S.CER ECJ0EB1E471K	T	71.9/33
C139	4030017390	S.CER ECJ0EC1H180J	T	62.1/32
C140	4030017360	S.CER ECJ0EC1H030B	T	72.5/30.7
C141	4030017360	S.CER ECJ0EC1H030B	T	72.1/29
C142	4030018860	S.CER ECJ0EB0J105K	T	89.5/12.7
C143	4030017400	S.CER ECJ0EC1H220J	T	71.3/36.6
C145	4030016790	S.CER ECJ0EB1C103K	T	31.4/35.2
C146	4030017610	S.CER ECJ0EC1H090C	T	35/33.1
C147	4030016790	S.CER ECJ0EB1C103K	T	34.5/35.2
C148	4030016790	S.CER ECJ0EB1C103K	T	30.9/26.4
C149	4030016930	S.CER ECJ0EB1A104K	B	78.2/17.4
C150	4030018560	S.CER C2012 JB 1A 475K-T	B	86.9/19.8
C151	4030016930	S.CER ECJ0EB1A104K	T	112.1/46
C152	4030016930	S.CER ECJ0EB1A104K	T	109.6/34.3
C153	4030017460	S.CER ECJ0EB1E102K	T	111.4/34.3
C154	4030018860	S.CER ECJ0EB0J105K	T	82.7/19.8
C155	4030017420	S.CER ECJ0EC1H470J	T	110.3/38.7
C156	4030017910	S.CER ECJ0EB1H152K	T	104.9/42.3
C157	4030017420	S.CER ECJ0EC1H470J	T	110.8/48.6
C158	4030017430	S.CER ECJ0EC1H101J	T	110.3/37.8
C159	4030017460	S.CER ECJ0EB1E102K	T	120.3/5.5
C160	4030017460	S.CER ECJ0EB1E102K	B	130.6/25.4
C161	4030018010	S.CER ECJ0EC1H360J	T	50.8/43.8
C162	4030017590	S.CER ECJ0EC1H070C	T	52.1/43.4
C163	4030017660	S.CER ECJ0EC1H330J	T	58.7/39.4
C164	4030017660	S.CER ECJ0EC1H330J	T	48.6/45.8
C165	4030017660	S.CER ECJ0EC1H330J	T	49.9/45.4
C166	4030017580	S.CER ECJ0EC1H060C	T	60.1/38.9
C167	4030017420	S.CER ECJ0EC1H470J	T	70/38.9
C168	4030017660	S.CER ECJ0EC1H330J	T	59.1/40.8
C169	4030017660	S.CER ECJ0EC1H330J	T	60.7/40.4
C170	4030017550	S.CER ECJ0EC1H1R5B	T	70.4/36.6
C171	4030017570	S.CER ECJ0EC1H040B	T	70/37.9
C172	4030017400	S.CER ECJ0EC1H220J	T	70/42.9
C173	4030017400	S.CER ECJ0EC1H220J	T	70/43.9
C174	4030017640	S.CER ECJ0EC1H150J	T	38.3/38.8
C175	4030016790	S.CER ECJ0EB1C103K	B	41.4/39.4
C176	4030016930	S.CER ECJ0EB1A104K	B	41/33.2
C177	4030017730	S.CER ECJ0EB1E471K	B	41/32.2
C178	4030016790	S.CER ECJ0EB1C103K	B	34.5/33
C180	4030017740	S.CER ECJ0EB1E821K	T	109.2/48.6
C181	4030016930	S.CER ECJ0EB1A104K	T	112.1/43.2
C182	4030016780	S.CER ECJ0EB1C153K	T	112.1/39.6
C183	4030017420	S.CER ECJ0EC1H470J	T	104.9/45
C184	4030017760	S.CER ECJ0EB1H222K	T	104.9/45.9
C185	4030017690	S.CER ECJ0EC1H121J	T	107.8/48.6
C186	4030016790	S.CER ECJ0EB1C103K	T	51.7/45.4
C187	4030017460	S.CER ECJ0EB1E102K	T	52.6/45.4
C188	4030016790	S.CER ECJ0EB1C103K	T	62.7/40.4
C189	4030017460	S.CER ECJ0EB1E102K	T	63.7/40.4
C190	4030017540	S.CER ECJ0EC1HR75B	T	55/48.3
C191	4030016790	S.CER ECJ0EB1C103K	T	70/40.9
C192	4030017540	S.CER ECJ0EC1HR75B	T	57.7/43
C193	4030017460	S.CER ECJ0EB1E102K	T	70/39.9
C194	4030017530	S.CER ECJ0EC1H0R5B	T	60/44.4
C195	4030016930	S.CER ECJ0EB1A104K	B	39/30
C196	4030017730	S.CER ECJ0EB1E471K	B	38.1/33.2
C197	4030016930	S.CER ECJ0EB1A104K	B	38.1/32.2
C198	4030017730	S.CER ECJ0EB1E471K	B	31.3/38.3
C199	4030016930	S.CER ECJ0EB1A104K	B	31.3/39.2
C200	4030016930	S.CER ECJ0EB1A104K	B	31.3/34
C201	4030017730	S.CER ECJ0EB1E471K	B	31.3/33.1
C202	4030017460	S.CER ECJ0EB1E102K	T	112.1/38.7
C203	4030017460	S.CER ECJ0EB1E102K	B	100.9/47
C205	4030018900	S.CER ECJ0EB0J474K	T	78.4/18.4
C206	4030016930	S.CER ECJ0EB1A104K	T	78.5/16.7
C207	4030017730	S.CER ECJ0EB1E471K	T	61/45.7
C208	4030017460	S.CER ECJ0EB1E102K	T	60/45.7
C209	4030017460	S.CER ECJ0EB1E102K	B	65/52.7
C210	4030017590	S.CER ECJ0EC1H070C	B	57.6/50.3
C211	4030017620	S.CER ECJ0EC1H100C	B	60/51.4
C212	4030017460	S.CER ECJ0EB1E102K	B	63.8/50.8
C214	4030017460	S.CER ECJ0EB1E102K	B	66.8/41.3
C215	4030017390	S.CER ECJ0EC1H180J	B	38.5/47.6
C216	4030017660	S.CER ECJ0EC1H330J	B	43.1/47.6
C217	4030017730	S.CER ECJ0EB1E471K	B	25/32.7

[MAIN-A UNIT] (MDC compatible)

REF NO.	PARTS NO.	DESCRIPTION	M.	H/V LOCATION
C218	4030016930	S.CER ECJ0EB1A104K	B	25/31.7
C219	4030017650	S.CER ECJ0EC1H270J	B	23/36.3
C220	4030017600	S.CER ECJ0EC1H080C	B	23/38
C221	4030016930	S.CER ECJ0EB1A104K	B	5.6/23.2
C222	4030017030	S.CER ECJ0EB1A273K	B	128.6/45.3
C223	4030016930	S.CER ECJ0EB1A104K	B	126.3/48.2
C224	4030017640	S.CER ECJ0EC1H150J	T	124.2/40.1
C225	4030016790	S.CER ECJ0EB1C103K	T	124.2/37.4
C226	4030017580	S.CER ECJ0EC1H060C	T	124.2/41.1
C227	4030017460	S.CER ECJ0EB1E102K	B	57.6/53.5
C228	4030017460	S.CER ECJ0EB1E102K	B	56.4/53.1
C229	4030017620	S.CER ECJ0EC1H100C	B	52.1/53.1
C230	4030017460	S.CER ECJ0EB1E102K	B	63.5/62.3
C231	4030017360	S.CER ECJ0EC1H030B	B	66.3/52.2
C232	4030017460	S.CER ECJ0EB1E102K	B	68.6/49.5
C235	4030017460	S.CER ECJ0EB1E102K	B	44.4/50.7
C236	4030017390	S.CER ECJ0EC1H180J	B	47.8/48.1
C237	4030017620	S.CER ECJ0EC1H100C	B	47.4/49.4
C240	4030017460	S.CER ECJ0EB1E102K	B	18.9/34.4
C241	4030017570	S.CER ECJ0EC1H040B [B]	B	17/37.7
	4030017360	S.CER ECJ0EC1H030B [F]		
	4030017360	S.CER ECJ0EC1H030B [D]		
	4030017570	S.CER ECJ0EC1H040B [G]		
	4030017360	S.CER ECJ0EC1H030B [J]		
	4030017570	S.CER ECJ0EC1H040B [H]		
	4030017570	S.CER ECJ0EC1H040B [I]		
C242	4030017460	S.CER ECJ0EB1E102K	B	15/34.4
C243	4030017460	S.CER ECJ0EB1E102K	B	18.9/33.5
C244	4030017460	S.CER ECJ0EB1E102K	B	15.7/31.7
C245	4550006780	S.TAN TEESVB2 0J 476M8R	B	5.6/18.7
C246	4030016930	S.CER ECJ0EB1A104K	B	105.1/52.2
C247	4030016930	S.CER ECJ0EB1A104K	B	107/52.9
C248	4030016930	S.CER ECJ0EB1A104K	B	108.1/52
C249	4030018900	S.CER ECJ0EB0J474K	B	121.8/47.4
C250	4030017630	S.CER ECJ0EC1H120J	T	120.4/40.1
C251	4030017400	S.CER ECJ0EC1H220J	B	61.9/64.2
C252	4030017420	S.CER ECJ0EC1H470J	B	62.6/71.1
C253	4030017730	S.CER ECJ0EB1E471K	B	61.6/71.1
C254	4030017420	S.CER ECJ0EC1H470J	B	63.9/69.5
C256	4030017460	S.CER ECJ0EB1E102K	B	59.7/65.5
C257	4030017460	S.CER ECJ0EB1E102K	B	63.4/67.4
C258	4030017460	S.CER ECJ0EB1E102K	T	13.9/32.5
C259	4030017460	S.CER ECJ0EB1E102K	T	10/35
C260	4030017590	S.CER ECJ0EC1H070C	B	14.2/36.3
C261	4030017460	S.CER ECJ0EB1E102K	B	9.5/33.9
C262	4030017460	S.CER ECJ0EB1E102K	B	13.7/37.7
C263	4030017490	S.CER C1608 JB 1A 105K-T	T	14.1/33.7
C264	4030017350	S.CER ECJ0EC1H020B	B	8.4/38.6
C265	4030017420	S.CER ECJ0EC1H470J [F]	B	8.6/36.3
	4030017420	S.CER ECJ0EC1H470J [D]		
	4030017420	S.CER ECJ0EC1H470J [J]		
C266	4030017460	S.CER ECJ0EB1E102K [F]	B	9.5/36.3
	4030017460	S.CER ECJ0EB1E102K [D]		
	4030017460	S.CER ECJ0EB1E102K [J]		
C267	4030017460	S.CER ECJ0EB1E102K	B	63.9/70.5
C268	4030017640	S.CER ECJ0EC1H150J	B	68.2/69.1
C269	4030017390	S.CER ECJ0EC1H180J [B]	B	69.7/69.1
	4030017650	S.CER ECJ0EC1H270J [F]		
	4030017650	S.CER ECJ0EC1H270J [D]		
	4030017390	S.CER ECJ0EC1H180J [G]		
	4030017650	S.CER ECJ0EC1H270J [J]		
	4030017390	S.CER ECJ0EC1H180J [H]		
	4030017390	S.CER ECJ0EC1H180J [I]		
C270	4030017390	S.CER ECJ0EC1H180J	B	71.2/69
C271	4030017400	S.CER ECJ0EC1H220J [B]	T	74.3/71.7
	4030017390	S.CER ECJ0EC1H180J [F]		
	4030017390	S.CER ECJ0EC1H180J [D]		
	4030017400	S.CER ECJ0EC1H220J [G]		
	4030017390	S.CER ECJ0EC1H180J [J]		
	4030017400	S.CER ECJ0EC1H220J [H]		
	4030017400	S.CER ECJ0EC1H220J [I]		
C272	4030016930	S.CER ECJ0EB1A104K	T	7.9/39.5
C273	4030016930	S.CER ECJ0EB1A104K	T	9.5/39.5
C274	4030017460	S.CER ECJ0EB1E102K	T	7.4/41.2
C275	4030016930	S.CER ECJ0EB1A104K	T	15/41
C276	4030017620	S.CER ECJ0EC1H100C	B	10.5/41
C277	4030017460	S.CER ECJ0EB1E102K	T	14/41
C278	4030017340	S.CER ECJ0EC1H010B	B	8.9/43.6
C279	4030017640	S.CER ECJ0EC1H150J	B	6.9/44.2
C280	4030017550	S.CER ECJ0EC1H1R5B	B	9.4/46.1
C281	4030017420	S.CER ECJ0EC1H470J	T	97.9/34.2
C282	4030017420	S.CER ECJ0EC1H470J	T	102.1/40
C283	4030017420	S.CER ECJ0EC1H470J	B	97.4/44.6
C284	4030017420	S.CER ECJ0EC1H470J	T	94.8/35.5
C285	4030017420	S.CER ECJ0EC1H470J	B	94.2/44.4
C286	4030017420	S.CER ECJ0EC1H470J	T	92.1/43.3
C287	4030017420	S.CER ECJ0EC1H470J	T	92.1/41.6
C288	4030017460	S.CER ECJ0EB1E102K	B	4.8/46.5
C289	4030017640	S.CER ECJ0EC1H150J [B]	B	6.6/34.2
	4030017640	S.CER ECJ0EC1H150J [G]		
	4030017640	S.CER ECJ0EC1H150J [H]		
	4030017640	S.CER ECJ0EC1H150J [I]		
C290	4030017400	S.CER ECJ0EC1H220J	T	74.3/73.6
C291	4030017730	S.CER ECJ0EB1E471K	T	69.3/76.1
C292	4550000560	S.TAN TEESVA 1V 334M8R	T	67.6/74.4
C294	4030017420	S.CER ECJ0EC1H470J	T	70.4/76.1
C295	4030017420	S.CER ECJ0EC1H470J	T	56.7/67.3
C296	4510008530	S.ELE EEE1HA2R2SR	T	59.6/80
C297	4030017460	S.CER ECJ0EB1E102K	T	56.7/68.3
C299	4030017640	S.CER ECJ0EC1H150J	B	6.9/47.9
C301	4030017580	S.CER ECJ0EC1H060C	B	13.2/49.5
C302	4030017460	S.CER ECJ0EB1E102K	B	4.4/44.4
C303	4030016930	S.CER ECJ0EB1A104K	B	129.6/32
C304	4030017420	S.CER ECJ0EC1H470J	B	90/43.4

M.=Mounted side (T: Mounted on the Top side, B: Mounted on the Bottom side)
S.=Surface mount

[MAIN-A UNIT] (MDC compatible)

REF NO.	PARTS NO.	DESCRIPTION		M.	H/V LOCATION
C305	4030011140	S.CER GRM31M2C2H120JV01L (GRM42-6 CH)		T	27.6/78.7
C306	4030011120	S.CER GRM31M2C2H100JV01L (GRM42-6 CH)		T	27.6/76.1
C307	4030011120	S.CER GRM31M2C2H100JV01L (GRM42-6 CH)		T	27.7/71.8
C308	4030011070	S.CER GRM31M2C2H5R0CY21L (GRM42-6 CH)	[B]	T	27.7/69.2
	4030011140	S.CER GRM31M2C2H120JV01L (GRM42-6 CH)	[F]		
	4030011140	S.CER GRM31M2C2H120JV01L (GRM42-6 CH)	[D]		
	4030011070	S.CER GRM31M2C2H5R0CY21L (GRM42-6 CH)	[G]		
	4030011140	S.CER GRM31M2C2H120JV01L (GRM42-6 CH)	[J]		
	4030011070	S.CER GRM31M2C2H5R0CY21L (GRM42-6 CH)	[H]		
	4030011070	S.CER GRM31M2C2H5R0CY21L (GRM42-6 CH)	[I]		
C309	4030017460	S.CER ECJ0EB1E102K		T	71.5/76.1
C310	4030017420	S.CER ECJ0EC1H470J		T	43/76.1
C311	4030017460	S.CER ECJ0EB1E102K		T	44.1/76.1
C312	4030017730	S.CER ECJ0EB1E471K		T	45.3/76.1
C313	4510008680	S.ELE EEE1EA220SP		T	51.7/77.7
C314	4030017730	S.CER ECJ0EB1E471K		B	40.2/68.3
C315	4030017460	S.CER ECJ0EB1E102K		T	55.7/73.6
C316	4030016790	S.CER ECJ0EB1C103K		T	54.1/72.6
C317	4030011600	S.CER C1608 JB 1E 104K-T		T	54.1/67
C318	4030017460	S.CER ECJ0EB1E102K	[B]	T	35.1/63.3
	4030017460	S.CER ECJ0EB1E102K	[G]		
	4030017460	S.CER ECJ0EB1E102K	[H]		
	4030017460	S.CER ECJ0EB1E102K	[I]		
C319	4030017460	S.CER ECJ0EB1E102K	[B]	T	47.3/67.4
	4030017460	S.CER ECJ0EB1E102K	[G]		
	4030017460	S.CER ECJ0EB1E102K	[H]		
	4030017460	S.CER ECJ0EB1E102K	[I]		
C320	4030017580	S.CER ECJ0EC1H060C		B	15/52.7
C321	4030017460	S.CER ECJ0EB1E102K		B	14.9/49.5
C322	4030017600	S.CER ECJ0EC1H080C		B	19.3/52
C323	4030017570	S.CER ECJ0EC1H040B		B	20/49.6
C324	4030017420	S.CER ECJ0EC1H470J		B	90/41.8
C325	4030017460	S.CER ECJ0EB1E102K		T	72.5/64.9
C326	4030017420	S.CER ECJ0EC1H470J		B	46.2/64.3
C327	4030017460	S.CER ECJ0EB1E102K		B	84.2/79
C328	4030017460	S.CER ECJ0EB1E102K		B	83.2/79
C329	4030017460	S.CER ECJ0EB1E102K		B	82.1/79
C330	4030017460	S.CER ECJ0EB1E102K		B	81/79
C331	4030017460	S.CER ECJ0EB1E102K		B	80/79
C332	4030016930	S.CER ECJ0EB1A104K		T	51.9/71.9
C334	4030017460	S.CER ECJ0EB1E102K		T	49.5/68.6
C335	4030017460	S.CER ECJ0EB1E102K		T	53.8/63.2
C336	4030017580	S.CER ECJ0EC1H060C		B	20.8/52
C337	4030017390	S.CER ECJ0EC1H180J		B	25.1/51.2
C338	4510008600	S.ELE EEE1CA4R7NR		T	79.1/69.1
C339	4030017460	S.CER ECJ0EB1E102K		T	79.1/62.1
C340	4030017460	S.CER ECJ0EB1E102K		T	37.5/20.8
C341	4030016790	S.CER ECJ0EB1C103K		T	41.9/19.4
C342	4030017200	S.CER GRM31BR32J102KY01L (GHM1030 R)		T	25.3/62.5
C343	4030011270	S.CER GRM31M2C2H200JV01L (GRM42-6 CH)		T	22.1/63.9
C345	4030011170	S.CER GRM31M2C2H180JV01L (GRM42-6 CH)		T	17.3/57.4
C346	4030011170	S.CER GRM31M2C2H180JV01L (GRM42-6 CH)		T	30.2/62.8
C347	4030017520	S.CER ECJ0EC1H0R3B		B	25.4/63
C348	4030017460	S.CER ECJ0EB1E102K		B	31.5/63.4
C349	4030016930	S.CER ECJ0EB1A104K		T	100.5/63.5
C350	4550005980	S.TAN TEESVA 1A 475M8R		T	101.6/62
C351	4030016930	S.CER ECJ0EB1A104K		T	110.6/67.4
C352	4030017460	S.CER ECJ0EB1E102K		B	124.6/59.6
C353	4550005980	S.TAN TEESVA 1A 475M8R		B	124.5/61.3
C354	4550006250	S.TAN TEESVA 1A 106M8R		B	112.9/61.7
C355	4030017420	S.CER ECJ0EC1H470J		B	112.6/60.1
C356	4030011270	S.CER GRM31M2C2H200JV01L (GRM42-6 CH)		T	14.7/62.9
C357	4030011270	S.CER GRM31M2C2H200JV01L (GRM42-6 CH)		T	10.4/62.9
C358	4030007030	S.CER C1608 CH 1H 150J-T		B	10.6/56.4
C359	4030011340	S.CER C1608 CH 1H 471J-T		B	9.4/56.4
C360	4030017460	S.CER ECJ0EB1E102K		B	4/53
C361	4030017460	S.CER ECJ0EB1E102K		T	103.9/53.5
C362	4030017460	S.CER ECJ0EB1E102K		T	108.2/24.5
C363	4510008540	S.ELE EEE1CA100SR		T	139.1/31.9
C365	4550007650	S.TAN F931V105MAABMA		B	106.7/65
C366	4550007650	S.TAN F931V105MAABMA		B	104.2/65
C367	4550007650	S.TAN F931V105MAABMA		B	101.6/65
C368	4550007650	S.TAN F931V105MAABMA		B	99.5/64.6
C369	4030011270	S.CER GRM31M2C2H200JV01L (GRM42-6 CH)		T	15.8/78.9
C370	4030011270	S.CER GRM31M2C2H200JV01L (GRM42-6 CH)		T	15.8/83.1
C371	4030017460	S.CER ECJ0EB1E102K		B	4.1/81.6
C372	4030006850	S.CER C1608 JB 1H 471K-T		B	8.3/77.1
C373	4030016930	S.CER ECJ0EB1A104K		B	130.9/51.7
C374	4030016930	S.CER ECJ0EB1A104K		B	133/51.3
C375	4030016930	S.CER ECJ0EB1A104K		B	132.4/54.6
C377	4030017460	S.CER ECJ0EB1E102K		T	105.9/51.9
C378	4030017460	S.CER ECJ0EB1E102K		T	108.2/78
C379	4030016930	S.CER ECJ0EB1A104K		B	108.4/80.3
C380	4030017460	S.CER ECJ0EB1E102K		T	119.9/83.2
C381	4030016790	S.CER ECJ0EB1C103K		B	135.9/70.5
C383	4030017460	S.CER ECJ0EB1E102K		B	135.9/71.5
C384	4510008870	S.ELE EEE1AA471UP		T	129.9/64.9

[MAIN-A UNIT] (MDC compatible)

REF NO.	PARTS NO.	DESCRIPTION		M.	H/V LOCATION
C386	4030016930	S.CER ECJ0EB1A104K		B	138.8/53.7
C387	4030017720	S.CER ECJ0EB1H331K		B	135.4/51.3
C388	4030018860	S.CER ECJ0EB0J105K		B	138.6/52.2
C389	4030016930	S.CER ECJ0EB1A104K		B	139.1/49.4
C390	4030016930	S.CER ECJ0EB1A104K		B	137.8/55.4
C391	4030016930	S.CER ECJ0EB1A104K		T	101.8/82.3
C392	4030017460	S.CER ECJ0EB1E102K		B	131/74.6
C393	4030017460	S.CER ECJ0EB1E102K		B	99/79
C394	4030017420	S.CER ECJ0EC1H470J		B	115.4/68
C395	4030017460	S.CER ECJ0EB1E102K		B	128.2/76.5
C397	4030017460	S.CER ECJ0EB1E102K		B	99.8/86.3
C398	4030017420	S.CER ECJ0EC1H470J		B	100.8/86.3
C399	4030018860	S.CER ECJ0EB0J105K		B	136.3/37.1
C400	4030016930	S.CER ECJ0EB1A104K		B	139.7/35.3
C411	4510008780	S.ELE EEE1EA471P		T	117.2/63.6
C412	4510008780	S.ELE EEE1EA471P		T	132.7/54.3
C413	4030018900	S.CER ECJ0EB0J474K		B	135.1/46.8
C414	4510008540	S.ELE EEE1CA100SR		T	118.7/50.5
C415	4030016930	S.CER ECJ0EB1A104K		B	103/23.8
C416	4030016930	S.CER ECJ0EB1A104K		B	120.3/51.6
C417	4030016790	S.CER ECJ0EB1C103K		B	115.6/52.8
C418	4030017460	S.CER ECJ0EB1E102K		T	109.6/54.5
C419	4030016790	S.CER ECJ0EB1C103K		T	42.9/39.2
C420	4030017420	S.CER ECJ0EC1H470J		T	41/37.4
C421	4030016930	S.CER ECJ0EB1A104K		B	36/24.7
C422	4030016790	S.CER ECJ0EB1C103K		T	43.1/31.9
C423	4030017420	S.CER ECJ0EC1H470J		T	39.9/35.3
C424	4030016930	S.CER ECJ0EB1A104K		T	38.9/32.2
C425	4030017460	S.CER ECJ0EB1E102K		B	134.8/66.1
C426	4030018860	S.CER ECJ0EB0J105K		B	110/12.1
C427	4030017460	S.CER ECJ0EB1E102K		B	109.1/10.4
C430	4030017570	S.CER ECJ0EC1H040B		T	78.2/44.8
C431	4030017590	S.CER ECJ0EC1H070C		T	23/21.9
C432	4030016930	S.CER ECJ0EB1A104K		T	22.4/10.5
C433	4030016930	S.CER ECJ0EB1A104K		B	23/7.3
C434	4030017650	S.CER ECJ0EC1H270J		B	28.3/5.6
C435	4030017040	S.CER ECJ0EB1A333K		B	29.2/7.3
C436	4030016930	S.CER ECJ0EB1A104K		B	21.2/5.6
C437	4030016930	S.CER ECJ0EB1A104K		B	27.6/8.7
C438	4030016930	S.CER ECJ0EB1A104K		B	31.6/5.7
C440	4030016930	S.CER ECJ0EB1A104K		B	22.1/8.9
C441	4030017610	S.CER ECJ0EC1H090C		B	25.9/39.5
C451	4030018860	S.CER ECJ0EB0J105K		B	93.8/6.5
C452	4030019120	S.CER GRM188B31E105KA75D		B	129.7/64.1
J1	6510026770	S.CON AXK540147YG		T	124.5/9.7
J2	6510026770	S.CON AXK540147YG		T	101.5/9.7
J3	6510021301	S.CON 52365-1071		T	90.3/62.6
J5	6510023092	S.CON 20FLT-SM2-TB(LF)(SN)(M)		T	108.3/81.8
J7	6450000140	CON HSJ0807-01-010			
J10	6510023092	S.CON 20FLT-SM2-TB(LF)(SN)(M)		T	71/7
W1	7120000470	JUM ERDS2T0			
W2	8900016250	CAB OPC-1701 <CMI>T/H!			
EP1	6910015600	S.BEA ACZ1005Y-241 (240)		B	39.8/8.1
EP2	6910015370	S.BEA ACZ1005Y-102-T		B	50.1/12.4
EP3	6910015370	S.BEA ACZ1005Y-102-T		T	82.6/37.1
EP4	6910010280	BEA HF70BB9.5X10.4X4.9			
EP5	6910010280	BEA HF70BB9.5X10.4X4.9			
EP6	6910011560	BEA HF70BB4.5X5X1.6			
EP8	(Optional)	UNI EX-2887 [D] UT-126H	[G]		
	(Optional)	UNI EX-2887 [D] UT-126H	[J]		
	(Optional)	UNI EX-2887 [D] UT-126H	[H]		
	(Optional)	UNI EX-2887 [D] UT-126H	[I]		

M.=Mounted side (T: Mounted on the Top side, B: Mounted on the Bottom side)
S.=Surface mount

[FRONT UNIT]

REF NO.	PARTS NO.	DESCRIPTION		M.	H/V LOCATION
IC501	1130009121	S.IC	S1D15206F00A200	B	33.1/19.5
IC502	1110005771	S.IC	S-80942CNMC-G9CT2G	B	61.4/9.7
IC503	1140010771	S.IC	HD64F3687FPV(EMPTY)	B	62.1/25.2
IC504	1130007111	S.IC	TC7W04FU(TE12L,F)	B	73.9/26.3
IC505	1110005310	S.IC	AN6123MS	B	10/8.4
IC506	1110005350	S.IC	NJM2870F05-TE1-#FZZB	B	84.9/9.9
IC507	1130006221	S.IC	TC4W53FU(TE12L,F)	B	6.5/19
IC508	1130008561	S.IC	TC75S51F(TE85L,F)	B	74/11.3
Q501	1590001050	S.TRA	DTC114TUA T106	B	15.1/32.9
Q502	1590001050	S.TRA	DTC114TUA T106	B	18/32.9
Q503	1590001330	S.TRA	DTA114EUA T106	B	77/24.7
Q504	1530002851	S.TRA	2SC4116-BL(TE85R,F)	B	91.5/22.4
Q505	1590001050	S.TRA	DTC114TUA T106	B	92.5/18.8
Q506	1590000680	S.TRA	DTC114EUA T106	B	77/27.4
Q507	1590001050	S.TRA	DTC114TUA T106	B	51.4/30.2
D501	1750000370	S.DIO	DA221 TL	T	3.5/27.1
D502	1750000370	S.DIO	DA221 TL	T	3.5/25
D503	1750000370	S.DIO	DA221 TL	T	3.5/22.9
D504	1790001261	S.DIO	MA2S077G0L	B	50.9/23.1
D505	1790001251	S.DIO	MA2S1110GL	B	3.3/23.3
D506	1790001251	S.DIO	MA2S1110GL	B	82.1/21.7
D507	1790001251	S.DIO	MA2S1110GL	B	79.7/25.8
D508	1790000951	S.ZEN	MAZ8056GML	T	4.8/19.7
D509	1790000951	S.ZEN	MAZ8056GML	T	8.6/19.7
D510	1790000951	S.ZEN	MAZ8056GML	T	10.4/19.7
X501	6050011720	S.XTA	CR-764 SMD-49TB 19.6608 MHz <KDS>	B	49.6/18.9
L501	6200003640	S.COI	MLF1608E 100K-T	B	12/19.1
R501	7030003810	S.RES	ERJ3GEYJ 125 V (1.2M)	B	46/28.8
R502	7030003810	S.RES	ERJ3GEYJ 125 V (1.2M)	B	46.6/23.8
R503	7310005510	S.TRI	TMC3ADCS5X (470K)	B	45.5/26.3
R504	7030005120	S.RES	ERJ2GEJ 102 X (1K)	B	8/29.3
R505	7030005120	S.RES	ERJ2GEJ 102 X (1K)	B	10/29.3
R506	7030005120	S.RES	ERJ2GEJ 102 X (1K)	B	12/29.3
R507	7030005010	S.RES	ERJ2GEJ 681 X (680)	T	14.3/37.2
R508	7030005120	S.RES	ERJ2GEJ 102 X (1K)	T	14.3/36.3
R509	7510001730	S.THE	ERTJOEP 473J	B	59.9/17.1
R510	7030005120	S.RES	ERJ2GEJ 102 X (1K)	B	61.1/17.1
R511	7030005530	S.RES	ERJ2GEJ 100 X (10)	B	57.1/19.4
R512	7030008010	S.RES	ERJ2GEJ 123 X (12K)	B	52/22.7
R513	7030005050	S.RES	ERJ2GEJ 103 X (10K)	B	63.8/10.2
R514	7030005160	S.RES	ERJ2GEJ 105 X (1M)	B	56.1/20.7
R515	7030008010	S.RES	ERJ2GEJ 123 X (12K)	B	52.3/23.9
R516	7030008010	S.RES	ERJ2GEJ 123 X (12K)	B	49.5/23.9
R517	7410001140	S.ARR	EXB28V104JX	B	66.5/10.8
R518	7410001140	S.ARR	EXB28V104JX	B	67.5/19.2
R519	7030005090	S.RES	ERJ2GEJ 104 X (100K)	B	51.5/26.9
R520	7030005090	S.RES	ERJ2GEJ 104 X (100K)	B	71.6/26.8
R522	7030005090	S.RES	ERJ2GEJ 104 X (100K)	T	3.3/17.2
R523	7030004980	S.RES	ERJ2GEJ 101 X (100)	B	13.2/10.9
R524	7030005090	S.RES	ERJ2GEJ 104 X (100K)	B	71.6/28.4
R525	7030005240	S.RES	ERJ2GEJ 473 X (47K)	B	80.2/27
R526	7030007300	S.RES	ERJ2GEJ 332 X (3.3K)	B	79/24.4
R528	7030005090	S.RES	ERJ2GEJ 104 X (100K)	B	71.7/24.1
R529	7030005090	S.RES	ERJ2GEJ 104 X (100K)	B	82.1/19.6
R530	7030005160	S.RES	ERJ2GEJ 105 X (1M)	B	5.4/10
R531	7030009280	S.RES	ERJ2GEJ 391 X	B	92/20.6
R532	7030005120	S.RES	ERJ2GEJ 102 X (1K)	B	91.4/24.2
R533	7030007290	S.RES	ERJ2GEJ 222 X (2.2K)	B	91.4/25.2
R534	7030009140	S.RES	ERJ2GEJ 272 X (2.7K)	B	90.6/20.2
R535	7030005090	S.RES	ERJ2GEJ 104 X (100K)	B	82.4/31.4
R536	7030005220	S.RES	ERJ2GEJ 223 X (22K)	B	77.8/22.9
R537	7030005090	S.RES	ERJ2GEJ 104 X (100K)	T	7.2/19.2
R538	7030005090	S.RES	ERJ2GEJ 104 X (100K)	T	6.2/19.2
R539	7030010040	S.RES	ERJ2GEJ-JPW	B	76/15.9
R540	7030009290	S.RES	ERJ2GEJ 562 X (5.6K)	B	4.3/10.9
R541	7030007290	S.RES	ERJ2GEJ 222 X (2.2K)	B	3.3/16.6
R542	7030009160	S.RES	ERJ2GEJ 181 X (180)	B	89.8/24.2
R543	7030009160	S.RES	ERJ2GEJ 181 X (180)	B	89.8/25.2
R545	7030005240	S.RES	ERJ2GEJ 473 X (47K)	T	11.8/19.2
R546	7210003050	VAR	EVU-F2KFK3 B14 (10KB)		
R547	7030005120	S.RES	ERJ2GEJ 102 X (1K)	T	11.8/17.2
R548	7030005120	S.RES	ERJ2GEJ 102 X (1K)	T	6.8/17.2
R549	7030005120	S.RES	ERJ2GEJ 102 X (1K)	T	9.3/17.2
R550	7030005240	S.RES	ERJ2GEJ 473 X (47K)	B	10.9/19.4
R551	7030007300	S.RES	ERJ2GEJ 332 X (3.3K)	B	11/5.8
R552	7030009280	S.RES	ERJ2GEJ 391 X	B	10.1/5.8
R553	7030007290	S.RES	ERJ2GEJ 222 X (2.2K)	B	75.2/8.7
R554	7030007290	S.RES	ERJ2GEJ 222 X (2.2K) [A]	B	71.4/12.4
	7030007290	S.RES	ERJ2GEJ 222 X (2.2K) [E]		
	7030007290	S.RES	ERJ2GEJ 222 X (2.2K) [C]		
	7030009140	S.RES	ERJ2GEJ 272 X (2.7K) [B]		
	7030009140	S.RES	ERJ2GEJ 272 X (2.7K) [F]		
	7030009140	S.RES	ERJ2GEJ 272 X (2.7K) [D]		
	7030009140	S.RES	ERJ2GEJ 272 X (2.7K) [G]		
	7030009140	S.RES	ERJ2GEJ 272 X (2.7K) [J]		
	7030009140	S.RES	ERJ2GEJ 272 X (2.7K) [H]		
	7030009140	S.RES	ERJ2GEJ 272 X (2.7K) [I]		

[FRONT UNIT]

REF NO.	PARTS NO.	DESCRIPTION		M.	H/V LOCATION
R555	7030005220	S.RES	ERJ2GEJ 223 X (22K) [A]	B	71.4/11.5
	7030005220	S.RES	ERJ2GEJ 223 X (22K) [E]		
	7030005220	S.RES	ERJ2GEJ 223 X (22K) [C]		
	7030008290	S.RES	ERJ2GEJ 183 X (18K) [B]		
	7030008290	S.RES	ERJ2GEJ 183 X (18K) [F]		
	7030008290	S.RES	ERJ2GEJ 183 X (18K) [D]		
	7030008290	S.RES	ERJ2GEJ 183 X (18K) [G]		
	7030008290	S.RES	ERJ2GEJ 183 X (18K) [J]		
	7030008290	S.RES	ERJ2GEJ 183 X (18K) [H]		
	7030008290	S.RES	ERJ2GEJ 183 X (18K) [I]		
R556	7030005050	S.RES	ERJ2GEJ 103 X (10K)	B	73.2/8.7
R557	7030005050	S.RES	ERJ2GEJ 103 X (10K)	B	71.8/10.2
R558	7030005060	S.RES	ERJ2GEJ 333 X (33K) [A]	B	74/13.5
	7030005060	S.RES	ERJ2GEJ 333 X (33K) [E]		
	7030005060	S.RES	ERJ2GEJ 333 X (33K) [C]		
	7030008010	S.RES	ERJ2GEJ 123 X (12K) [B]		
	7030008010	S.RES	ERJ2GEJ 123 X (12K) [F]		
	7030008010	S.RES	ERJ2GEJ 123 X (12K) [D]		
	7030008010	S.RES	ERJ2GEJ 123 X (12K) [G]		
	7030008010	S.RES	ERJ2GEJ 123 X (12K) [J]		
	7030008010	S.RES	ERJ2GEJ 123 X (12K) [H]		
	7030008010	S.RES	ERJ2GEJ 123 X (12K) [I]		
R559	7030005090	S.RES	ERJ2GEJ 104 X (100K)	B	11/20.8
R560	7030005090	S.RES	ERJ2GEJ 104 X (100K)	T	6.2/20.8
C501	4030016930	S.CER	ECJ0EB1A104K	B	41.8/30.2
C502	4030016930	S.CER	ECJ0EB1A104K	B	40.9/30.2
C503	4030016930	S.CER	ECJ0EB1A104K	B	42.7/30.2
C504	4030016930	S.CER	ECJ0EB1A104K	B	43.6/30.2
C505	4030016930	S.CER	ECJ0EB1A104K	B	44.5/30.2
C506	4030017490	S.CER	C1608 JB 1A 105K-T	B	44.7/23.2
C507	4030017460	S.CER	ECJ0EB1E102K	B	46.1/22.7
C508	4030017490	S.CER	C1608 JB 1A 105K-T	B	43.4/23.2
C509	4030017730	S.CER	ECJ0EB1E471K	B	13.1/33.3
C510	4030017730	S.CER	ECJ0EB1E471K	B	18.6/30.5
C511	4030016790	S.CER	ECJ0EB1C103K	B	58.3/17.1
C512	4030016930	S.CER	ECJ0EB1A104K	B	62/17.1
C513	4030017030	S.CER	ECJ0EB1A273K	B	59.1/10.2
C514	4030016930	S.CER	ECJ0EB1A104K	B	58.3/18.3
C515	4030017630	S.CER	ECJ0EC1H120J	B	57.1/17.8
C516	4030017580	S.CER	ECJ0EC1H060C	B	48.9/22.7
C517	4030016790	S.CER	ECJ0EB1C103K	B	52.9/22.7
C518	4030017640	S.CER	ECJ0EC1H150J	B	49.8/22.7
C519	4030016930	S.CER	ECJ0EB1A104K	B	53.8/22.7
C520	4030017420	S.CER	ECJ0EC1H470J	T	12.5/36.3
C521	4030017460	S.CER	ECJ0EB1E102K	B	78.8/27.5
C522	4550006480	S.TAN	TEESVA 1C 475M8R	B	87.7/9.8
C523	4550006250	S.TAN	TEESVA 1A 106M8R	B	12.8/7.6
C524	4550006250	S.TAN	TEESVA 1A 106M8R	B	7.2/7.6
C525	4030017330	S.CER	ECJ0EF1C104Z	B	85.7/7.7
C526	4030016790	S.CER	ECJ0EB1C103K	B	84.1/7.7
C527	4030017420	S.CER	ECJ0EC1H470J	T	5.9/17.2
C528	4030017460	S.CER	ECJ0EB1E102K	T	8.4/17.2
C529	4550006250	S.TAN	TEESVA 1A 106M8R	B	82.1/9.8
C530	4030016930	S.CER	ECJ0EB1A104K	B	84.1/12.1
C531	4030017460	S.CER	ECJ0EB1E102K	B	79/22.5
C533	4030017460	S.CER	ECJ0EB1E102K	B	80/22.5
C534	4030017420	S.CER	ECJ0EC1H470J	B	76.2/22.9
C535	4030016930	S.CER	ECJ0EB1A104K	B	5.4/9.1
C536	4030016930	S.CER	ECJ0EB1A104K	B	3.3/18.2
C537	4030017460	S.CER	ECJ0EB1E102K	B	14/25
C538	4030017330	S.CER	ECJ0EF1C104Z	B	6/10.9
C539	4030017420	S.CER	ECJ0EC1H470J	T	10.9/17.2
C540	4030017460	S.CER	ECJ0EB1E102K	B	10.9/17.8
C541	4030017420	S.CER	ECJ0EC1H470J	B	8.5/10.9
C543	4030017420	S.CER	ECJ0EC1H470J	B	77.6/16.7
C544	4030017420	S.CER	ECJ0EC1H470J	B	79.8/16.7
C545	4030017420	S.CER	ECJ0EC1H470J	B	77.6/15.8
C546	4030017420	S.CER	ECJ0EC1H470J	B	74/15.3
C547	4030017460	S.CER	ECJ0EB1E102K	B	74/16.2
C548	4030017490	S.CER	C1608 JB 1A 105K-T	B	9.7/19.3
C549	4030016930	S.CER	ECJ0EB1A104K	B	3.7/21.2
C550	4030018900	S.CER	ECJ0EB0J474K	B	70.1/11.9
C551	4030016930	S.CER	ECJ0EB1A104K	B	70.9/10.2
C552	4030017460	S.CER	ECJ0EB1E102K	B	75.2/6.9
C553	4030017460	S.CER	ECJ0EB1E102K	B	71.4/13.3
C554	4030016790	S.CER	ECJ0EB1C103K	B	74.2/8.7
C555	4030017460	S.CER	ECJ0EB1E102K [A]	B	74/14.4
	4030017460	S.CER	ECJ0EB1E102K [E]		
	4030017460	S.CER	ECJ0EB1E102K [C]		
	4030018920	S.CER	ECJ0EB1H392K [B]		
	4030018920	S.CER	ECJ0EB1H392K [F]		
	4030018920	S.CER	ECJ0EB1H392K [D]		
	4030018920	S.CER	ECJ0EB1H392K [G]		
	4030018920	S.CER	ECJ0EB1H392K [J]		
	4030018920	S.CER	ECJ0EB1H392K [H]		
	4030018920	S.CER	ECJ0EB1H392K [I]		
C556	4550006480	S.TAN	TEESVA 1C 475M8R	B	76.9/10.2
J501	6510022022	S.CON	14FLT-SM2-TB(LF)(SN)(M)	B	88/28.5
J502	6510023092	S.CON	20FLT-SM2-TB(LF)(SN)(M)	B	75.5/19.5
J503	6450002210	CON	3017-8821 <KIN>		
DS501	5030003020	LCD	L6-0226TVM-3		
DS502	5040002670	S.LED	CL-165HR/YG	T	18.2/35.9
DS503	5040002310	S.LED	SML-311YTT86	T	32.8/6.5
DS504	5040002310	S.LED	SML-311YTT86	T	46.1/6.3
DS505	5040002310	S.LED	SML-311YTT86	T	59.8/6.3
DS506	5040002310	S.LED	SML-311YTT86	T	92.3/24.5
DS507	5040002310	S.LED	SML-311YTT86	T	73.1/6.5
DS508	5040002310	S.LED	SML-311YTT86	T	31.7/26
DS509	5040002310	S.LED	SML-311YTT86	T	40.2/26

M.=Mounted side (T: Mounted on the Top side, B: Mounted on the Bottom side)
S.=Surface mount

[FRONT UNIT]

REF NO.	PARTS NO.	DESCRIPTION		M.	H/V LOCATION
DS510	5040002310	S.LED	SML-311YTT86	T	48.7/26
DS511	5040002310	S.LED	SML-311YTT86	T	74.2/26
DS512	5040002310	S.LED	SML-311YTT86	T	65.7/26
DS513	5040002310	S.LED	SML-311YTT86	T	57.2/26
SP501	2510001400	SPE	3050S-E6227 <PRI>		
W501	8900012711	CAB	OPC-1297A (P0.5,N20,L62) <TJM>		
W502	7120000470	JUM	ERDS2T0		
W503	7120000470	JUM	ERDS2T0		
EP502	8930072220	LCD	SRCN-2979-SP-N-W (SHJ)		

[CONNECT UNIT]

REF NO.	PARTS NO.	DESCRIPTION		M.	H/V LOCATION
C601	4030017420	S.CER	ECJ0EC1H470J	T	12.7/4.6
C602	4030017420	S.CER	ECJ0EC1H470J	T	15.4/4.6
C603	4030017420	S.CER	ECJ0EC1H470J	T	18.2/4.6
C604	4030017420	S.CER	ECJ0EC1H470J	T	19.6/4.6
C605	4030017420	S.CER	ECJ0EC1H470J	T	20.9/4.6
C606	4030017420	S.CER	ECJ0EC1H470J	T	25.1/4.6
C607	4030017420	S.CER	ECJ0EC1H470J	T	37.5/13.2
C608	4030017420	S.CER	ECJ0EC1H470J	T	16.8/4.6
C609	4030017420	S.CER	ECJ0EC1H470J	T	40.3/13.2
C610	4030017420	S.CER	ECJ0EC1H470J	T	41.7/4.6
J601	6510025240	S.CON	IMSA-9631S-20Y912	B	32.2/16.2
J602	6510023210	CON	CD6125SA1J0 <CVI>		
W601	8900012711	CAB	OPC-1297A (P0.5,N20,L62) <TJM>		

M.=Mounted side (T: Mounted on the Top side, B: Mounted on the Bottom side)
S.=Surface mount

BOARD LAYOUTS

• **MDC compatible**

The combination of this side and the bottom side shows the board layout in the same configuration as the actual P.C.Board.

• **CONNECT UNIT (TOP VIEW)**

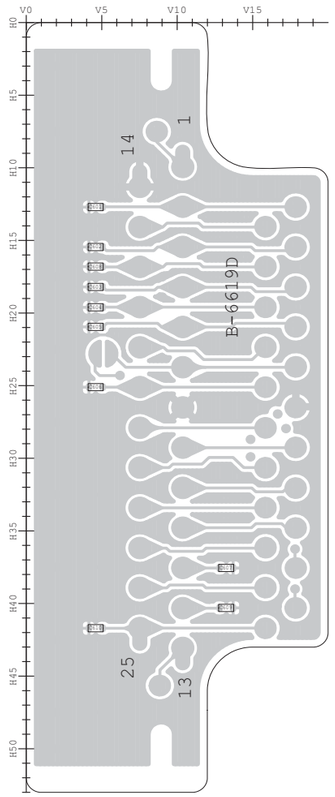

• **MAIN-A UNIT (TOP VIEW)**

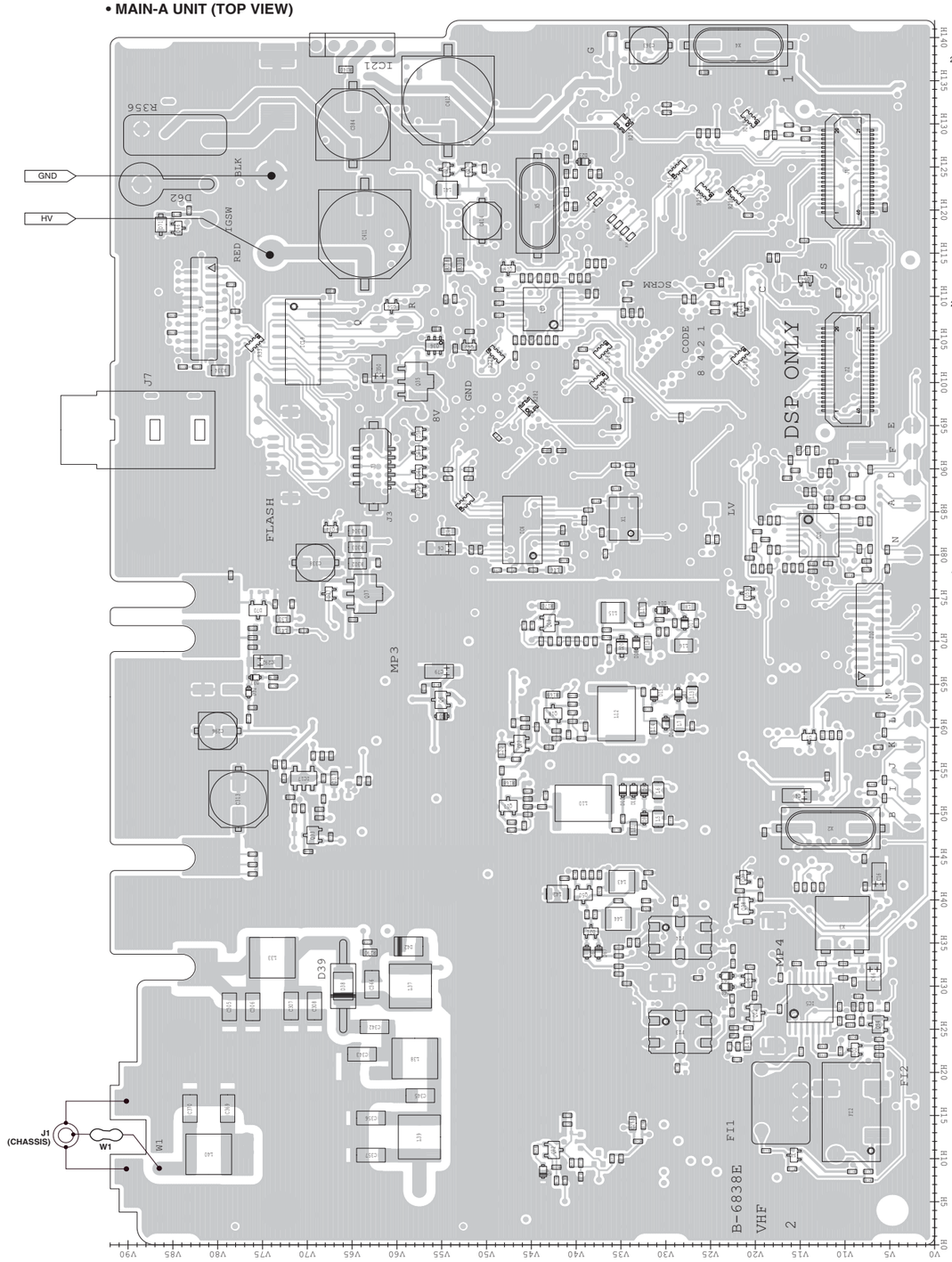

J1		
20	DASW	NC	21
	PFMF	CCK	
	EMPH	CSI	
	GND	CSO	
	OPT3	NC	
	OPT2	CIRQ	
	OPT1	CCS	
	SIGO	REM	
	BUSY	NC	
	NC	AFOUT	
	NC	DISC	
	NC	RMUT	
	NC	BEPO	
	MCIN	AFON	
	NC	MMUTI	
	MCOT	NC	
	PTTO	VCC	
	PTTI	+5V	
	GND	GND	
1	NC	NC	40

J2		
20	GND	GND	21
	GND	CCK	
	NC	CSI	
	GND	CSO	
	OPT3	NC	
	OPT2	CIRQ	
	OPT1	CCS	
	NC	NC	
	NC	DAFO	
	NC	NC	
	VREF	DISC	
	NC	NC	
	DMI	NC	
	NC	NC	
	DMO	NC	
	NC	NC	
	NC	8V	
	NC	+5V	
	GND	GND	
1	D_IF	D_IF	40

J10		
		VCC	20
19	VCC	NC	
	GND	8V	
	MFDA	FMDA	
	POSW	MICE	
	MCIN	MICE	
	AFO	NC	
	SP-	SP-	
	NC	SP+	
	SP+	GND	2
1	GND		

• **FRONT UNIT (TOP VIEW)**

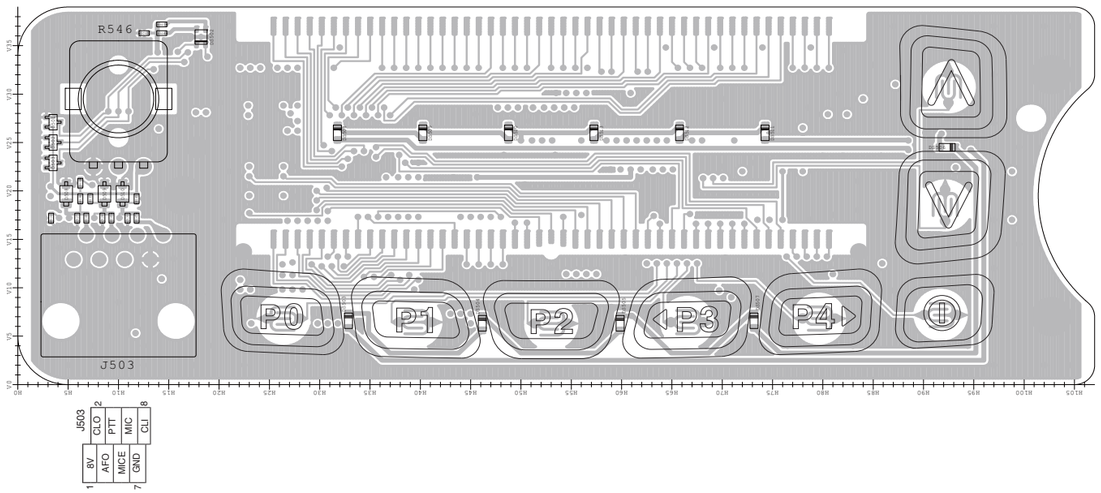

J503		
		CLO	2
	8V	PTT	
	AFO	MIC	
	MICE	CLI	8
7	GND		
1			

• MDC compatible

The combination of this side and the bottom side shows the board layout in the same configuration as the actual P.C.Board.

• MAIN-A UNIT (BOTTOM VIEW)

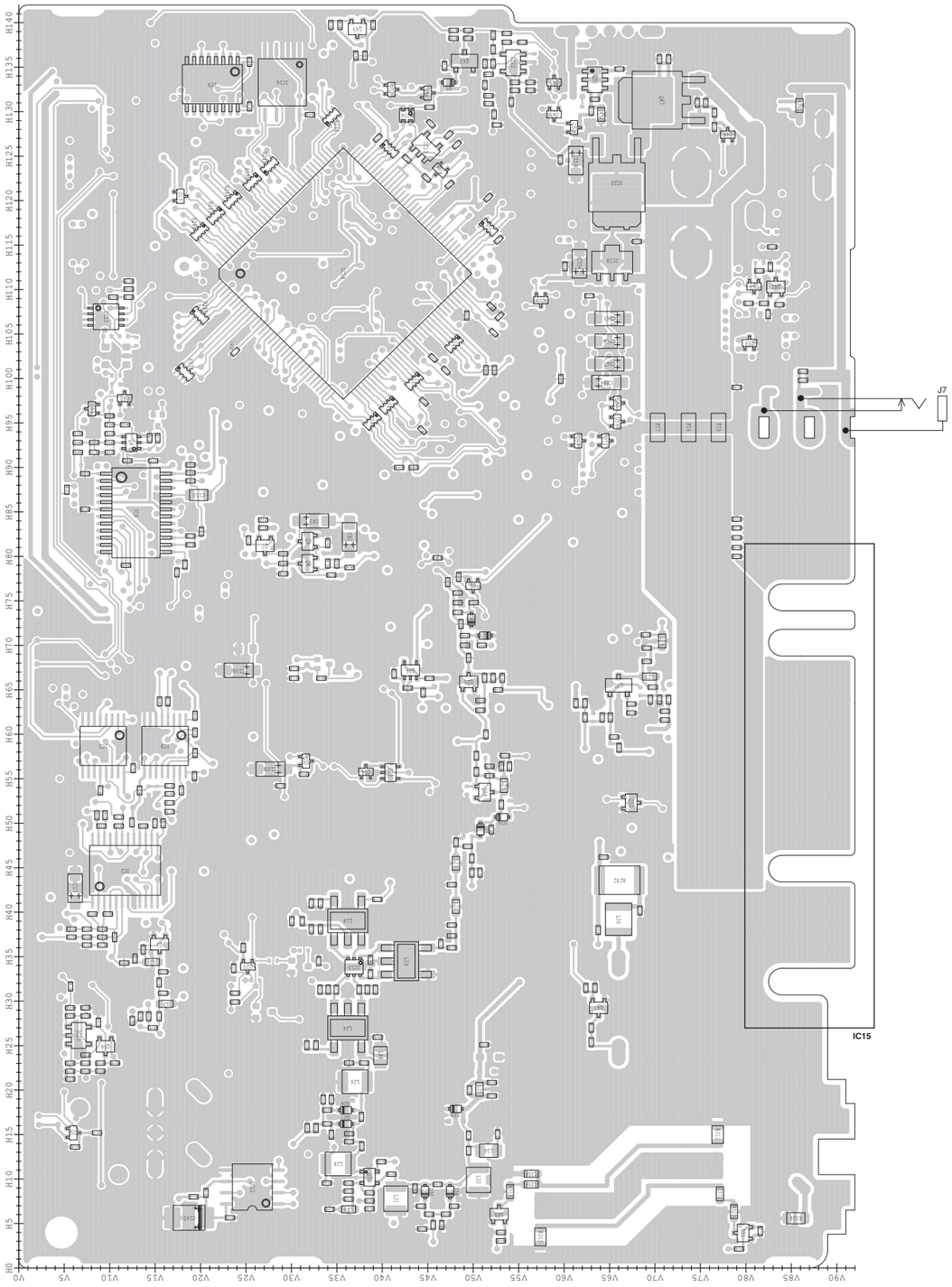

• CONNECT UNIT (BOTTOM VIEW)

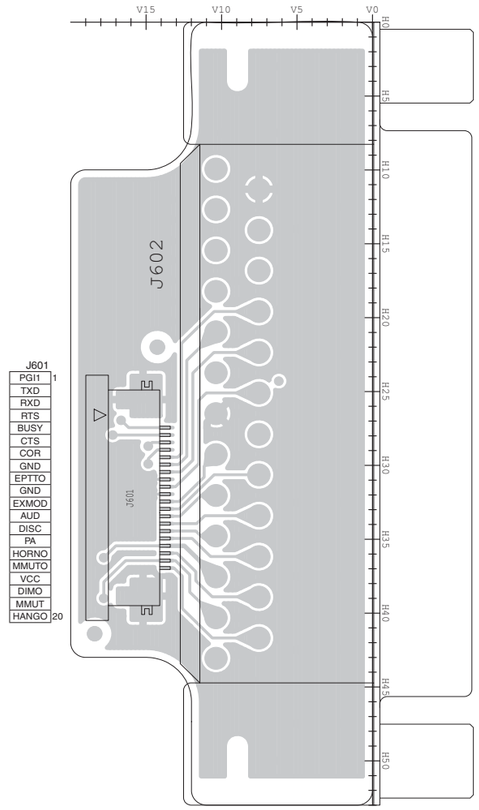

• FRONT UNIT (BOTTOM VIEW)

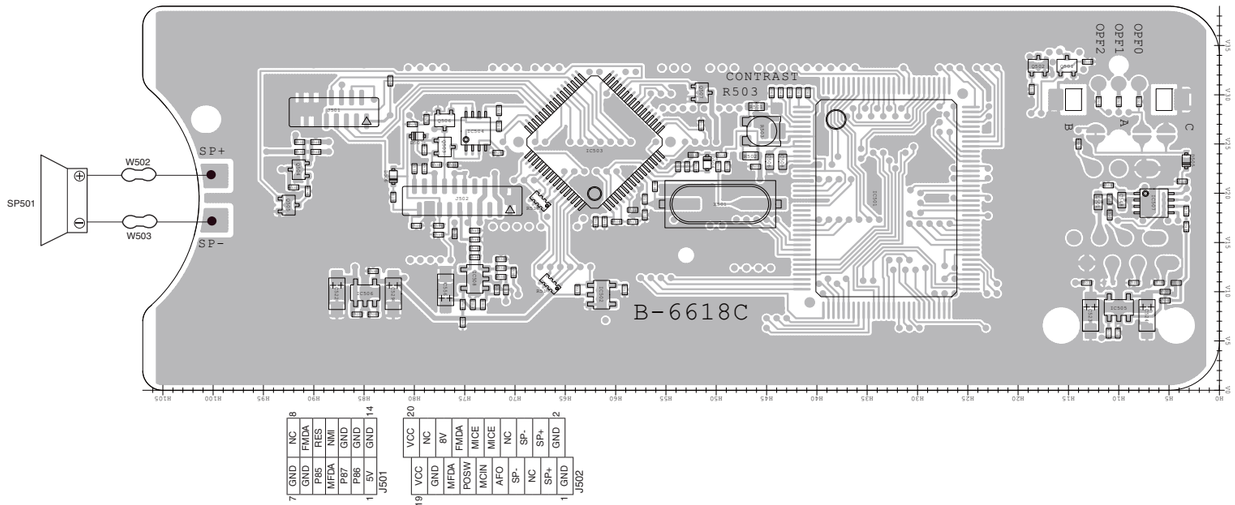

VOLTAGE DIAGRAM

FRONT UNIT

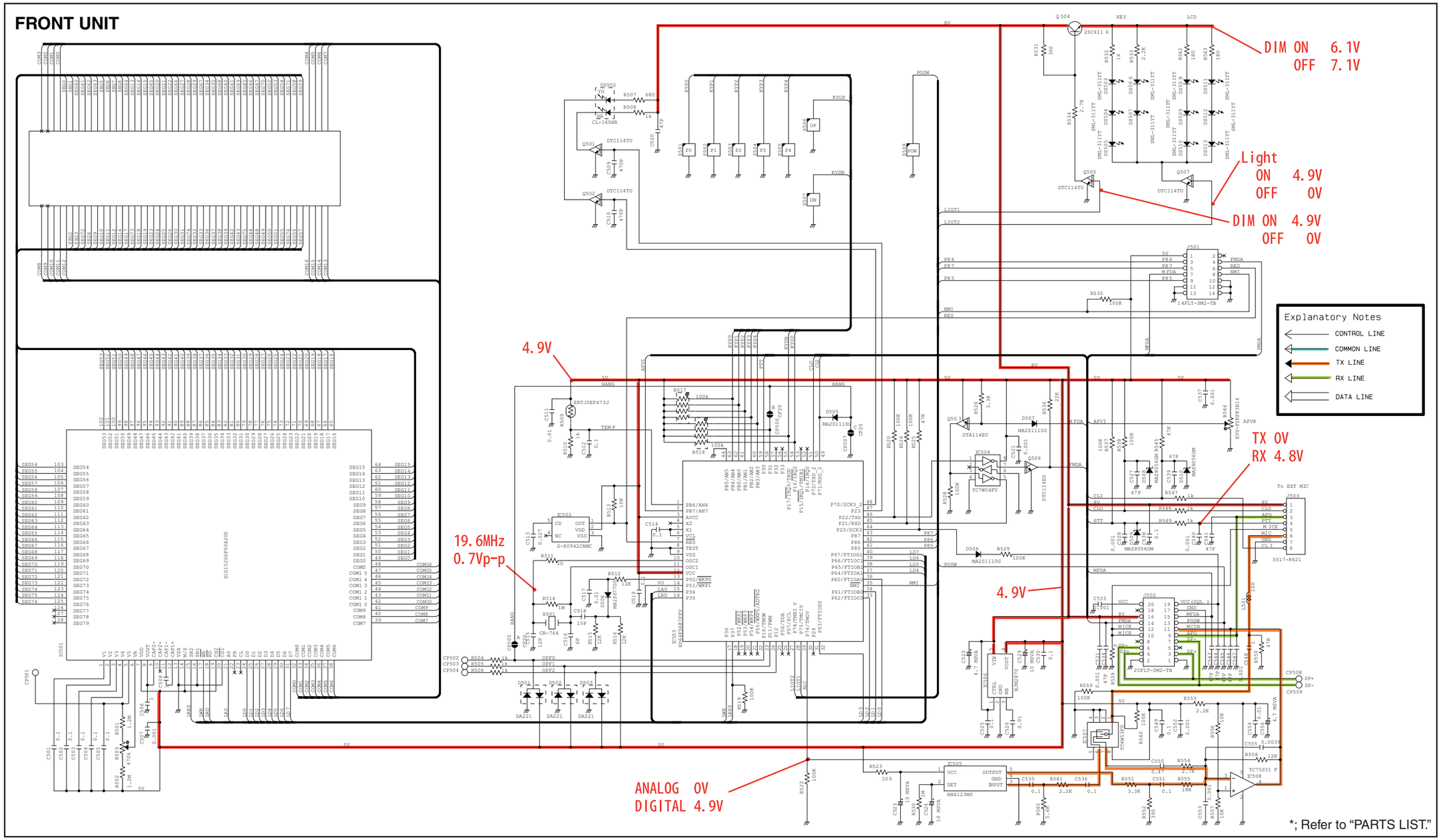

• MDC compatible

MAIN-A UNIT (1)

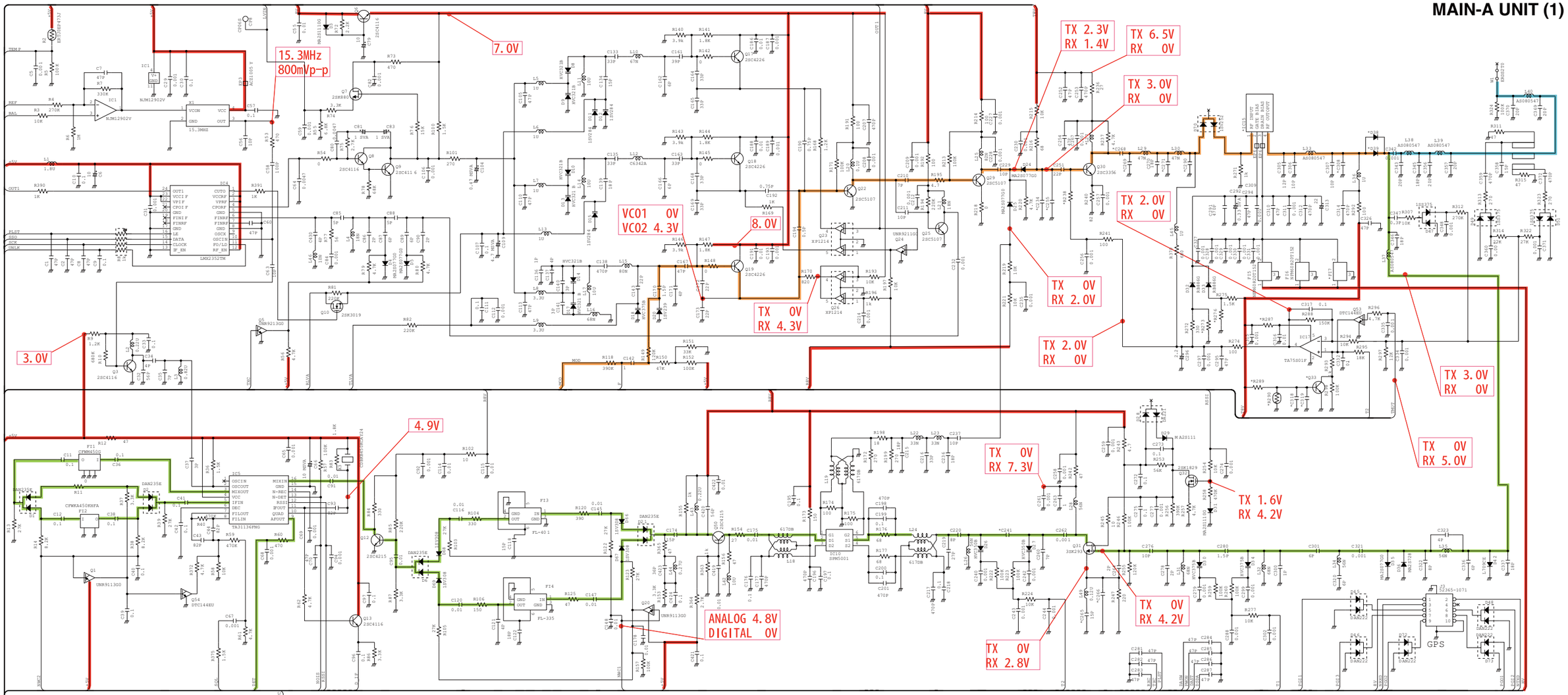

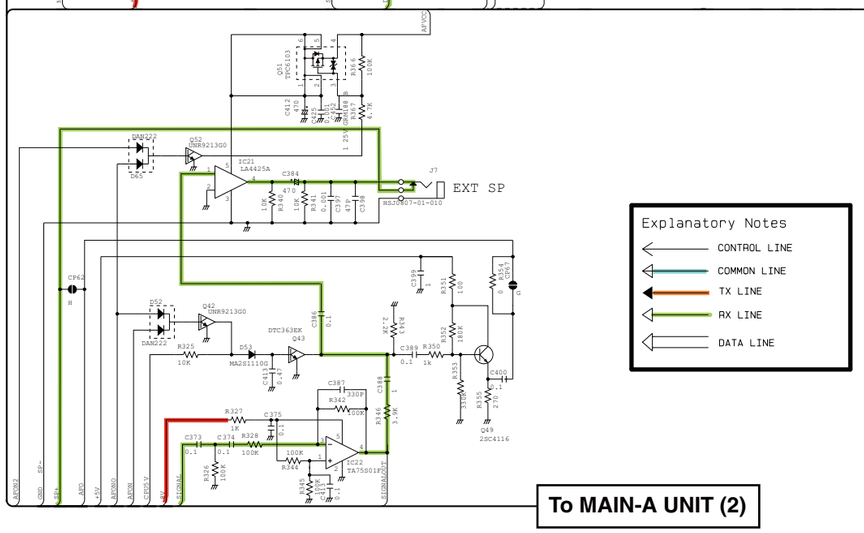

Explanatory Notes

- CONTROL LINE
- COMMON LINE
- TX LINE
- RX LINE
- DATA LINE

• **MDC compatible**

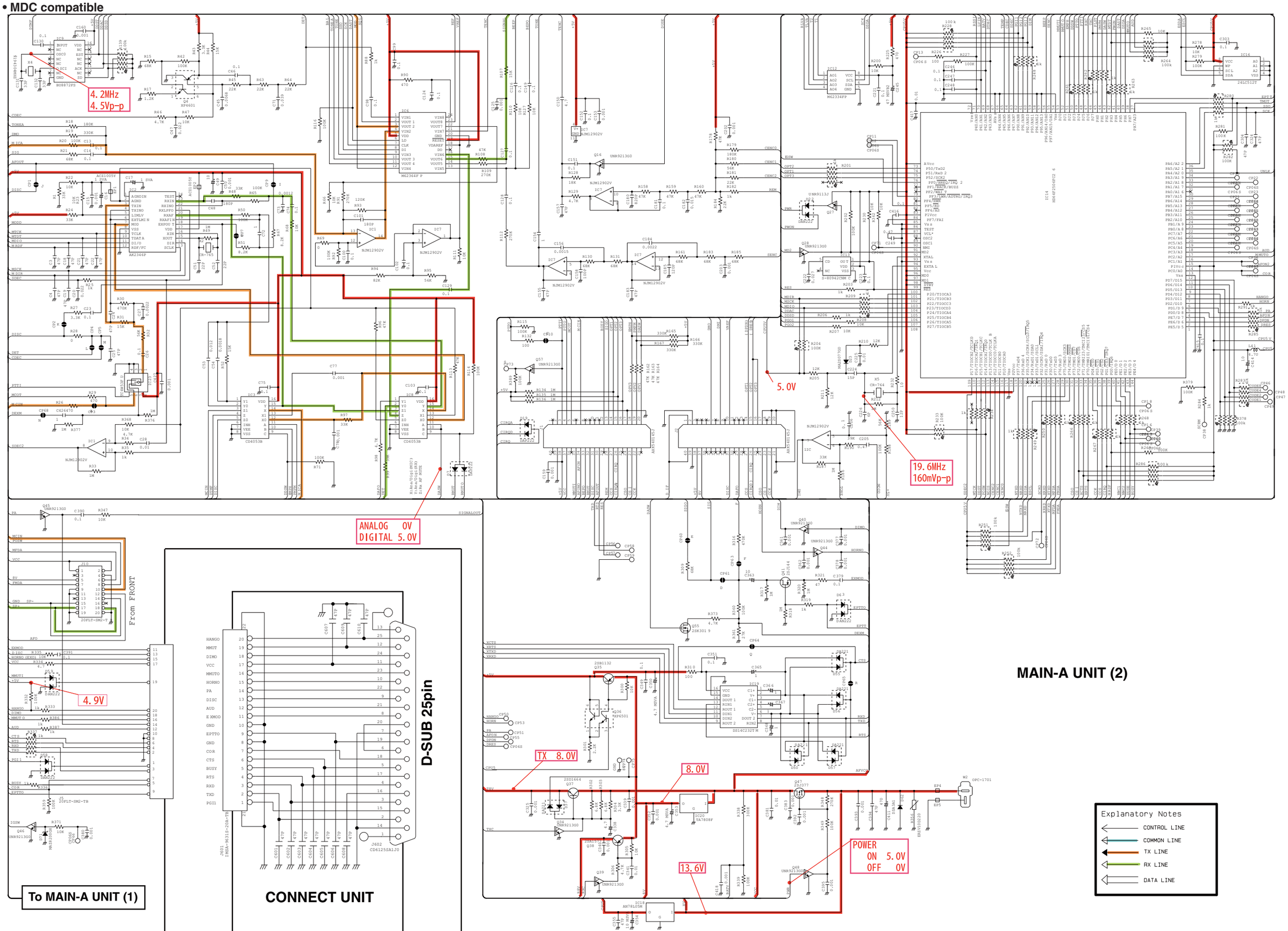

May. 2009

SERVICE MANUAL ADDENDUM

IC-F5061 IC-F5062 IC-F5063 IC-F5061D IC-F5062D

CONTENTS

REPLACEMENT PAGES 4-1, 4-2
PARTS LIST 1
BOARD LAYOUTS 14
VOLTAGE DIAGRAM 18

MODEL	VERSION	CHANNEL SPACING	TX POWER	MDC	UT-126H already installed
IC-F5061	USA-01	15.0/30.0 kHz	50 W	Not compatible	No
	USA-02			Compatible	
IC-F5062	EUR-01	12.5/25.0 kHz	25 W	Not compatible	
	EUR-02			Compatible	
IC-F5063	EXP-01	12.5/20/25.0 kHz		Not compatible	
	EXP-02			Compatible	
IC-F5061D	USA-01	6.25/15.0/30.0 kHz	50 W	Compatible	Yes
	USA-11				
	USA-12				
IC-F5062D	EUR-03	6.5/12.5/20/25 kHz	25W	Not compatible	

SECTION 4 OPTIONAL UNITS INSTALLATION

BEFORE INSTALLING OPTIONAL UNITS

Before installing optional units, the sponge supplied with the transceiver must be attached to the units. Remove the bottom protective paper, and attach the sponge to the specified position on the optional units as shown below.

NOTE: Attach the sponge by pressing it gently but ensure that it is attached to the unit securely.

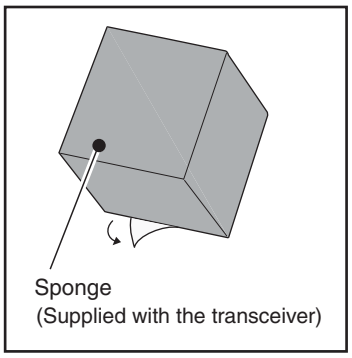

• UT-96R

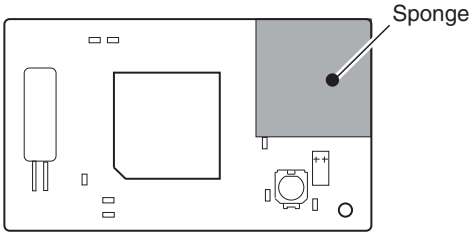

• UT-109R/UT-110R

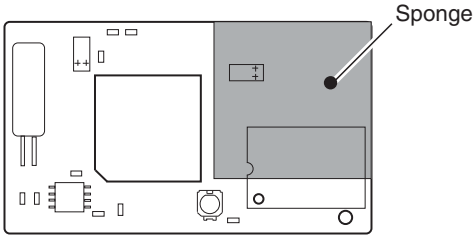

• UT-126H

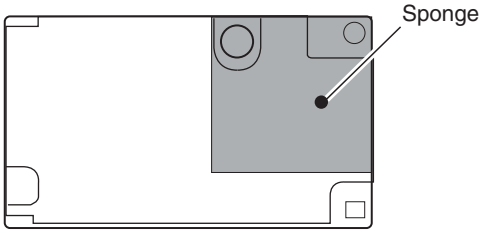

Optional units installation

① Turn the transceiver power OFF, then disconnect the DC power cable.
② Unscrew the 4 cover screws, then remove the bottom cover.
③ Remove the protective paper from the sponge on the bottom of the unit.
④ Install the UT-96R/UT-109R/UT-110R to J1 and the UT-126H to J2 as shown.
⑤ Replace the bottom cover and screws, then re-connect the DC power cable.

NOTE: When installing the unit
Be sure that the unit is inserted correctly.

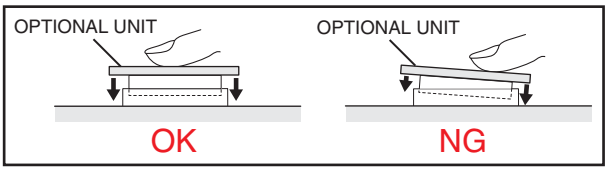

UT-96R/UT-109R/UT-110R must be installed to **J1**, and UT-126H must be installed to **J2**.

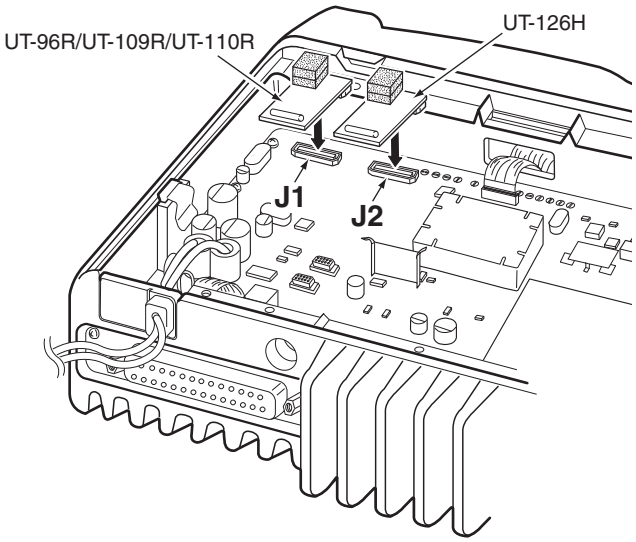

Required modification for the UT-109R and UT-110R

• Cut the pattern on the PCB at the A (MIC) and B (AF OUT) as shown below.

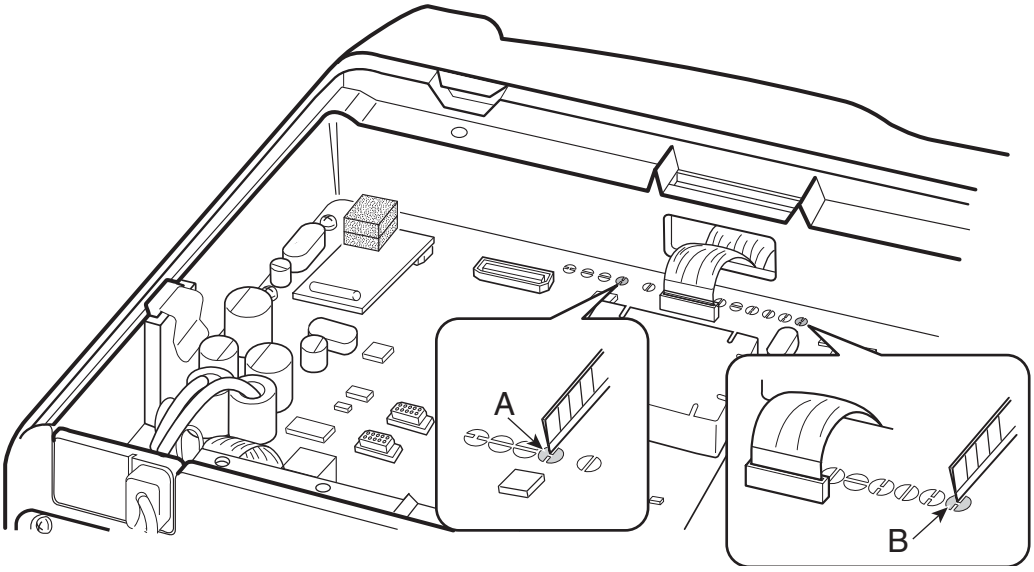

NOTE: When uninstalling the UT109R or UT-110R
Be sure to re-solder the cut points as below when you remove the unit. Otherwise no TX modulation or AF output is available.

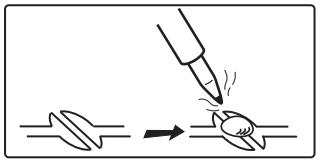

PARTS LIST

[VERSION LIST]

MODEL	VERSION	SYMBOL
IC-F5061	USA-01	[A]
	USA-02	[B]
IC-F5062	EUR-01	[C]
	EUR-02	[D]
IC-F5063	EXP-01	[E]
	EXP-02	[F]
IC-F5061D	USA-01	[G]
	USA-11	[H]
	USA-12	[I]
IC-F5062D	EUR-03	[J]

[MAIN UNIT] (Other than "MDC compatible")

REF NO.	PARTS NO.	DESCRIPTION			M.	H/V LOCATION
IC1	1110005340	S.IC	NJM12902V-TE1-#ZZZB		T	82.3/12.9
IC2	1110006221	S.IC	AK2346P-E2/P		B	44.7/11.7
IC3	1140013200	S.IC	CD4053BPWR		B	58.7/9.3
IC4	1130010100	S.IC	LMX2352TMX/NOPB		T	82.9/46
IC5	1110003491	S.IC	TA31136FNG(D,EL)		T	28/13.9
IC6	1190001350	S.IC	M62364FP 600D		B	84.9/12.9
IC7	1110005340	S.IC	NJM12902V-TE1-#ZZZB		T	108.5/43.7
IC8	1140013200	S.IC	CD4053BPWR		B	58.7/16.1
IC9	1130012960	S.IC	BU8872FS-E2		B	133.1/21.3
IC10	1190002051	S.IC	SPM5001-TL-E		B	33.8/36.9
IC12	1190001340	S.IC	M62334FP 600C		B	9.1/25.7
IC13	1110005771	S.IC	S-80942CNMC-G9CT2G		B	126/44.8
IC14	1140014550	S.IC	HD64F2506RFC26DV(EMPTY)		B	111.8/35.7
IC15	1150002073	IC	RA60H1317M-125	[A]		
	1150002042	IC	RA30H1317M-121	[E]		
	1150002042	IC	RA30H1317M-121	[C]		
IC16	1140012950	S.IC	24LC512T-I/SM		B	133.3/29
IC17	1110002751	S.IC	TA75S01F(TE85R,F)		T	54.1/70.4
IC18	1180000970	S.IC	AN78L05M-(E1)		B	113/65.3
IC19	1120002510	S.IC	DS14C232TM S		T	104.7/70.5
IC20	1180001251	S.IC	TA7808F(TE16L,Q)		B	121.5/65.8
IC21	1110003091	IC	LA4425A-E			
IC22	1110002751	S.IC	TA75S01F(TE85R,F)		B	135.5/54.4
IC23	1130006221	S.IC	TC4W53FU(TE12L,F)		B	106.9/9.6
Q1	1590003231	S.TRA	UNR9113G0L		B	15.2/6
Q3	1530002851	S.TRA	2SC4116-BL(TE85R,F)		B	36.4/15.5
Q4	1590001650	S.TRA	XP4601(TX)		B	92.8/12.4
Q5	1590003291	S.TRA	UNR9213G0L		B	76.7/50
Q6	1530002851	S.TRA	2SC4116-BL(TE85R,F)		T	63.2/55.1
Q7	1560000541	S.FET	2SK880-Y(T5RICOM,F)		B	81.2/27.1
Q8	1530002851	S.TRA	2SC4116-BL(TE85R,F)		B	79.2/31.8
Q9	1530002851	S.TRA	2SC4116-BL(TE85R,F)		B	81.7/31.8
Q10	1560001360	S.FET	2SK3019 TL		B	57/31.6
Q12	1530002601	S.TRA	2SC4215-O(TE85R,F)		T	26.9/20
Q13	1530002851	S.TRA	2SC4116-BL(TE85R,F)		B	31.8/9.9
Q16	1590003291	S.TRA	UNR9213G0L		T	113.2/47.6
Q17	1530002920	S.TRA	2SC4226-T1 R25		T	50.9/47.6
Q18	1530002920	S.TRA	2SC4226-T1 R25		T	61.6/42.6
Q19	1530002920	S.TRA	2SC4226-T1 R25		T	72.1/43
Q20	1590003231	S.TRA	UNR9113G0L		B	33.9/25.2
Q22	1530003311	S.TRA	2SC5107-O(TE85R,F)		T	58.1/46.3
Q23	1590001400	S.TRA	XP1214(TX)		B	55.7/40.9
Q24	1590003281	S.TRA	UNR9211G0L		B	55.8/38.2
Q25	1530003311	S.TRA	2SC5107-O(TE85R,F)		B	65.9/49.5
Q26	1590001400	S.TRA	XP1214(TX)		B	67.2/43.1
Q27	1590003231	S.TRA	UNR9113G0L		T	124.7/52
Q28	1590003291	S.TRA	UNR9213G0L		B	123.4/46.3
Q29	1530003311	S.TRA	2SC5107-O(TE85R,F)		B	53.5/51.2
Q30	1530000372	S.TRA	2SC3356-T1B R (R24)		B	65.5/66
Q31	1580000731	S.FET	3SK293(TE85L,F)		B	10.2/38.6
Q32	1560000841	S.FET	2SK1829(TE85R,F)		T	11/42.5
Q33	1530002851	S.TRA	2SC4116-BL(TE85R,F)	[A] only	T	47.5/69.4
Q34	1590003291	S.TRA	UNR9213G0L		T	83/67.4
Q35	1520000460	S.TRA	2SB1132 T100 R		T	100.1/57.9
Q36	1590001190	S.TRA	XP6501-(TX).AB		T	104.3/55.8
Q37	1540000550	S.TRA	2SD1664 T100Q		T	75.5/63.6
Q38	1510000920	S.TRA	2SA1577 T106 Q		T	39.3/21.3
Q39	1590003291	S.TRA	UNR9213G0L		T	42.6/21.3
Q40	1590003291	S.TRA	UNR9213G0L		T	104.1/51.9
Q41	1590001451	S.FET	2SJ144-GR (TE85R,F)		B	110.3/83.3
Q42	1590003291	S.TRA	UNR9213G0L		B	132.1/45
Q43	1590000990	S.TRA	DTC363EK T146		B	135.7/49
Q44	1590003291	S.TRA	UNR9213G0L		T	108.5/21.6
Q45	1590003291	S.TRA	UNR9213G0L		B	133.3/58.9
Q46	1590003291	S.TRA	UNR9213G0L		T	117.9/84.4
Q47	1550000100	S.FET	2SJ377 (TE16L1,NQ)		B	131.3/71.5
Q48	1590003291	S.TRA	UNR9213G0L		B	124.9/77.7
Q49	1530002851	S.TRA	2SC4116-BL(TE85R,F)		B	139.3/37.2
Q50	1530002601	S.TRA	2SC4215-O(TE85R,F)		T	40.6/39.2
Q51	1590003321	S.FET	TPC6103(TE85L,F)		B	133.6/63.4
Q52	1590003291	S.TRA	UNR9213G0L		B	128.2/61.1
Q53	1590000430	S.TRA	DTC144EUA T106		B	52.3/67.4
Q54	1590000430	S.TRA	DTC144EUA T106		T	25.5/6.3
Q55	1560001360	S.FET	2SK3019 TL		T	75.5/20.9
Q57	1590003291	S.TRA	UNR9213G0L		T	112/14.4
D1	1750001070	S.DIO	DAN235ETL		T	10.4/15.7
D2	1750001070	S.DIO	DAN235ETL		T	22.6/8.9
D3	1790001251	S.DIO	MA2S1110GL		T	61.3/55
D4	1790001261	S.DIO	MA2S077G0L		B	72.9/49.8
D5	1790001261	S.DIO	MA2S077G0L		B	71.1/51.3
D6	1750001070	S.DIO	DAN235ETL		T	30.6/20.8
D7	1160000140	S.DIO	DAP222 TL		T	58.9/14
D8	1720000791	S.VAR	HVC321B1TRF-E		T	49.5/32.4
D9	1720000791	S.VAR	HVC321B1TRF-E		T	52.7/32.4
D10	1720000791	S.VAR	HVC321B1TRF-E		T	60.5/30
D11	1720000641	S.VAR	1SV284(TPH3,F)		T	52.7/33.6
D12	1720000641	S.VAR	1SV284(TPH3,F)		T	52.7/34.8
D13	1720000791	S.VAR	HVC321B1TRF-E		T	63.8/28.6
D14	1720000791	S.VAR	HVC321B1TRF-E		T	73.6/30.4
D15	1720000641	S.VAR	1SV284(TPH3,F)		T	63.8/31.3
D17	1720000791	S.VAR	HVC321B1TRF-E		T	72.1/27.9
D18	1750000721	S.VAR	HVC375BTRF-E		T	69.8/33.3
D19	1160000140	S.DIO	DAP222 TL		B	120.5/17.8
D20	1720000471	S.VAR	1SV239(TPH3,F)		T	69.4/34.9

M.=Mounted side (T: Mounted on the Top side, B: Mounted on the Bottom side)
S.=Surface mount

[MAIN UNIT] (Other than "MDC compatible")

REF NO.	PARTS NO.	DESCRIPTION	M.	H/V LOCATION
D21	1750001070	S.DIO DAN235ETL	T	36.3/38.3
D22	1750000520	S.DIO DAN222TL	T	124.7/54.5
D23	1790001261	S.DIO MA2S077G0L	T	125.6/39.2
D24	1790001261	S.DIO MA2S077G0L	B	50.7/53.2
D25	1790001261	S.DIO MA2S077G0L	B	49.3/50.8
D26	1750000711	S.VAR HVC350BTRF-E	B	17.7/36
D27	1750000711	S.VAR HVC350BTRF-E	B	16.2/36
D28	1750000370	S.DIO DA221 TL	T	10/37.5
D29	1790001251	S.DIO MA2S1110GL	T	12/39.5
D30	1750000721	S.VAR HVC375BTRF-E	B	8.6/44.7
D31	1790001251	S.DIO MA2S1110GL	T	8.5/43.7
D32	1750001080	S.DIO RB886G T2R	T	64.1/76.5
D33	1750001080	S.DIO RB886G T2R	T	65.8/75.8
D34	1750000721	S.VAR HVC375BTRF-E	B	8.6/47.4
D35	1790001261	S.DIO MA2S077G0L	B	17.9/48.1
D36	1790001241	S.DIO MA2S7280GL [E]	B	16.5/48.1
	1790001241	S.DIO MA2S7280GL [C]		
D37	1750000370	S.DIO DA221 TL	T	75.5/67.6
D38	1750000511	S.DIO UX9401F-STD/TR <INT> [E]	T	30/66
	1750000511	S.DIO UX9401F-STD/TR <INT> [C]		
D39	1710001061	DIO L407CDB [A] only		
D42	1750001360	S.DIO L709CER (9401)	T	34.6/58.7
D45	1750000520	S.DIO DAN222TL	T	91.8/57.5
D46	1750000520	S.DIO DAN222TL	T	89.6/57.5
D47	1790001211	S.DIO 1SS375-TL-E	B	29.2/63.8
D48	1750000520	S.DIO DAN222TL	B	93/61.5
D49	1790001211	S.DIO 1SS375-TL-E	B	6/52.8
D50	1750000370	S.DIO DA221 TL	B	97.2/65.8
D51	1790001211	S.DIO 1SS375-TL-E	B	3.9/79.7
D52	1750000520	S.DIO DAN222TL	B	132.5/41
D53	1790001251	S.DIO MA2S1110GL	B	133.3/47.3
D55	1750000370	S.DIO DA221 TL	B	108.8/57.4
D56	1750000370	S.DIO DA221 TL	T	108.8/60.6
D57	1750000370	S.DIO DA221 TL	B	95.1/65.8
D58	1750000520	S.DIO DAN222TL	T	94/57.5
D59	1750000520	S.DIO DAN222TL	B	104/80.4
D62	1790000700	DIO DSA3A1		
D63	1750000520	S.DIO DAN222TL	B	110.3/80.9
D65	1750000520	S.DIO DAN222TL	B	129.7/58.9
D66	1790001621	S.DIO 1SV308(TPL3,F)	T	33.9/38.8
D67	1790001621	S.DIO 1SV308(TPL3,F)	T	33.9/37.5
D68	1790001621	S.DIO 1SV308(TPL3,F)	T	29.9/23.2
D69	1790001621	S.DIO 1SV308(TPL3,F)	T	31.2/23.2
D70	1750000351	S.DIO 1SV252(TE85L,F)	T	73.6/75.5
D71	1730002411	S.ZEN MAZ8200GHL	T	118.3/86.3
D72	1750000520	S.DIO DAN222TL	T	87.4/57.5
D73	1750000520	S.DIO DAN222TL	B	93/64.5
FI1	2020001410	CER CFWLB450KGFA-B0 (CFWM450G)		
FI2	2020002470	S.CER CFWKA450KHFA001-R0	T	15.4/9.3
FI3	2030000500	S.MON DSF753SBF 46.35 MHz (FL-401)	T	24.7/28.4
FI4	2030000150	S.MON DSF753SB 46.350 MHz (FL-335)	T	35.6/28.4
FI5	2040001440	S.LC NFE31PT152Z1E9L (NFM60R20T152)	B	94.5/77
FI6	2040001440	S.LC NFE31PT152Z1E9L (NFM60R20T152)	B	94.5/73.7
FI7	2040001440	S.LC NFE31PT152Z1E9L (NFM60R20T152) [A] only	B	94.5/70.3
X1	6050012380	S.XTA CR-826 DSA535SD 15.3 MHz	T	84.2/34.7
X2	6050011730	S.XTA CR-765 SMD-49TA 3.6864 MHz <KDS>	T	48.3/11.6
X3	6070000300	S.DIS JTBM450CX24 <JJE>	T	37.1/10.3
X4	6050012320	S.XTA CR-818 SMD-49 4.194304 MHz <KDS>	T	139.1/21.9
X5	6050011720	S.XTA CR-764 SMD-49TB 19.6608 MHz <KDS>	T	120.5/44.3
L1	6200004660	S.COI MLF1608A 1R8K-T	T	82.7/54.3
L2	6200003540	S.COI MLF1608D R22K-T	B	34.4/14.7
L3	6200004480	S.COI MLF1608D R82K-T	B	29.7/16.2
L4	6200007911	S.COI ELJRF 18NJFB	B	75.9/48.3
L5	6200007120	S.COI ELJND 1R0J	T	49.4/30.8
L6	6200007120	S.COI ELJND 1R0J	T	52.7/30.8
L7	6200007120	S.COI ELJND 1R0J	T	60.5/28.4
L8	6200007170	S.COI MLF1608A 3R3K-T	T	74/27.5
L9	6200007170	S.COI MLF1608A 3R3K-T	T	69.8/32
L10	6200010600	S.COI C6342A-67NG-A	T	51.2/39.2
L11	6200003640	S.COI MLF1608E 100K-T	T	48.3/33.6
L12	6200009910	S.COI C6342A-88NG-A	T	61.6/35.5
L13	6200007120	S.COI ELJND 1R0J	T	63.8/27
L14	6200003640	S.COI MLF1608E 100K-T	T	60/31.4
L15	6200012450	S.COI 0.25-1.9-8TL 73N (COAT) <COMO>	T	73.3/35.9
L16	6200008090	S.COI LQW2BHN68NJ03L	T	69.5/28
L17	6200003640	S.COI MLF1608E 100K-T	T	73.7/32.6
L18	6130003000	S.COI #617DB-1714=P3	B	39/36.2
L19	6130003000	S.COI #617DB-1714=P3	B	34.5/42.6
L20	6200009181	S.COI ELJRE R10JFA	T	57.3/48.3
L21	6200007911	S.COI ELJRF 18NJFB	B	66.3/51.2
L22	6200005721	S.COI ELJRE 33NGFA	B	40.6/48.1
L23	6200005721	S.COI ELJRE 33NGFA	B	45.5/48.1
L24	6130003000	S.COI #617DB-1714=P3	B	27/36.2
L25	6200009151	S.COI ELJRE 82NJFA	B	54.2/53.4
L26	6200010720	S.COI C2520C-56NG-A	B	20.9/37
L27	6200009181	S.COI ELJRE R10JFA	B	66.5/69.4
L28	6200010720	S.COI C2520C-56NG-A	B	11.7/35.1
L29	6200009171	S.COI ELJRE 47NJFA	B	70.5/70.8
L30	6200009171	S.COI ELJRE 47NJFA	T	72.6/72.7
L31	6200010730	S.COI C2520C-68NG-A	B	7.8/41.5
L32	6200010730	S.COI C2520C-68NG-A	B	9.9/50.6

[MAIN UNIT] (Other than "MDC compatible")

REF NO.	PARTS NO.	DESCRIPTION	M.	H/V LOCATION
L33	6200010050	S.COI AS080547-47N	T	33.3/73.9
L34	6200007750	S.COI LQW2BHN56NJ03L	B	13.2/51.7
L35	6200006991	S.COI ELJRE 56NGFA	B	20.1/50.7
L36	6200010420	S.COI FHW1210HC 1R0JGT <JJE>	B	39.2/66
L37	6200010050	S.COI AS080547-47N	T	30/58.5
L38	6200010050	S.COI AS080547-47N	T	21.6/58
L39	6200010050	S.COI AS080547-47N	T	12.5/57.5
L40	6200010050	S.COI AS080547-47N	T	10.5/81
L41	6200002861	S.COI NLV25T-4R7J	T	122.3/54.4
L42	6200005011	S.COI NLV25T-100J	T	40.7/42.1
L43	6200010680	S.COI C2520C-R22G-A (0.22U)	T	42.1/34.9
L44	6200010740	S.COI C2520C-R27G-A	T	37.8/35.3
L45	6200003960	S.COI MLF1608A 1R0K-T	T	71.3/72.7
L46	6200005661	S.COI ELJRE 10NGFA	T	78.3/42.3
R1	7030005060	S.RES ERJ2GEJ 333 X (33K)	B	38.1/5.8
R2	7510001730	S.THE ERTJOEP 473J	T	90.4/35.6
R3	7030005050	S.RES ERJ2GEJ 103 X (10K)	T	79/11.9
R4	7030005700	S.RES ERJ2GEJ 274 X (270K)	B	88.5/18.9
R5	7030005090	S.RES ERJ2GEJ 104 X (100K)	T	90.4/34
R6	7030005160	S.RES ERJ2GEJ 105 X (1M)	T	84/19.4
R7	7030005230	S.RES ERJ2GEJ 334 X (330K)	T	84/17.5
R8	7410001130	S.ARR EXB28V102JX	T	86.1/52.4
R9	7030007570	S.RES ERJ2GEJ 122 X (1.2K)	B	34.3/11.6
R10	7030007060	S.RES ERJ2GEJ 684X (680K)	B	35.8/13.7
R11	7030010040	S.RES ERJ2GEJ-JPW	T	8.5/9.2
R12	7030004970	S.RES ERJ2GEJ 470 X (47)	T	31/17.2
R13	7030005600	S.RES ERJ2GEJ 273 X (27K)	T	8.8/15.9
R14	7030005210	S.RES ERJ2GEJ 822 X (8.2K)	T	7.5/7.4
R15	7030005070	S.RES ERJ2GEJ 683 X (68K)	B	93.3/14.4
R17	7030007570	S.RES ERJ2GEJ 122 X (1.2K)	B	93.3/15.3
R18	7030008300	S.RES ERJ2GEJ 184 X (180K)	B	79/11.8
R19	7030005230	S.RES ERJ2GEJ 334 X (330K)	T	89.3/9
R20	7030005090	S.RES ERJ2GEJ 104 X (100K)	T	85.6/8.3
R21	7030005070	S.RES ERJ2GEJ 683 X (68K)	T	86.6/8.3
R22	7030005050	S.RES ERJ2GEJ 103 X (10K)	B	38.1/7.5
R23	7030005050	S.RES ERJ2GEJ 103 X (10K)	B	38.1/9.2
R24	7030005060	S.RES ERJ2GEJ 333 X (33K)	B	37.2/10.5
R25	7030005120	S.RES ERJ2GEJ 102 X (1K)	B	100.9/51.4
R26	7030005000	S.RES ERJ2GEJ 471 X (470)	B	87.5/5.3
R27	7030007300	S.RES ERJ2GEJ 332 X (3.3K)	T	53.9/5.6
R28	7030010040	S.RES ERJ2GEJ-JPW	T	59.4/5.6
R29	7030005000	S.RES ERJ2GEJ 471 X (470)	T	116.4/14.5
R30	7030005170	S.RES ERJ2GEJ 474 X (470K)	B	37.2/9.2
R31	7030007340	S.RES ERJ2GEJ 153 X (15K)	B	36.3/9.2
R32	7030005720	S.RES ERJ2GEJ 563 X (56K)	B	37.2/7.5
R33	7030005160	S.RES ERJ2GEJ 105 X (1M)	T	80.7/8.4
R34	7030005040	S.RES ERJ2GEJ 472 X (4.7K)	T	80.7/7.2
R35	7030005120	S.RES ERJ2GEJ 102 X (1K)	T	77.6/9.5
R36	7030005030	S.RES ERJ2GEJ 152 X (1.5K)	B	27/14.7
R37	7030007300	S.RES ERJ2GEJ 332 X (3.3K)	B	15.2/8.6
R38	7030005210	S.RES ERJ2GEJ 822 X (8.2K)	T	22.9/6.2
R39	7030005600	S.RES ERJ2GEJ 273 X (27K)	T	24/9.1
R40	7030005170	S.RES ERJ2GEJ 474 X (470K)	T	25.9/10.6
R41	7030007290	S.RES ERJ2GEJ 222 X (2.2K)	T	27.6/6.2
R42	7030005090	S.RES ERJ2GEJ 104 X (100K)	B	94.8/11.7
R43	7030007300	S.RES ERJ2GEJ 332 X (3.3K)	B	94.8/10
R44	7030007340	S.RES ERJ2GEJ 153 X (15K)	B	90.7/11.9
R45	7030005220	S.RES ERJ2GEJ 223 X (22K)	B	92.8/10
R46	7030005040	S.RES ERJ2GEJ 472 X (4.7K)	T	92.1/14.1
R47	7030005050	S.RES ERJ2GEJ 103 X (10K)	T	92.1/13.1
R48	7030005060	S.RES ERJ2GEJ 333 X (33K)	B	50.9/8.6
R49	7030005160	S.RES ERJ2GEJ 105 X (1M)	B	49.7/13.7
R50	7030005090	S.RES ERJ2GEJ 104 X (100K)	B	49.7/11
R51	7030005210	S.RES ERJ2GEJ 822 X (8.2K)	T	52.4/7
R52	7030007340	S.RES ERJ2GEJ 153 X (15K)	T	59.1/12.5
R53	7030005000	S.RES ERJ2GEJ 471 X (470)	T	86.2/37.7
R54	7030010040	S.RES ERJ2GEJ-JPW	B	78.7/36.4
R55	7030005290	S.RES ERJ2GEJ 682 X (6.8K)	T	81.8/25.3
R56	7030005040	S.RES ERJ2GEJ 472 X (4.7K)	B	77.7/48.4
R57	7030005090	S.RES ERJ2GEJ 104 X (100K)	B	28.3/14.3
R58	7030005050	S.RES ERJ2GEJ 103 X (10K)	T	27.6/9
R59	7030005170	S.RES ERJ2GEJ 474 X (470K)	T	27.6/8.1
R60	7030005000	S.RES ERJ2GEJ 471 X (470)	T	30.9/10.2
R61	7030005040	S.RES ERJ2GEJ 472 X (4.7K)	T	28.8/8.5
R62	7030005040	S.RES ERJ2GEJ 472 X (4.7K)	B	32.2/11.9
R63	7030005220	S.RES ERJ2GEJ 223 X (22K)	B	92.8/8.3
R64	7030005220	S.RES ERJ2GEJ 223 X (22K)	B	92.8/6.5
R65	7030005090	S.RES ERJ2GEJ 104 X (100K)	B	50.9/9.5
R66	7030005050	S.RES ERJ2GEJ 103 X (10K)	T	86.6/11.8
R67	7030005210	S.RES ERJ2GEJ 822 X (8.2K)	T	53.4/7
R68	7030007290	S.RES ERJ2GEJ 222 X (2.2K)	B	53.7/17.9
R69	7030010040	S.RES ERJ2GEJ-JPW	T	85.6/13.6
R71	7030005090	S.RES ERJ2GEJ 104 X (100K)	T	57.7/6.3
R72	7030007290	S.RES ERJ2GEJ 222 X (2.2K)	T	64.9/55.6
R73	7030005000	S.RES ERJ2GEJ 471 X (470)	B	83.2/26.9
R74	7030007300	S.RES ERJ2GEJ 332 X (3.3K)	B	81.8/25.3
R75	7030009140	S.RES ERJ2GEJ 272 X (2.7K)	B	79.2/34
R76	7030007340	S.RES ERJ2GEJ 153 X (15K)	B	80.3/29.1
R77	7030005580	S.RES ERJ2GEJ 560 X (56)	T	78.2/47.2
R78	7030005070	S.RES ERJ2GEJ 683 X (68K)	B	81.5/34
R79	7030005040	S.RES ERJ2GEJ 472 X (4.7K)	B	74.8/50
R80	7030005040	S.RES ERJ2GEJ 472 X (4.7K)	B	70/50.9
R81	7030005110	S.RES ERJ2GEJ 224 X (220K)	B	55.5/31.4
R82	7030005110	S.RES ERJ2GEJ 224 X (220K)	B	66.3/33.3
R83	7030008400	S.RES ERJ2GEJ 182 X (1.8K)	T	32.6/10.2
R84	7030007280	S.RES ERJ2GEJ 331 X (330)	T	24.6/20.3
R85	7030005110	S.RES ERJ2GEJ 224 X (220K)	T	24.6/21.2
R86	7030007300	S.RES ERJ2GEJ 332 X (3.3K)	B	30/10.5
R87	7030007300	S.RES ERJ2GEJ 332 X (3.3K)	T	32.2/20.6
R88	7030005120	S.RES ERJ2GEJ 102 X (1K)	B	91.7/6.5
R90	7030005000	S.RES ERJ2GEJ 471 X (470)	B	89.4/18.9
R91	7030005700	S.RES ERJ2GEJ 274 X (270K)	T	85.6/11.8
R92	7030005090	S.RES ERJ2GEJ 104 X (100K)	T	87.3/13.4

M.=Mounted side (T: Mounted on the Top side, B: Mounted on the Bottom side)
S.=Surface mount

[MAIN UNIT] (Other than "MDC compatible")

REF NO.	PARTS NO.	DESCRIPTION	M.	H/V LOCATION
R93	7030005310	S.RES ERJ2GEJ 124 X (120K)	T	83.9/8.2
R94	7030005080	S.RES ERJ2GEJ 823 X (82K)	T	108/34.7
R95	7030005720	S.RES ERJ2GEJ 563 X (56K)	T	108/33.8
R96	7030005240	S.RES ERJ2GEJ 473 X (47K)	B	63.7/15.5
R97	7030005060	S.RES ERJ2GEJ 333 X (33K)	B	53.3/16.6
R98	7030005040	S.RES ERJ2GEJ 472 X (4.7K)	B	62.1/19.4
R99	7030005240	S.RES ERJ2GEJ 473 X (47K)	B	60.2/19.4
R100	7030005030	S.RES ERJ2GEJ 152 X (1.5K)	B	77.9/34.4
R101	7030008280	S.RES ERJ2GEJ 271 X (270)	B	79.2/29.1
R102	7030005530	S.RES ERJ2GEJ 100 X (10)	T	23/20.3
R103	7030005600	S.RES ERJ2GEJ 273 X (27K)	B	29.9/23.8
R104	7030007280	S.RES ERJ2GEJ 331 X (330)	T	26.9/22.6
R105	7030005600	S.RES ERJ2GEJ 273 X (27K)	B	30.9/23.8
R106	7030007270	S.RES ERJ2GEJ 151 X (150)	T	34.3/22.5
R107	7030007340	S.RES ERJ2GEJ 153 X (15K)	B	129.7/52.3
R108	7030005240	S.RES ERJ2GEJ 473 X (47K)	B	82.3/18.9
R109	7030005700	S.RES ERJ2GEJ 274 X (270K)	B	81.3/18.9
R110	7030005050	S.RES ERJ2GEJ 103 X (10K)	T	78.4/20.2
R111	7030005050	S.RES ERJ2GEJ 103 X (10K)	T	95.9/28.3
R112	7030005700	S.RES ERJ2GEJ 274 X (270K)	T	80.8/20.1
R113	7030005240	S.RES ERJ2GEJ 473 X (47K)	B	57.9/19.4
R114	7030005090	S.RES ERJ2GEJ 104 X (100K)	B	53.7/13.3
R115	7030005090	S.RES ERJ2GEJ 104 X (100K)	T	114.4/18.4
R116	7030005090	S.RES ERJ2GEJ 104 X (100K)	B	85.3/7.3
R118	7030006610	S.RES ERJ2GEJ 394 X (390K)	T	89.5/11.7
R120	7030009280	S.RES ERJ2GEJ 391 X	T	30.3/34.3
R122	7030005600	S.RES ERJ2GEJ 273 X (27K)	T	32.3/35.2
R123	7030005600	S.RES ERJ2GEJ 273 X (27K)	T	33.5/35.2
R125	7030004970	S.RES ERJ2GEJ 470 X (47)	T	35/34
R127	7030005050	S.RES ERJ2GEJ 103 X (10K)	B	79.1/18.3
R128	7030008290	S.RES ERJ2GEJ 183 X (18K)	T	112.1/45.1
R129	7030005040	S.RES ERJ2GEJ 472 X (4.7K)	T	112.1/44.1
R130	7030005070	S.RES ERJ2GEJ 683 X (68K)	T	104.9/43.2
R131	7030005070	S.RES ERJ2GEJ 683 X (68K)	T	104.9/44.1
R132	7030004980	S.RES ERJ2GEJ 101 X (100)	T	114.4/17.5
R134	7030005160	S.RES ERJ2GEJ 105 X (1M)	T	128.9/26.3
R135	7030005160	S.RES ERJ2GEJ 105 X (1M)	T	128.9/25.3
R136	7030005160	S.RES ERJ2GEJ 105 X (1M)	T	128.9/24.2
R139	7410001140	S.ARR EXB28V104JX	T	130.6/20.6
R140	7030011000	S.RES RR0510P-392-D (3.9K)	T	48.1/47.2
R141	7030008340	S.RES RR0510P-182-D (1.8K)	T	50.8/45.4
R142	7030010040	S.RES ERJ2GEJ-JPW	T	49/47.2
R143	7030011000	S.RES RR0510P-392-D (3.9K)	T	58.7/42.2
R144	7030008340	S.RES RR0510P-182-D (1.8K)	T	61.7/40.4
R145	7030010040	S.RES ERJ2GEJ-JPW	T	59.6/42.2
R146	7030011000	S.RES RR0510P-392-D (3.9K)	T	71.8/45.8
R147	7030008340	S.RES RR0510P-182-D (1.8K)	T	70/41.9
R148	7030010040	S.RES ERJ2GEJ-JPW	T	71.8/44.9
R149	7030005310	S.RES ERJ2GEJ 124 X (120K)	T	69.1/36.3
R150	7030005240	S.RES ERJ2GEJ 473 X (47K)	T	89.8/15.5
R151	7030005060	S.RES ERJ2GEJ 333 X (33K)	T	91/16.1
R152	7030005090	S.RES ERJ2GEJ 104 X (100K)	T	88.9/16.4
R153	7030007300	S.RES ERJ2GEJ 332 X (3.3K)	T	39.9/32.2
R154	7030009530	S.RES ERJ2GEJ 270 X (27)	T	42.9/40.1
R155	7030005120	S.RES ERJ2GEJ 102 X (1K)	T	41.7/32.4
R156	7030004970	S.RES ERJ2GEJ 470 X (47)	T	42.5/41.3
R157	7030005090	S.RES ERJ2GEJ 104 X (100K)	B	33.7/23.6
R158	7030005240	S.RES ERJ2GEJ 473 X (47K)	T	112.1/42.3
R159	7030005240	S.RES ERJ2GEJ 473 X (47K)	T	112.1/40.5
R160	7030005240	S.RES ERJ2GEJ 473 X (47K)	T	113.8/38.7
R161	7030005070	S.RES ERJ2GEJ 683 X (68K)	T	104.9/46.8
R162	7030005240	S.RES ERJ2GEJ 473 X (47K)	T	128.2/14.4
R163	7030005240	S.RES ERJ2GEJ 473 X (47K)	T	128.7/16.3
R164	7030005240	S.RES ERJ2GEJ 473 X (47K)	T	129.4/14.4
R165	7030005230	S.RES ERJ2GEJ 334 X (330K)	T	128.7/17.8
R166	7030005230	S.RES ERJ2GEJ 334 X (330K)	T	128.7/18.7
R167	7030005230	S.RES ERJ2GEJ 334 X (330K)	T	129.8/16.2
R168	7030006581	S.RES ERA3YED 122V (1.2K)	T	53.6/47.5
R169	7030007230	S.RES ERA3YED 102V (1K)	T	63.8/42.6
R170	7030010390	S.RES ERA3YED 821V (820)	T	74.1/43.2
R171	7030005090	S.RES ERJ2GEJ 104 X (100K)	T	56.3/46.7
R172	7030008280	S.RES ERJ2GEJ 271 X (270)	B	36.4/46.4
R173	7030007270	S.RES ERJ2GEJ 151 X (150)	B	39/31.2
R174	7030004980	S.RES ERJ2GEJ 101 X (100)	B	34.6/38.7
R175	7030004980	S.RES ERJ2GEJ 101 X (100)	B	33/38.7
R176	7030005590	S.RES ERJ2GEJ 680 X (68)	B	31.3/37.4
R177	7030005590	S.RES ERJ2GEJ 680 X (68)	B	31.3/34.9
R178	7030005240	S.RES ERJ2GEJ 473 X (47K)	T	113.8/37.8
R179	7030008300	S.RES ERJ2GEJ 184 X (180K)	T	117.6/34.6
R180	7030005720	S.RES ERJ2GEJ 563 X (56K)	T	118.3/35.3
R181	7030005220	S.RES ERJ2GEJ 223 X (22K)	T	119/36
R182	7030005120	S.RES ERJ2GEJ 102 X (1K)	T	116.9/33.9
R183	7030005070	S.RES ERJ2GEJ 683 X (68K)	T	103.1/46.8
R184	7030005220	S.RES ERJ2GEJ 223 X (22K)	T	113.8/36.9
R185	7030005070	S.RES ERJ2GEJ 683 X (68K)	B	102.3/45.6
R186	7030005160	S.RES ERJ2GEJ 105 X (1M)	T	81.8/18.9
R187	7030005060	S.RES ERJ2GEJ 333 X (33K)	T	80.6/17.5
R188	7030005090	S.RES ERJ2GEJ 104 X (100K)	T	78.5/14.9
R189	7030005720	S.RES ERJ2GEJ 563 X (56K)	T	78.5/15.8
R190	7030007350	S.RES ERJ2GEJ 393 X (39K)	T	80.6/18.4
R191	7030004980	S.RES ERJ2GEJ 101 X (100)	T	60.5/47
R192	7030004980	S.RES ERJ2GEJ 101 X (100)	B	66.3/53.2
R193	7030005050	S.RES ERJ2GEJ 103 X (10K)	B	66.3/45.2
R194	7030005110	S.RES ERJ2GEJ 224 X (220K)	B	62.7/50.8
R195	7030009320	S.RES ERJ2GEJ 4R7 X (4.7)	B	55.8/50.3
R196	7030005120	S.RES ERJ2GEJ 102 X (1K)	B	65.2/42.8
R197	7030005050	S.RES ERJ2GEJ 103 X (10K)	B	64.7/44.5
R198	7030010090	S.RES ERJ2GEJ 180 X (18)	B	36/47.6
R199	7030008280	S.RES ERJ2GEJ 271 X (270)	B	37.3/47.6
R200	7030005050	S.RES ERJ2GEJ 103 X (10K)	B	8.4/20.6
R201	7410001130	S.ARR EXB28V102JX	B	117/51.7
R202	7030005090	S.RES ERJ2GEJ 104 X (100K)	B	122.5/44.8
R203	7030005120	S.RES ERJ2GEJ 102 X (1K)	B	127.4/47.3
R204	7410000750	S.ARR EXB-V4V 104JV (100K)	B	129.6/42.7
R205	7030008010	S.RES ERJ2GEJ 123 X (12K)	T	127.5/40.1

[MAIN UNIT] (Other than "MDC compatible")

REF NO.	PARTS NO.	DESCRIPTION	M.	H/V LOCATION
R206	7030005120	S.RES ERJ2GEJ 102 X (1K)	B	127/39.5
R207	7030005050	S.RES ERJ2GEJ 103 X (10K)	T	120.9/37.5
R208	7030005050	S.RES ERJ2GEJ 103 X (10K)	T	121.6/38.2
R209	7410001130	S.ARR EXB28V102JX	B	125.8/40.8
R210	7030008010	S.RES ERJ2GEJ 123 X (12K)	T	124.2/38.4
R211	7030008010	S.RES ERJ2GEJ 123 X (12K)	T	125.9/41.1
R212	7030005160	S.RES ERJ2GEJ 105 X (1M)	T	122.1/41.1
R213	7030005090	S.RES ERJ2GEJ 104 X (100K)	B	55.3/51.8
R214	7030004980	S.RES ERJ2GEJ 101 X (100)	B	56.4/54
R215	7030005050	S.RES ERJ2GEJ 103 X (10K)	B	63.5/61.3
R216	7030005590	S.RES ERJ2GEJ 680 X (68)	B	61.9/62.3
R218	7030010040	S.RES ERJ2GEJ-JPW	B	56.4/51.8
R219	7030005050	S.RES ERJ2GEJ 103 X (10K)	B	46/49.8
R220	7030005040	S.RES ERJ2GEJ 472 X (4.7K)	B	49.3/52
R221	7030005050	S.RES ERJ2GEJ 103 X (10K)	B	44.4/49.8
R222	7030005090	S.RES ERJ2GEJ 104 X (100K)	B	17.7/33.9
R223	7030005090	S.RES ERJ2GEJ 104 X (100K)	B	16.2/33.9
R224	7030005050	S.RES ERJ2GEJ 103 X (10K)	B	15.7/32.7
R225	7030005000	S.RES ERJ2GEJ 471 X (470)	B	8/19.2
R226	7030004980	S.RES ERJ2GEJ 101 X (100)	T	109.7/53.5
R227	7030005090	S.RES ERJ2GEJ 104 X (100K)	B	107.1/49.3
R228	7410001140	S.ARR EXB28V104JX	T	103.3/49
R230	7030005050	S.RES ERJ2GEJ 103 X (10K)	B	124.7/42.7
R232	7030005530	S.RES ERJ2GEJ 100 X (10)	T	120.4/41.1
R233	7410000750	S.ARR EXB-V4V 104JV (100K)	T	130/34.7
R234	7410001130	S.ARR EXB28V102JX	B	129.4/34.4
R236	7030009530	S.RES ERJ2GEJ 270 X (27)	B	63.9/71.5
R237	7030005040	S.RES ERJ2GEJ 472 X (4.7K)	B	65.3/69.7
R238	7030008010	S.RES ERJ2GEJ 123 X (12K)	B	61.9/65.1
R240	7030005570	S.RES ERJ2GEJ 820 X (82)	B	62.4/67.4
R241	7030004980	S.RES ERJ2GEJ 101 X (100)	B	58.5/66
R242	7030004970	S.RES ERJ2GEJ 470 X (47)	T	12/33.1
R243	7030009320	S.RES ERJ2GEJ 4R7 X (4.7)	T	10/36
R244	7030005000	S.RES ERJ2GEJ 471 X (470)	B	15.1/36.3
R245	7030005530	S.RES ERJ2GEJ 100 X (10)	B	11.9/39.9
R246	7030005090	S.RES ERJ2GEJ 104 X (100K)	B	7.5/38.6
R247	7030004990	S.RES ERJ2GEJ 221 X (220)	B	7.7/36.3
R248	7410001130	S.ARR EXB28V102JX	B	103.9/47.9
R249	7410001130	S.ARR EXB28V102JX	B	123.9/27.6
R250	7410001130	S.ARR EXB28V102JX	B	122.1/25.7
R251	7410001140	S.ARR EXB28V104JX	T	124.7/28.7
R252	7410001140	S.ARR EXB28V104JX	T	122.1/25.7
R253	7030005720	S.RES ERJ2GEJ 563 X (56K)	T	9.5/40.5
R254	7030005050	S.RES ERJ2GEJ 103 X (10K)	T	7.4/42.2
R255	7030005310	S.RES ERJ2GEJ 124 X (120K)	B	6.6/38.6
R256	7030006610	S.RES ERJ2GEJ 394 X (390K)	T	13/41
R257	7030005040	S.RES ERJ2GEJ 472 X (4.7K)	T	9/42.2
R258	7030005170	S.RES ERJ2GEJ 474 X (470K)	T	11/44.5
R259	7030005090	S.RES ERJ2GEJ 104 X (100K)	B	6/45.1
R260	7030005090	S.RES ERJ2GEJ 104 X (100K)	B	6/47
R261	7410001130	S.ARR EXB28V102JX	B	99.7/43.5
R262	7410001130	S.ARR EXB28V102JX	T	100.2/37.4
R263	7410001130	S.ARR EXB28V102JX	B	97/40.7
R264	7410001140	S.ARR EXB28V104JX	T	103.8/37
R265	7030005050	S.RES ERJ2GEJ 103 X (10K)	T	103.8/39.2
R266	7410001130	S.ARR EXB28V102JX	B	120.1/23.5
R267	7410001130	S.ARR EXB28V102JX	B	118.3/21.7
R268	7410001130	S.ARR EXB28V102JX	B	116.5/19.9
R269	7030005090	S.RES ERJ2GEJ 104 X (100K)	T	119.4/20.8
R271	7030004980	S.RES ERJ2GEJ 101 X (100)	T	77.6/78.5
R272	7030007280	S.RES ERJ2GEJ 331 X (330)	T	61/76.5
R273	7030005050	S.RES ERJ2GEJ 103 X (10K) [E]	T	62.3/76.1
	7030005050	S.RES ERJ2GEJ 103 X (10K) [C]		
R274	7030004980	S.RES ERJ2GEJ 101 X (100)	T	56.7/69.3
R275	7030005030	S.RES ERJ2GEJ 152 X (1.5K)	T	64.8/73.8
R276	7030007300	S.RES ERJ2GEJ 332 X (3.3K) [A]	T	65.8/73.8
	7030005040	S.RES ERJ2GEJ 472 X (4.7K) [E]		
	7030005040	S.RES ERJ2GEJ 472 X (4.7K) [C]		
R277	7030005050	S.RES ERJ2GEJ 103 X (10K)	B	4.8/45.6
R278	7030005050	S.RES ERJ2GEJ 103 X (10K)	T	132.2/29.9
R279	7030005090	S.RES ERJ2GEJ 104 X (100K)	T	131.3/29.9
R280	7410001130	S.ARR EXB28V102JX	B	95.2/38.9
R281	7030005090	S.RES ERJ2GEJ 104 X (100K)	T	93.7/48.8
R282	7410000750	S.ARR EXB-V4V 104JV (100K)	T	97.2/45.3
R283	7410001130	S.ARR EXB28V102JX	T	103.1/21.7
R284	7030005120	S.RES ERJ2GEJ 102 X (1K)	T	111.2/25.1
R285	7410001130	S.ARR EXB28V102JX	B	107.1/19.9
R286	7410001140	S.ARR EXB28V104JX	T	121.7/22.2
R287	7030005580	S.RES ERJ2GEJ 560 X (56) [A]	T	55.7/72.6
	7030004990	S.RES ERJ2GEJ 221 X (220) [E]		
	7030004990	S.RES ERJ2GEJ 221 X (220) [C]		
R288	7030005100	S.RES ERJ2GEJ 154 X (150K)	T	54.1/68.2
R289	7030005170	S.RES ERJ2GEJ 474 X (470K) [A] only	B	38/63.7
R290	7520000260	S.POS PRF18BB471QB1RB [A] only	T	33.9/63
R291	7030005120	S.RES ERJ2GEJ 102 X (1K)	T	109.2/24.5
R292	7030006070	S.RES ERJ12YJ101U (100)	B	43.6/66.1
R293	7030005120	S.RES ERJ2GEJ 102 X (1K)	T	50.6/70.5
R294	7030005050	S.RES ERJ2GEJ 103 X (10K)	T	51.7/68.2
R295	7030008290	S.RES ERJ2GEJ 183 X (18K)	T	50.6/71.4
R296	7030005040	S.RES ERJ2GEJ 472 X (4.7K)	T	53.8/64.2
R297	7030008010	S.RES ERJ2GEJ 123 X (12K)	T	50.5/68.6
R298	7030005090	S.RES ERJ2GEJ 104 X (100K)	T	45.6/69.9
R300	7030005050	S.RES ERJ2GEJ 103 X (10K)	B	99.9/59.6
R301	7030007290	S.RES ERJ2GEJ 222 X (2.2K)	T	106.2/55.6
R302	7030000480	S.RES MCR10EZHJ 6.8K (682)	T	79/64.4
R303	7030000480	S.RES MCR10EZHJ 6.8K (682)	T	80.9/64.4
R304	7030000440	S.RES MCR10EZHJ 3.3K (332)	T	82.8/64.4
R305	7030005050	S.RES ERJ2GEJ 103 X (10K)	T	40.3/19.4
R306	7030005040	S.RES ERJ2GEJ 472 X (4.7K)	T	41/21.7
R307	7030005050	S.RES ERJ2GEJ 103 X (10K)	B	27/63
R309	7030005070	S.RES ERJ2GEJ 683 X (68K)	T	89.9/7.2
R310	7030004980	S.RES ERJ2GEJ 101 X (100)	B	109.3/62.8
R311	7030000220	S.RES MCR10EZHJ 47 (470)	B	15/76.9
R312	7030005700	S.RES ERJ2GEJ 274 X (270K)	B	31.5/62.4
R313	7030003370	S.RES ERJ3GEYJ 271 V (270)	B	8.6/54

M.=Mounted side (T: Mounted on the Top side, B: Mounted on the Bottom side)
S.=Surface mount

[MAIN UNIT] (Other than "MDC compatible")

REF NO.	PARTS NO.	DESCRIPTION	M.	H/V LOCATION
R314	7030005600	S.RES ERJ2GEJ 273 X (27K)	B	3/53
R315	7030000220	S.RES MCR10EZHJ 47 (470)	B	3.5/57.4
R316	7030005170	S.RES ERJ2GEJ 474 X (470K)	T	90.8/11.3
R317	7030005160	S.RES ERJ2GEJ 105 X (1M)	B	108.3/83.7
R318	7030005160	S.RES ERJ2GEJ 105 X (1M)	B	112.5/82.7
R319	7030005120	S.RES ERJ2GEJ 102 X (1K)	B	112.1/81.5
R320	7030005160	S.RES ERJ2GEJ 105 X (1M)	B	107.2/82.4
R321	7030004970	S.RES ERJ2GEJ 470 X (47)	B	108.4/82
R322	7030005600	S.RES ERJ2GEJ 273 X (27K)	B	2.1/79.2
R323	7030003370	S.RES ERJ3GEYJ 271 V (270)	B	6.3/78.7
R324	7030000620	S.RES MCR10EZHJ 100 K (104)	B	5.6/85.5
R325	7030005050	S.RES ERJ2GEJ 103 X (10K)	B	130.5/45.2
R326	7030005090	S.RES ERJ2GEJ 104 X (100K)	B	131.8/51.7
R327	7030007290	S.RES ERJ2GEJ 222 X (2.2K)	B	131.1/54.2
R328	7030005090	S.RES ERJ2GEJ 104 X (100K)	B	134.2/51.7
R332	7030005090	S.RES ERJ2GEJ 104 X (100K)	T	109.6/27.9
R333	7030005120	S.RES ERJ2GEJ 102 X (1K)	T	109.6/26.9
R334	7030000100	S.RES MCR10EZHJ 4.7 (4R7)	T	101.4/79.7
R335	7030005050	S.RES ERJ2GEJ 103 X (10K)	T	101.8/83.9
R336	7030005120	S.RES ERJ2GEJ 102 X (1K)	T	111.3/78.5
R337	7410001130	S.ARR EXB28V102JX	T	104.6/75.9
R338	7030005651	S.RES ERA3YKD 304V (300K)	T	113.6/54.3
R339	7030005871	S.RES ERA3YKD 104V (100K)	T	113.6/52.9
R340	7030003560	S.RES ERJ3GEYJ 103 V (10K)	T	136.3/65.7
R341	7030003560	S.RES ERJ3GEYJ 103 V (10K)	B	130.7/85.9
R342	7030005090	S.RES ERJ2GEJ 104 X (100K)	B	135.4/52.2
R343	7030007290	S.RES ERJ2GEJ 222 X (2.2K)	B	138.2/49.4
R344	7030005110	S.RES ERJ2GEJ 224 X (220K)	B	133.3/54.6
R345	7030005110	S.RES ERJ2GEJ 224 X (220K)	B	133.3/56.3
R346	7030008410	S.RES ERJ2GEJ 392 X (3.9K)	B	137/52.2
R347	7030005050	S.RES ERJ2GEJ 103 X (10K)	B	137.8/53.7
R348	7030005700	S.RES ERJ2GEJ 274 X (270K)	B	129.1/77.2
R349	7030005090	S.RES ERJ2GEJ 104 X (100K)	B	127.8/77.7
R350	7030005120	S.RES ERJ2GEJ 102 X (1K)	B	139.1/47.8
R351	7030004980	S.RES ERJ2GEJ 101 X (100)	B	136.3/38.1
R352	7030008300	S.RES ERJ2GEJ 184 X (180K)	B	139.7/39
R353	7030005230	S.RES ERJ2GEJ 334 X (330K)	B	138.2/47.8
R354	7030010040	S.RES ERJ2GEJ-JPW	T	140.4/36
R355	7030008280	S.RES ERJ2GEJ 271 X (270)	B	139.7/34.3
R356	7540000290	ABS ERZV10D220		
R359	7030005090	S.RES ERJ2GEJ 104 X (100K)	B	114.8/82.9
R360	7030005090	S.RES ERJ2GEJ 104 X (100K)	T	80.6/5.3
R361	7030005600	S.RES ERJ2GEJ 273 X (27K)	T	78.4/5.3
R362	7030005050	S.RES ERJ2GEJ 103 X (10K)	T	124.8/50.2
R363	7030005120	S.RES ERJ2GEJ 102 X (1K)	T	42.9/38.3
R364	7030009140	S.RES ERJ2GEJ 272 X (2.7K)	T	42.9/37.4
R365	7030004970	S.RES ERJ2GEJ 470 X (47)	T	38.3/37.9
R366	7030005050	S.RES ERJ2GEJ 103 X (10K)	B	131.4/63.4
R367	7030005000	S.RES ERJ2GEJ 471 X (470)	B	130.1/63
R368	7030005050	S.RES ERJ2GEJ 103 X (10K)	T	78.3/7.6
R370	7030005010	S.RES ERJ2GEJ 681 X (680)	T	71.2/70.4
R371	7030005050	S.RES ERJ2GEJ 103 X (10K)	T	119.5/84.6
R372	7030005040	S.RES ERJ2GEJ 472 X (4.7K)	T	25.9/8.1
R373	7030005040	S.RES ERJ2GEJ 472 X (4.7K)	T	74/21.6
R375	7030005030	S.RES ERJ2GEJ 152 X (1.5K)	T	27.6/5.3
R376	7030005160	S.RES ERJ2GEJ 105 X (1M)	B	109.1/12.1
R377	7030005160	S.RES ERJ2GEJ 105 X (1M)	B	110.9/12.1
R378	7410001140	S.ARR EXB28V104JX	B	100.7/18.3
R379	7030005090	S.RES ERJ2GEJ 104 X (100K)	T	111.6/23.8
R386	7030005120	S.RES ERJ2GEJ 102 X (1K)	T	105.8/85.1
R387	7030005120	S.RES ERJ2GEJ 102 X (1K)	T	107.8/85.1
R389	7030005090	S.RES ERJ2GEJ 104 X (100K)	T	110.4/10.7
R390	7030005120	S.RES ERJ2GEJ 102 X (1K)	B	79.8/46.1
R391	7030005120	S.RES ERJ2GEJ 102 X (1K)	T	79.3/41.3
C1	4030017420	S.CER ECJ0EC1H470J	T	88.9/54.3
C2	4030017420	S.CER ECJ0EC1H470J	T	89.9/54.3
C3	4030017420	S.CER ECJ0EC1H470J	T	41.5/15.4
C4	4030017420	S.CER ECJ0EC1H470J	B	50/15
C5	4030017460	S.CER ECJ0EB1E102K	T	89.4/34
C6	4550007080	S.TAN TEESVA 1C 106M8R	T	80.8/55.1
C7	4030017420	S.CER ECJ0EC1H470J	T	84/18.4
C8	4030017420	S.CER ECJ0EC1H470J	T	89.9/52
C9	4030016930	S.CER ECJ0EB1A104K	T	88.9/52
C10	4030016930	S.CER ECJ0EB1A104K	T	80.6/50.7
C11	4030016930	S.CER ECJ0EB1A104K	T	10.9/18.8
C12	4030016930	S.CER ECJ0EB1A104K	T	8.5/7.4
C13	4030016930	S.CER ECJ0EB1A104K	T	85.6/10
C14	4030016930	S.CER ECJ0EB1A104K	T	86.6/10
C15	4030017460	S.CER ECJ0EB1E102K	T	41.5/7.7
C16	4550000460	S.TAN TEESVA 1C 105M8R	T	42.7/6.2
C17	4550000460	S.TAN TEESVA 1C 105M8R	B	42.7/6.2
C18	4030017420	S.CER ECJ0EC1H470J	T	41.5/14.5
C19	4030017420	S.CER ECJ0EC1H470J	B	50/15.9
C20	4030016970	S.CER ECJ0EB1C223K	B	100.9/52.3
C21	4030017420	S.CER ECJ0EC1H470J	T	41.5/13.5
C22	4030017420	S.CER ECJ0EC1H470J	T	41.5/12.6
C23	4030016930	S.CER ECJ0EB1A104K	T	51.8/5.6
C24	4030017420	S.CER ECJ0EC1H470J	B	39.8/9.8
C25	4030017420	S.CER ECJ0EC1H470J	T	61.4/6
C26	4030016930	S.CER ECJ0EB1A104K	B	37.2/5.8
C27	4030017760	S.CER ECJ0EB1H222K	B	36.3/7.5
C28	4030016790	S.CER ECJ0EB1C103K	T	79.3/7.6
C29	4030017460	S.CER ECJ0EB1E102K	T	79/13.6
C30	4030016930	S.CER ECJ0EB1A104K	T	78.1/13.6
C31	4030017460	S.CER ECJ0EB1E102K	T	80.6/51.7
C32	4030017500	S.CER ECJ0EC1H560J	B	33.3/15.9
C33	4030016930	S.CER ECJ0EB1A104K	B	34.8/12.8
C34	4030017570	S.CER ECJ0EC1H040B	B	32.1/15.4
C35	4030017590	S.CER ECJ0EC1H070C	B	30.9/15.9
C36	4030016930	S.CER ECJ0EB1A104K	T	22.4/14.9
C37	4030017360	S.CER ECJ0EC1H030B	B	28.3/15.4
C38	4030016930	S.CER ECJ0EB1A104K	T	22/6.2
C39	4030016930	S.CER ECJ0EB1A104K	B	13.6/6.2

[MAIN UNIT] (Other than "MDC compatible")

REF NO.	PARTS NO.	DESCRIPTION	M.	H/V LOCATION
C40	4030016930	S.CER ECJ0EB1A104K	T	23.8/6.2
C41	4030016930	S.CER ECJ0EB1A104K	T	22/12.5
C42	4030016930	S.CER ECJ0EB1A104K	T	23/12.5
C43	4030017430	S.CER ECJ0EC1H101J	T	26.4/9.4
C44	4030017430	S.CER ECJ0EC1H101J	T	25.5/9.4
C45	4030017790	S.CER ECJ0EB1E682K	B	91.7/10
C46	4030016930	S.CER ECJ0EB1A104K	B	93.8/10
C47	4030016970	S.CER ECJ0EB1C223K	T	92.1/15.1
C48	4030017710	S.CER ECJ0EC1H181J	B	49.7/9.1
C49	4550007080	S.TAN TEESVA 1C 106M8R	T	52.1/15.4
C50	4030017460	S.CER ECJ0EB1E102K	T	54.3/12
C51	4030017400	S.CER ECJ0EC1H220J	T	47.8/19
C52	4030017400	S.CER ECJ0EC1H220J	T	44.7/7.8
C53	4030017900	S.CER ECJ0EB1C123K	T	59.1/10.6
C54	4030018080	S.CER ECJ0EB1H182K	T	59.1/11.5
C55	4030016790	S.CER ECJ0EB1C103K	T	64.5/57
C56	4030017620	S.CER ECJ0EC1H100C	T	87.7/35.5
C57	4030016930	S.CER ECJ0EB1A104K	T	80.1/36.7
C58	4030017430	S.CER ECJ0EC1H101J	T	85.2/38.6
C59	4030017460	S.CER ECJ0EB1E102K	T	81.8/24.3
C60	4030017420	S.CER ECJ0EC1H470J	T	82.9/41.5
C63	4030017620	S.CER ECJ0EC1H100C	T	84/39.1
C64	4030017780	S.CER ECJ0EB1E472K	T	81.3/41.3
C65	4030017460	S.CER ECJ0EB1E102K	T	27.6/10.6
C66	4550006050	S.TAN TEESVA 0J 106M8R	T	31.1/6.8
C67	4030017460	S.CER ECJ0EB1E102K	T	27.6/7.1
C68	4030017460	S.CER ECJ0EB1E102K	T	30.5/9
C69	4030017460	S.CER ECJ0EB1E102K	T	32.6/15.4
C70	4030017420	S.CER ECJ0EC1H470J	B	28.3/13.4
C71	4030016940	S.CER ECJ0EB1A393K	B	91.7/8.3
C72	4030018860	S.CER ECJ0EB0J105K	B	50.7/11
C73	4030017750	S.CER ECJ0EB1E122K	B	51.3/16.6
C74	4030016930	S.CER ECJ0EB1A104K	B	52.3/16.6
C75	4030016930	S.CER ECJ0EB1A104K	B	56.2/12.6
C77	4030017460	S.CER ECJ0EB1E102K	B	54.2/16.6
C78	4030017460	S.CER ECJ0EB1E102K	B	53.7/9
C79	4550007080	S.TAN TEESVA 1C 106M8R	T	66.5/55.3
C80	4030017780	S.CER ECJ0EB1E472K	B	79.2/35
C81	4550000460	S.TAN TEESVA 1C 105M8R	B	82.2/36.4
C82	4030017460	S.CER ECJ0EB1E102K	B	84.1/26.9
C83	4550000460	S.TAN TEESVA 1C 105M8R	B	84/32.5
C84	4030017460	S.CER ECJ0EB1E102K	T	78.2/48.8
C85	4030017380	S.CER ECJ0EC1H050B	B	77.1/47.2
C86	4030017350	S.CER ECJ0EC1H020B	B	74.8/48.3
C87	4030017580	S.CER ECJ0EC1H060C	B	73.7/48.3
C88	4030017380	S.CER ECJ0EC1H050B	B	72.4/48.6
C89	4030017580	S.CER ECJ0EC1H060C	B	71.1/49.1
C90	4030017350	S.CER ECJ0EC1H020B	B	70/49.1
C91	4030016790	S.CER ECJ0EB1C103K	T	27.3/17.3
C92	4030017460	S.CER ECJ0EB1E102K	T	25.2/22.4
C93	4030017680	S.CER ECJ0EC1H820J	T	32.6/12.6
C94	4030017460	S.CER ECJ0EB1E102K	B	27.8/12.5
C95	4030016790	S.CER ECJ0EB1C103K	T	28.9/20.1
C96	4030016930	S.CER ECJ0EB1A104K	B	32.8/8.1
C97	4030016930	S.CER ECJ0EB1A104K	B	29.6/9
C98	4030016930	S.CER ECJ0EB1A104K	B	89.3/7.3
C99	4030016930	S.CER ECJ0EB1A104K	B	90.7/14.8
C100	4030016930	S.CER ECJ0EB1A104K	T	87.3/14.3
C101	4030017710	S.CER ECJ0EC1H181J	T	83.9/7.2
C102	4030016930	S.CER ECJ0EB1A104K	T	108/32.8
C103	4030016930	S.CER ECJ0EB1A104K	B	55.3/19.3
C104	4550003250	S.TAN TEESVA 1V 474M8R	B	67.2/24.2
C105	4030017420	S.CER ECJ0EC1H470J	T	49.2/29.4
C106	4030017460	S.CER ECJ0EB1E102K	B	78/29.1
C107	4030016930	S.CER ECJ0EB1A104K	B	54.2/28.8
C109	4550006480	S.TAN TEESVA 1C 475M8R	B	56.1/27.7
C110	4030017420	S.CER ECJ0EC1H470J	T	60.1/27
C111	4030016930	S.CER ECJ0EB1A104K	B	66.3/30.3
C112	4030017460	S.CER ECJ0EB1E102K	B	67.4/30.3
C113	4030017420	S.CER ECJ0EC1H470J	T	72.1/26.6
C114	4030016790	S.CER ECJ0EB1C103K	T	24.3/22.4
C115	4030016790	S.CER ECJ0EB1C103K	T	23/21.2
C116	4030016790	S.CER ECJ0EB1C103K	T	28.5/22.6
C118	4030017640	S.CER ECJ0EC1H150J	T	20.5/28.7
C120	4030016790	S.CER ECJ0EB1C103K	T	32.6/22.5
C121	4030017570	S.CER ECJ0EC1H040B	T	34.8/23.5
C122	4030017390	S.CER ECJ0EC1H180J	T	39.8/28.9
C124	4030016930	S.CER ECJ0EB1A104K	B	90.3/18.9
C125	4030017460	S.CER ECJ0EB1E102K	B	128.5/52.6
C126	4030016930	S.CER ECJ0EB1A104K	T	79.6/20.6
C127	4030016930	S.CER ECJ0EB1A104K	B	82.8/20.1
C128	4030016930	S.CER ECJ0EB1A104K	T	78.4/19.3
C129	4030016930	S.CER ECJ0EB1A104K	B	63.7/16.4
C130	4030016930	S.CER ECJ0EB1A104K	B	135.6/25.4
C131	4030017660	S.CER ECJ0EC1H330J	T	135.9/25.7
C132	4030017660	S.CER ECJ0EC1H330J	T	135.9/18
C133	4030018010	S.CER ECJ0EC1H360J	T	48.1/35.5
C134	4030017640	S.CER ECJ0EC1H150J	T	49.4/34.8
C135	4030017660	S.CER ECJ0EC1H330J	T	64.1/32.5
C136	4030017340	S.CER ECJ0EC1H010B	T	71.1/30.8
C137	4030017570	S.CER ECJ0EC1H040B	T	71.1/29.9
C138	4030017730	S.CER ECJ0EB1E471K	T	71.9/33
C139	4030017390	S.CER ECJ0EC1H180J	T	62.1/32
C140	4030017360	S.CER ECJ0EC1H030B	T	72.5/30.7
C141	4030017360	S.CER ECJ0EC1H030B	T	72.1/29
C142	4030018860	S.CER ECJ0EB0J105K	T	89.5/12.7
C143	4030017400	S.CER ECJ0EC1H220J	T	71.3/36.6
C145	4030016790	S.CER ECJ0EB1C103K	T	31.4/35.2
C147	4030016790	S.CER ECJ0EB1C103K	T	34.5/35.2
C148	4030016790	S.CER ECJ0EB1C103K	T	30.9/26.4
C149	4030016930	S.CER ECJ0EB1A104K	B	78.2/17.4
C150	4030018560	S.CER C2012 JB 1A 475K-T	B	86.9/19.8
C151	4030016930	S.CER ECJ0EB1A104K	T	112.1/46
C152	4030016930	S.CER ECJ0EB1A104K	T	109.6/34.3
C153	4030017460	S.CER ECJ0EB1E102K	T	111.4/34.3

M.=Mounted side (T: Mounted on the Top side, B: Mounted on the Bottom side)
S.=Surface mount

[MAIN UNIT] (Other than "MDC compatible")

REF NO.	PARTS NO.	DESCRIPTION	M.	H/V LOCATION
C154	4030018860	S.CER ECJ0EB0J105K	T	82.7/19.8
C155	4030017420	S.CER ECJ0EC1H470J	T	110.3/38.7
C156	4030017910	S.CER ECJ0EB1H152K	T	104.9/42.3
C157	4030017420	S.CER ECJ0EC1H470J	T	110.8/48.6
C158	4030017430	S.CER ECJ0EC1H101J	T	110.3/37.8
C159	4030017460	S.CER ECJ0EB1E102K	T	120.3/5.5
C160	4030017460	S.CER ECJ0EB1E102K	B	130.6/25.4
C161	4030018010	S.CER ECJ0EC1H360J	T	50.8/43.8
C162	4030017590	S.CER ECJ0EC1H070C	T	52.1/43.4
C163	4030017660	S.CER ECJ0EC1H330J	T	58.7/39.4
C164	4030017660	S.CER ECJ0EC1H330J	T	48.6/45.8
C165	4030017660	S.CER ECJ0EC1H330J	T	49.9/45.4
C166	4030017580	S.CER ECJ0EC1H060C	T	60.1/38.9
C167	4030017420	S.CER ECJ0EC1H470J	T	70/38.9
C168	4030017660	S.CER ECJ0EC1H330J	T	59.1/40.8
C169	4030017660	S.CER ECJ0EC1H330J	T	60.7/40.4
C170	4030017550	S.CER ECJ0EC1H1R5B	T	70.4/36.6
C171	4030017570	S.CER ECJ0EC1H040B	T	70/37.9
C172	4030017400	S.CER ECJ0EC1H220J	T	70/42.9
C173	4030017400	S.CER ECJ0EC1H220J	T	70/43.9
C174	4030017640	S.CER ECJ0EC1H150J	T	38.3/38.8
C175	4030016790	S.CER ECJ0EB1C103K	B	41.4/39.4
C176	4030016930	S.CER ECJ0EB1A104K	B	41/33.2
C177	4030017730	S.CER ECJ0EB1E471K	B	41/32.2
C178	4030016790	S.CER ECJ0EB1C103K	B	34.5/33
C180	4030017740	S.CER ECJ0EB1E821K	T	109.2/48.6
C181	4030016930	S.CER ECJ0EB1A104K	T	112.1/43.2
C182	4030016780	S.CER ECJ0EB1C153K	T	112.1/39.6
C183	4030017420	S.CER ECJ0EC1H470J	T	104.9/45
C184	4030017760	S.CER ECJ0EB1H222K	T	104.9/45.9
C185	4030017690	S.CER ECJ0EC1H121J	T	107.8/48.6
C186	4030016790	S.CER ECJ0EB1C103K	T	51.7/45.4
C187	4030017460	S.CER ECJ0EB1E102K	T	52.6/45.4
C188	4030016790	S.CER ECJ0EB1C103K	T	62.7/40.4
C189	4030017460	S.CER ECJ0EB1E102K	T	63.7/40.4
C190	4030017540	S.CER ECJ0EC1HR75B	T	55/48.3
C191	4030016790	S.CER ECJ0EB1C103K	T	70/40.9
C192	4030017540	S.CER ECJ0EC1HR75B	T	57.7/43
C193	4030017460	S.CER ECJ0EB1E102K	T	70/39.9
C194	4030017530	S.CER ECJ0EC1H0R5B	T	60/44.4
C195	4030016930	S.CER ECJ0EB1A104K	B	39/30
C196	4030017730	S.CER ECJ0EB1E471K	B	38.1/33.2
C197	4030016930	S.CER ECJ0EB1A104K	B	38.1/32.2
C198	4030017730	S.CER ECJ0EB1E471K	B	31.3/38.3
C199	4030016930	S.CER ECJ0EB1A104K	B	31.3/39.2
C200	4030016930	S.CER ECJ0EB1A104K	B	31.3/34
C201	4030017730	S.CER ECJ0EB1E471K	B	31.3/33.1
C202	4030017460	S.CER ECJ0EB1E102K	T	112.1/38.7
C203	4030017460	S.CER ECJ0EB1E102K	B	100.9/47
C205	4030018900	S.CER ECJ0EB0J474K	T	78.4/18.4
C206	4030016930	S.CER ECJ0EB1A104K	T	78.5/16.7
C207	4030017730	S.CER ECJ0EB1E471K	T	61/45.7
C208	4030017460	S.CER ECJ0EB1E102K	T	60/45.7
C209	4030017460	S.CER ECJ0EB1E102K	B	65/52.7
C210	4030017590	S.CER ECJ0EC1H070C	B	57.6/50.3
C211	4030017620	S.CER ECJ0EC1H100C	B	60/51.4
C212	4030017460	S.CER ECJ0EB1E102K	B	63.8/50.8
C214	4030017460	S.CER ECJ0EB1E102K	B	66.8/41.3
C215	4030017390	S.CER ECJ0EC1H180J	B	38.5/47.6
C216	4030017660	S.CER ECJ0EC1H330J	B	43.1/47.6
C217	4030017730	S.CER ECJ0EB1E471K	B	25/32.7
C218	4030016930	S.CER ECJ0EB1A104K	B	25/31.7
C219	4030017650	S.CER ECJ0EC1H270J	B	23/36.3
C220	4030017600	S.CER ECJ0EC1H080C	B	23/38
C221	4030016930	S.CER ECJ0EB1A104K	B	5.6/23.2
C222	4030017030	S.CER ECJ0EB1A273K	B	128.6/45.3
C223	4030016930	S.CER ECJ0EB1A104K	B	126.3/48.2
C224	4030017640	S.CER ECJ0EC1H150J	T	124.2/40.1
C225	4030016790	S.CER ECJ0EB1C103K	T	124.2/37.4
C226	4030017580	S.CER ECJ0EC1H060C	T	124.2/41.1
C227	4030017460	S.CER ECJ0EB1E102K	B	57.6/53.5
C228	4030017460	S.CER ECJ0EB1E102K	B	56.4/53.1
C229	4030017620	S.CER ECJ0EC1H100C	B	52.1/53.1
C230	4030017460	S.CER ECJ0EB1E102K	B	63.5/62.3
C231	4030017360	S.CER ECJ0EC1H030B	B	66.3/52.2
C232	4030017460	S.CER ECJ0EB1E102K	B	68.6/49.5
C235	4030017460	S.CER ECJ0EB1E102K	B	44.4/50.7
C236	4030017390	S.CER ECJ0EC1H180J	B	47.8/48.1
C237	4030017620	S.CER ECJ0EC1H100C	B	47.4/49.4
C240	4030017460	S.CER ECJ0EB1E102K	B	18.9/34.4
C241	4030017360	S.CER ECJ0EC1H030B	B	17/37.7
C242	4030017460	S.CER ECJ0EB1E102K	B	15/34.4
C243	4030017460	S.CER ECJ0EB1E102K	B	18.9/33.5
C244	4030017460	S.CER ECJ0EB1E102K	B	15.7/31.7
C245	4550006780	S.TAN TEESVB2 0J 476M8R	B	5.6/18.7
C246	4030016930	S.CER ECJ0EB1A104K	B	105.1/52.2
C247	4030016930	S.CER ECJ0EB1A104K	B	107/52.9
C248	4030016930	S.CER ECJ0EB1A104K	B	108.1/52
C249	4030018900	S.CER ECJ0EB0J474K	B	121.8/47.4
C250	4030017630	S.CER ECJ0EC1H120J	T	120.4/40.1
C251	4030017400	S.CER ECJ0EC1H220J	B	61.9/64.2
C252	4030017420	S.CER ECJ0EC1H470J	B	62.6/71.1
C253	4030017730	S.CER ECJ0EB1E471K	B	61.6/71.1
C254	4030017420	S.CER ECJ0EC1H470J	B	63.9/69.5
C256	4030017460	S.CER ECJ0EB1E102K	B	59.7/65.5
C257	4030017460	S.CER ECJ0EB1E102K	B	63.4/67.4
C258	4030017460	S.CER ECJ0EB1E102K	T	13.9/32.5
C259	4030017460	S.CER ECJ0EB1E102K	T	10/35
C260	4030017590	S.CER ECJ0EC1H070C	B	14.2/36.3
C261	4030017460	S.CER ECJ0EB1E102K	B	9.5/33.9
C262	4030017460	S.CER ECJ0EB1E102K	B	13.7/37.7
C263	4030017490	S.CER C1608 JB 1A 105K-T	T	14.1/33.7
C264	4030017350	S.CER ECJ0EC1H020B	B	8.4/38.6
C265	4030017420	S.CER ECJ0EC1H470J	B	8.6/36.3
C266	4030017460	S.CER ECJ0EB1E102K	B	9.5/36.3

[MAIN UNIT] (Other than "MDC compatible")

REF NO.	PARTS NO.	DESCRIPTION	M.	H/V LOCATION
C267	4030017460	S.CER ECJ0EB1E102K	B	63.9/70.5
C268	4030017640	S.CER ECJ0EC1H150J	B	68.2/69.1
C269	4030017390	S.CER ECJ0EC1H180J [A]	B	69.7/69.1
	4030017650	S.CER ECJ0EC1H270J [E]		
	4030017650	S.CER ECJ0EC1H270J [C]		
C270	4030017390	S.CER ECJ0EC1H180J	B	71.2/69
C271	4030017400	S.CER ECJ0EC1H220J [A]	T	74.3/71.7
	4030017390	S.CER ECJ0EC1H180J [E]		
	4030017390	S.CER ECJ0EC1H180J [C]		
C272	4030016930	S.CER ECJ0EB1A104K	T	7.9/39.5
C273	4030016930	S.CER ECJ0EB1A104K	T	9.5/39.5
C274	4030017460	S.CER ECJ0EB1E102K	T	7.4/41.2
C275	4030016930	S.CER ECJ0EB1A104K	T	15/41
C276	4030017620	S.CER ECJ0EC1H100C	B	10.5/41
C277	4030017460	S.CER ECJ0EB1E102K	T	14/41
C278	4030017350	S.CER ECJ0EC1H020B	B	8.9/43.6
C279	4030017460	S.CER ECJ0EB1E102K	B	6.9/44.2
C280	4030017550	S.CER ECJ0EC1H1R5B	B	9.4/46.1
C281	4030017420	S.CER ECJ0EC1H470J	T	97.9/34.2
C282	4030017420	S.CER ECJ0EC1H470J	T	102.1/40
C283	4030017420	S.CER ECJ0EC1H470J	B	97.4/44.6
C284	4030017420	S.CER ECJ0EC1H470J	T	94.8/35.5
C285	4030017420	S.CER ECJ0EC1H470J	B	94.2/44.4
C286	4030017420	S.CER ECJ0EC1H470J	T	92.1/43.3
C287	4030017420	S.CER ECJ0EC1H470J	T	92.1/41.6
C288	4030017460	S.CER ECJ0EB1E102K	B	4.8/46.5
C290	4030017400	S.CER ECJ0EC1H220J	T	74.3/73.6
C291	4030017730	S.CER ECJ0EB1E471K	T	69.3/76.1
C292	4550000560	S.TAN TEESVA 1V 334M8R	T	67.6/74.4
C294	4030017420	S.CER ECJ0EC1H470J	T	70.4/76.1
C295	4030017420	S.CER ECJ0EC1H470J	T	56.7/67.3
C296	4510008530	S.ELE EEE1HA2R2SR	T	59.6/80
C297	4030017460	S.CER ECJ0EB1E102K	T	56.7/68.3
C299	4030017460	S.CER ECJ0EB1E102K	B	6.9/47.9
C300	4030017340	S.CER ECJ0EC1H010B	B	8.9/48.5
C301	4030017580	S.CER ECJ0EC1H060C	B	13.2/49.5
C302	4030017460	S.CER ECJ0EB1E102K	B	4.4/44.4
C303	4030016930	S.CER ECJ0EB1A104K	B	129.6/32
C304	4030017420	S.CER ECJ0EC1H470J	B	90/43.4
C305	4030011140	S.CER GRM31M2C2H120JV01L (GRM42-6 CH)	T	27.6/78.7
C306	4030011120	S.CER GRM31M2C2H100JV01L (GRM42-6 CH)	T	27.6/76.1
C307	4030011120	S.CER GRM31M2C2H100JV01L (GRM42-6 CH)	T	27.7/71.8
C308	4030011070	S.CER GRM31M2C2H5R0CY21L (GRM42-6 CH) [A]	T	27.7/69.2
	4030011140	S.CER GRM31M2C2H120JV01L (GRM42-6 CH) [E]		
	4030011140	S.CER GRM31M2C2H120JV01L (GRM42-6 CH) [C]		
C309	4030017460	S.CER ECJ0EB1E102K	T	71.5/76.1
C310	4030017420	S.CER ECJ0EC1H470J	T	43/76.1
C311	4030017460	S.CER ECJ0EB1E102K	T	44.1/76.1
C312	4030017730	S.CER ECJ0EB1E471K	T	45.3/76.1
C313	4510008680	S.ELE EEE1EA220SP	T	51.7/77.7
C314	4030017730	S.CER ECJ0EB1E471K	B	40.2/68.3
C315	4030017460	S.CER ECJ0EB1E102K	T	55.7/73.6
C316	4030016790	S.CER ECJ0EB1C103K	T	54.1/72.6
C317	4030011600	S.CER C1608 JB 1E 104K-T	T	54.1/67
C318	4030017460	S.CER ECJ0EB1E102K [A] only	T	35.1/63.3
C319	4030017460	S.CER ECJ0EB1E102K [A] only	T	47.3/67.4
C320	4030017580	S.CER ECJ0EC1H060C	B	15/52.7
C321	4030017460	S.CER ECJ0EB1E102K	B	14.9/49.5
C322	4030017600	S.CER ECJ0EC1H080C	B	19.3/52
C323	4030017570	S.CER ECJ0EC1H040B	B	20/49.6
C324	4030017420	S.CER ECJ0EC1H470J	B	90/41.8
C325	4030017460	S.CER ECJ0EB1E102K	T	72.5/64.9
C326	4030017420	S.CER ECJ0EC1H470J	B	46.2/64.3
C327	4030017460	S.CER ECJ0EB1E102K	B	84.2/79
C328	4030017460	S.CER ECJ0EB1E102K	B	83.2/79
C329	4030017460	S.CER ECJ0EB1E102K	B	82.1/79
C330	4030017460	S.CER ECJ0EB1E102K	B	81/79
C331	4030017460	S.CER ECJ0EB1E102K	B	80/79
C332	4030016930	S.CER ECJ0EB1A104K	T	51.9/71.9
C334	4030017460	S.CER ECJ0EB1E102K	T	49.5/68.6
C335	4030017460	S.CER ECJ0EB1E102K	T	53.8/63.2
C336	4030017580	S.CER ECJ0EC1H060C	B	20.8/52
C337	4030017390	S.CER ECJ0EC1H180J	B	25.1/51.2
C338	4510008600	S.ELE EEE1CA4R7NR	T	79.1/69.1
C339	4030017460	S.CER ECJ0EB1E102K	T	79.1/62.1
C340	4030017460	S.CER ECJ0EB1E102K	T	37.5/20.8
C341	4030016790	S.CER ECJ0EB1C103K	T	41.9/19.4
C342	4030017200	S.CER GRM31BR32J102KY01L (GHM1030 R)	T	25.3/62.5
C343	4030011270	S.CER GRM31M2C2H200JV01L (GRM42-6 CH)	T	22.1/63.9
C345	4030011170	S.CER GRM31M2C2H180JV01L (GRM42-6 CH)	T	17.3/57.4
C346	4030011170	S.CER GRM31M2C2H180JV01L (GRM42-6 CH)	T	30.2/62.8
C347	4030017520	S.CER ECJ0EC1H0R3B	B	25.4/63
C348	4030017460	S.CER ECJ0EB1E102K	B	31.5/63.4
C349	4030016930	S.CER ECJ0EB1A104K	T	100.5/63.5
C350	4550005980	S.TAN TEESVA 1A 475M8R	T	101.6/62
C351	4030018860	S.CER ECJ0EB0J105K	T	110.6/67.4
C352	4030017460	S.CER ECJ0EB1E102K	B	124.6/59.6
C353	4550005980	S.TAN TEESVA 1A 475M8R	B	124.5/61.3
C354	4550006250	S.TAN TEESVA 1A 106M8R	B	112.9/61.7
C355	4030017420	S.CER ECJ0EC1H470J	B	112.6/60.1
C356	4030011270	S.CER GRM31M2C2H200JV01L (GRM42-6 CH)	T	14.7/62.9
C357	4030011270	S.CER GRM31M2C2H200JV01L (GRM42-6 CH)	T	10.4/62.9

M.=Mounted side (T: Mounted on the Top side, B: Mounted on the Bottom side)
S.=Surface mount

[MAIN UNIT] (Other than "MDC compatible")

REF NO.	PARTS NO.	DESCRIPTION		M.	H/V LOCATION
C358	4030007030	S.CER	C1608 CH 1H 150J-T	B	10.6/56.4
C359	4030011340	S.CER	C1608 CH 1H 471J-T	B	9.4/56.4
C360	4030017460	S.CER	ECJ0EB1E102K	B	4/53
C361	4030017460	S.CER	ECJ0EB1E102K	T	103.9/53.5
C362	4030017460	S.CER	ECJ0EB1E102K	T	108.2/24.5
C363	4510008540	S.ELE	EEE1CA100SR	T	139.1/31.9
C365	4550007650	S.TAN	F931V105MAABMA	B	106.7/65
C366	4550007650	S.TAN	F931V105MAABMA	B	104.2/65
C367	4550007650	S.TAN	F931V105MAABMA	B	101.6/65
C368	4550007650	S.TAN	F931V105MAABMA	B	99.5/64.6
C369	4030011270	S.CER	GRM31M2C2H200JV01L (GRM42-6 CH)	T	15.8/78.9
C370	4030011270	S.CER	GRM31M2C2H200JV01L (GRM42-6 CH)	T	15.8/83.1
C371	4030017460	S.CER	ECJ0EB1E102K	B	4.1/81.6
C372	4030006850	S.CER	C1608 JB 1H 471K-T	B	8.3/77.1
C373	4030016930	S.CER	ECJ0EB1A104K	B	130.9/51.7
C374	4030016930	S.CER	ECJ0EB1A104K	B	133/51.3
C375	4030016930	S.CER	ECJ0EB1A104K	B	132.4/54.6
C377	4030017460	S.CER	ECJ0EB1E102K	T	105.9/51.9
C378	4030017460	S.CER	ECJ0EB1E102K	T	108.2/78
C379	4030016930	S.CER	ECJ0EB1A104K	B	108.4/80.3
C380	4030017460	S.CER	ECJ0EB1E102K	B	120.5/83.2
C381	4030016790	S.CER	ECJ0EB1C103K	B	135.9/70.5
C383	4030017460	S.CER	ECJ0EB1E102K	B	135.9/71.5
C384	4510008870	S.ELE	EEE1AA471UP	T	129.9/64.9
C386	4030016930	S.CER	ECJ0EB1A104K	B	138.8/53.7
C387	4030017720	S.CER	ECJ0EB1H331K	B	135.4/51.3
C388	4030018860	S.CER	ECJ0EB0J105K	B	138.6/52.2
C389	4030016930	S.CER	ECJ0EB1A104K	B	139.1/49.4
C390	4030016930	S.CER	ECJ0EB1A104K	B	137.8/55.4
C391	4030016930	S.CER	ECJ0EB1A104K	T	101.8/82.3
C392	4030017460	S.CER	ECJ0EB1E102K	B	127.8/76.8
C393	4030017460	S.CER	ECJ0EB1E102K	B	99/79
C394	4030017420	S.CER	ECJ0EC1H470J	B	115.4/68
C395	4030017460	S.CER	ECJ0EB1E102K	B	126.5/77.1
C397	4030017460	S.CER	ECJ0EB1E102K	B	99.8/86.3
C398	4030017420	S.CER	ECJ0EC1H470J	B	100.8/86.3
C399	4030018860	S.CER	ECJ0EB0J105K	B	136.3/37.1
C400	4030016930	S.CER	ECJ0EB1A104K	B	139.7/35.3
C411	4510008780	S.ELE	EEE1EA471P	T	117.2/63.6
C412	4510008780	S.ELE	EEE1EA471P	T	132.7/54.3
C413	4030018900	S.CER	ECJ0EB0J474K	B	135.1/46.8
C414	4510008540	S.ELE	EEE1CA100SR	T	118.7/50.5
C415	4030016930	S.CER	ECJ0EB1A104K	B	103/23.8
C416	4030016930	S.CER	ECJ0EB1A104K	B	120.3/51.6
C417	4030016790	S.CER	ECJ0EB1C103K	B	115.6/52.8
C418	4030017460	S.CER	ECJ0EB1E102K	T	109.6/54.5
C419	4030016790	S.CER	ECJ0EB1C103K	T	42.9/39.2
C420	4030017500	S.CER	ECJ0EC1H560J	T	41/37.4
C421	4030016930	S.CER	ECJ0EB1A104K	B	36/24.7
C422	4030016790	S.CER	ECJ0EB1C103K	T	43.1/31.9
C423	4030018010	S.CER	ECJ0EC1H360J	T	39.9/35.3
C424	4030016930	S.CER	ECJ0EB1A104K	T	38.9/32.2
C425	4030017460	S.CER	ECJ0EB1E102K	B	134.8/66.1
C426	4030018860	S.CER	ECJ0EB0J105K	B	110/12.1
C427	4030017460	S.CER	ECJ0EB1E102K	B	109.1/10.4
C430	4030017570	S.CER	ECJ0EC1H040B	T	78.2/44.8
J1	6510026770	S.CON	AXK540147YG	T	124.5/9.7
J2	6510026770	S.CON	AXK540147YG	T	101.5/9.7
J3	6510021301	S.CON	52365-1071	T	90.3/62.6
J5	6510023092	S.CON	20FLT-SM2-TB(LF)(SN)(M)	T	108.3/81.8
J7	6450000140	CON	HSJ0807-01-010		
J10	6510023092	S.CON	20FLT-SM2-TB(LF)(SN)(M)	T	71/7
W1	7120000470	JUM	ERDS2T0		
W2	8900016250	CAB	OPC-1701 <CMI>T/H!		
EP1	6910015600	S.BEA	ACZ1005Y-241 (240)	B	39.8/8.1
EP2	6910015370	S.BEA	ACZ1005Y-102-T	B	50.1/12.4
EP3	6910015370	S.BEA	ACZ1005Y-102-T	T	82.6/37.1
EP4	6910010280	BEA	HF70BB9.5X10.4X4.9		
EP5	6910010280	BEA	HF70BB9.5X10.4X4.9		
EP6	6910011560	BEA	HF70BB4.5X5X1.6		
EP7	0910061244	PCB	B 6617D MA FX-2979		

[FRONT UNIT]

REF NO.	PARTS NO.	DESCRIPTION		M.	H/V LOCATION
IC501	1130009121	S.IC	S1D15206F00A200	B	33.1/19.5
IC502	1110005771	S.IC	S-80942CNMC-G9CT2G	B	61.4/9.7
IC503	1140010771	S.IC	HD64F3687FPV(EMPTY)	B	62.1/25.2
IC504	1130007111	S.IC	TC7W04FU(TE12L,F)	B	73.9/26.3
IC505	1110005310	S.IC	AN6123MS	B	10/8.4
IC506	1110005350	S.IC	NJM2870F05-TE1-#FZZB	B	84.9/9.9
IC507	1130006221	S.IC	TC4W53FU(TE12L,F)	B	6.5/19
IC508	1130008561	S.IC	TC75S51F(TE85L,F)	B	74/11.3
Q501	1590001050	S.TRA	DTC114TUA T106	B	15.1/32.9
Q502	1590001050	S.TRA	DTC114TUA T106	B	18/32.9
Q503	1590001330	S.TRA	DTA114EUA T106	B	77/24.7
Q504	1530002851	S.TRA	2SC4116-BL(TE85R,F)	B	91.5/22.4
Q505	1590001050	S.TRA	DTC114TUA T106	B	92.5/18.8
Q506	1590000680	S.TRA	DTC114EUA T106	B	77/27.4
Q507	1590001050	S.TRA	DTC114TUA T106	B	51.4/30.2
D501	1750000370	S.DIO	DA221 TL	T	3.5/27.1
D502	1750000370	S.DIO	DA221 TL	T	3.5/25
D503	1750000370	S.DIO	DA221 TL	T	3.5/22.9
D504	1790001261	S.DIO	MA2S077G0L	B	50.9/23.1
D505	1790001251	S.DIO	MA2S1110GL	B	3.3/23.3
D506	1790001251	S.DIO	MA2S1110GL	B	82.1/21.7
D507	1790001251	S.DIO	MA2S1110GL	B	79.7/25.8
D508	1790000951	S.ZEN	MAZ8056GML	T	4.8/19.7
D509	1790000951	S.ZEN	MAZ8056GML	T	8.6/19.7
D510	1790000951	S.ZEN	MAZ8056GML	T	10.4/19.7
X501	6050011720	S.XTA	CR-764 SMD-49TB 19.6608 MHz <KDS>	B	49.6/18.9
L501	6200003640	S.COI	MLF1608E 100K-T	B	12/19.1
R501	7030003810	S.RES	ERJ3GEYJ 125 V (1.2M)	B	46/28.8
R502	7030003810	S.RES	ERJ3GEYJ 125 V (1.2M)	B	46.6/23.8
R503	7310005510	S.TRI	TMC3ADCS5X (470K)	B	45.5/26.3
R504	7030005120	S.RES	ERJ2GEJ 102 X (1K)	B	8/29.3
R505	7030005120	S.RES	ERJ2GEJ 102 X (1K)	B	10/29.3
R506	7030005120	S.RES	ERJ2GEJ 102 X (1K)	B	12/29.3
R507	7030005010	S.RES	ERJ2GEJ 681 X (680)	T	14.3/37.2
R508	7030005120	S.RES	ERJ2GEJ 102 X (1K)	T	14.3/36.3
R509	7510001730	S.THE	ERTJOEP 473J	B	59.9/17.1
R510	7030005120	S.RES	ERJ2GEJ 102 X (1K)	B	61.1/17.1
R511	7030005530	S.RES	ERJ2GEJ 100 X (10)	B	57.1/19.4
R512	7030008010	S.RES	ERJ2GEJ 123 X (12K)	B	52/22.7
R513	7030005050	S.RES	ERJ2GEJ 103 X (10K)	B	63.8/10.2
R514	7030005160	S.RES	ERJ2GEJ 105 X (1M)	B	56.1/20.7
R515	7030008010	S.RES	ERJ2GEJ 123 X (12K)	B	52.3/23.9
R516	7030008010	S.RES	ERJ2GEJ 123 X (12K)	B	49.5/23.9
R517	7410001140	S.ARR	EXB28V104JX	B	66.5/10.8
R518	7410001140	S.ARR	EXB28V104JX	B	67.5/19.2
R519	7030005090	S.RES	ERJ2GEJ 104 X (100K)	B	51.5/26.9
R520	7030005090	S.RES	ERJ2GEJ 104 X (100K)	B	71.6/26.8
R522	7030005090	S.RES	ERJ2GEJ 104 X (100K)	T	3.3/17.2
R523	7030004980	S.RES	ERJ2GEJ 101 X (100)	B	13.2/10.9
R524	7030005090	S.RES	ERJ2GEJ 104 X (100K)	B	71.6/28.4
R525	7030005240	S.RES	ERJ2GEJ 473 X (47K)	B	80.2/27
R526	7030007300	S.RES	ERJ2GEJ 332 X (3.3K)	B	79/24.4
R528	7030005090	S.RES	ERJ2GEJ 104 X (100K)	B	71.7/24.1
R529	7030005090	S.RES	ERJ2GEJ 104 X (100K)	B	82.1/19.6
R530	7030005160	S.RES	ERJ2GEJ 105 X (1M)	B	5.4/10
R531	7030009280	S.RES	ERJ2GEJ 391 X	B	92/20.6
R532	7030005120	S.RES	ERJ2GEJ 102 X (1K)	B	91.4/24.2
R533	7030007290	S.RES	ERJ2GEJ 222 X (2.2K)	B	91.4/25.2
R534	7030009140	S.RES	ERJ2GEJ 272 X (2.7K)	B	90.6/20.2
R535	7030005090	S.RES	ERJ2GEJ 104 X (100K)	B	82.4/31.4
R536	7030005220	S.RES	ERJ2GEJ 223 X (22K)	B	77.8/22.9
R537	7030005090	S.RES	ERJ2GEJ 104 X (100K)	T	7.2/19.2
R538	7030005090	S.RES	ERJ2GEJ 104 X (100K)	T	6.2/19.2
R539	7030010040	S.RES	ERJ2GEJ-JPW	B	76/15.9
R540	7030009290	S.RES	ERJ2GEJ 562 X (5.6K)	B	4.3/10.9
R541	7030007290	S.RES	ERJ2GEJ 222 X (2.2K)	B	3.3/16.6
R542	7030009160	S.RES	ERJ2GEJ 181 X (180)	B	89.8/24.2
R543	7030009160	S.RES	ERJ2GEJ 181 X (180)	B	89.8/25.2
R545	7030005240	S.RES	ERJ2GEJ 473 X (47K)	T	11.8/19.2
R546	7210003050	VAR	EVU-F2KFK3 B14 (10KB)		
R547	7030005120	S.RES	ERJ2GEJ 102 X (1K)	T	11.8/17.2
R548	7030005120	S.RES	ERJ2GEJ 102 X (1K)	T	6.8/17.2
R549	7030005120	S.RES	ERJ2GEJ 102 X (1K)	T	9.3/17.2
R550	7030005240	S.RES	ERJ2GEJ 473 X (47K)	B	10.9/19.4
R551	7030007300	S.RES	ERJ2GEJ 332 X (3.3K)	B	11/5.8
R552	7030009280	S.RES	ERJ2GEJ 391 X	B	10.1/5.8
R553	7030007290	S.RES	ERJ2GEJ 222 X (2.2K)	B	75.2/8.7
R554	7030007290	S.RES	ERJ2GEJ 222 X (2.2K) [A]	B	71.4/12.4
	7030007290	S.RES	ERJ2GEJ 222 X (2.2K) [E]		
	7030007290	S.RES	ERJ2GEJ 222 X (2.2K) [C]		
	7030009140	S.RES	ERJ2GEJ 272 X (2.7K) [B]		
	7030009140	S.RES	ERJ2GEJ 272 X (2.7K) [F]		
	7030009140	S.RES	ERJ2GEJ 272 X (2.7K) [D]		
	7030009140	S.RES	ERJ2GEJ 272 X (2.7K) [G]		
	7030009140	S.RES	ERJ2GEJ 272 X (2.7K) [J]		
	7030009140	S.RES	ERJ2GEJ 272 X (2.7K) [H]		
	7030009140	S.RES	ERJ2GEJ 272 X (2.7K) [I]		

M.=Mounted side (T: Mounted on the Top side, B: Mounted on the Bottom side)
S.=Surface mount

[FRONT UNIT]

REF NO.	PARTS NO.	DESCRIPTION			M.	H/V LOCATION
R555	7030005220	S.RES	ERJ2GEJ 223 X (22K)	[A]	B	71.4/11.5
	7030005220	S.RES	ERJ2GEJ 223 X (22K)	[E]		
	7030005220	S.RES	ERJ2GEJ 223 X (22K)	[C]		
	7030008290	S.RES	ERJ2GEJ 183 X (18K)	[B]		
	7030008290	S.RES	ERJ2GEJ 183 X (18K)	[F]		
	7030008290	S.RES	ERJ2GEJ 183 X (18K)	[D]		
	7030008290	S.RES	ERJ2GEJ 183 X (18K)	[G]		
	7030008290	S.RES	ERJ2GEJ 183 X (18K)	[J]		
	7030008290	S.RES	ERJ2GEJ 183 X (18K)	[H]		
	7030008290	S.RES	ERJ2GEJ 183 X (18K)	[I]		
R556	7030005050	S.RES	ERJ2GEJ 103 X (10K)		B	73.2/8.7
R557	7030005050	S.RES	ERJ2GEJ 103 X (10K)		B	71.8/10.2
R558	7030005060	S.RES	ERJ2GEJ 333 X (33K)	[A]	B	74/13.5
	7030005060	S.RES	ERJ2GEJ 333 X (33K)	[E]		
	7030005060	S.RES	ERJ2GEJ 333 X (33K)	[C]		
	7030008010	S.RES	ERJ2GEJ 123 X (12K)	[B]		
	7030008010	S.RES	ERJ2GEJ 123 X (12K)	[F]		
	7030008010	S.RES	ERJ2GEJ 123 X (12K)	[D]		
	7030008010	S.RES	ERJ2GEJ 123 X (12K)	[G]		
	7030008010	S.RES	ERJ2GEJ 123 X (12K)	[J]		
	7030008010	S.RES	ERJ2GEJ 123 X (12K)	[H]		
	7030008010	S.RES	ERJ2GEJ 123 X (12K)	[I]		
R559	7030005090	S.RES	ERJ2GEJ 104 X (100K)		B	11/20.8
R560	7030005090	S.RES	ERJ2GEJ 104 X (100K)		T	6.2/20.8
C501	4030016930	S.CER	ECJ0EB1A104K		B	41.8/30.2
C502	4030016930	S.CER	ECJ0EB1A104K		B	40.9/30.2
C503	4030016930	S.CER	ECJ0EB1A104K		B	42.7/30.2
C504	4030016930	S.CER	ECJ0EB1A104K		B	43.6/30.2
C505	4030016930	S.CER	ECJ0EB1A104K		B	44.5/30.2
C506	4030017490	S.CER	C1608 JB 1A 105K-T		B	44.7/23.2
C507	4030017460	S.CER	ECJ0EB1E102K		B	46.1/22.7
C508	4030017490	S.CER	C1608 JB 1A 105K-T		B	43.4/23.2
C509	4030017730	S.CER	ECJ0EB1E471K		B	13.1/33.3
C510	4030017730	S.CER	ECJ0EB1E471K		B	18.6/30.5
C511	4030016790	S.CER	ECJ0EB1C103K		B	58.3/17.1
C512	4030016930	S.CER	ECJ0EB1A104K		B	62/17.1
C513	4030017030	S.CER	ECJ0EB1A273K		B	59.1/10.2
C514	4030016930	S.CER	ECJ0EB1A104K		B	58.3/18.3
C515	4030017630	S.CER	ECJ0EC1H120J		B	57.1/17.8
C516	4030017580	S.CER	ECJ0EC1H060C		B	48.9/22.7
C517	4030016790	S.CER	ECJ0EB1C103K		B	52.9/22.7
C518	4030017640	S.CER	ECJ0EC1H150J		B	49.8/22.7
C519	4030016930	S.CER	ECJ0EB1A104K		B	53.8/22.7
C520	4030017420	S.CER	ECJ0EC1H470J		T	12.5/36.3
C521	4030017460	S.CER	ECJ0EB1E102K		B	78.8/27.5
C522	4550006480	S.TAN	TEESVA 1C 475M8R		B	87.7/9.8
C523	4550006250	S.TAN	TEESVA 1A 106M8R		B	12.8/7.6
C524	4550006250	S.TAN	TEESVA 1A 106M8R		B	7.2/7.6
C525	4030017330	S.CER	ECJ0EF1C104Z		B	85.7/7.7
C526	4030016790	S.CER	ECJ0EB1C103K		B	84.1/7.7
C527	4030017420	S.CER	ECJ0EC1H470J		T	5.9/17.2
C528	4030017460	S.CER	ECJ0EB1E102K		T	8.4/17.2
C529	4550006250	S.TAN	TEESVA 1A 106M8R		B	82.1/9.8
C530	4030016930	S.CER	ECJ0EB1A104K		B	84.1/12.1
C531	4030017460	S.CER	ECJ0EB1E102K		B	79/22.5
C533	4030017460	S.CER	ECJ0EB1E102K		B	80/22.5
C534	4030017420	S.CER	ECJ0EC1H470J		B	76.2/22.9
C535	4030016930	S.CER	ECJ0EB1A104K		B	5.4/9.1
C536	4030016930	S.CER	ECJ0EB1A104K		B	3.3/18.2
C537	4030017460	S.CER	ECJ0EB1E102K		B	14/25
C538	4030017330	S.CER	ECJ0EF1C104Z		B	6/10.9
C539	4030017420	S.CER	ECJ0EC1H470J		T	10.9/17.2
C540	4030017460	S.CER	ECJ0EB1E102K		B	10.9/17.8
C541	4030017420	S.CER	ECJ0EC1H470J		B	8.5/10.9
C543	4030017420	S.CER	ECJ0EC1H470J		B	77.6/16.7
C544	4030017420	S.CER	ECJ0EC1H470J		B	79.8/16.7
C545	4030017420	S.CER	ECJ0EC1H470J		B	77.6/15.8
C546	4030017420	S.CER	ECJ0EC1H470J		B	74/15.3
C547	4030017460	S.CER	ECJ0EB1E102K		B	74/16.2
C548	4030017490	S.CER	C1608 JB 1A 105K-T		B	9.7/19.3
C549	4030016930	S.CER	ECJ0EB1A104K		B	3.7/21.2
C550	4030018900	S.CER	ECJ0EB0J474K		B	70.1/11.9
C551	4030016930	S.CER	ECJ0EB1A104K		B	70.9/10.2
C552	4030017460	S.CER	ECJ0EB1E102K		B	75.2/6.9
C553	4030017460	S.CER	ECJ0EB1E102K		B	71.4/13.3
C554	4030016790	S.CER	ECJ0EB1C103K		B	74.2/8.7
C555	4030017460	S.CER	ECJ0EB1E102K	[A]	B	74/14.4
	4030017460	S.CER	ECJ0EB1E102K	[E]		
	4030017460	S.CER	ECJ0EB1E102K	[C]		
	4030018920	S.CER	ECJ0EB1H392K	[B]		
	4030018920	S.CER	ECJ0EB1H392K	[F]		
	4030018920	S.CER	ECJ0EB1H392K	[D]		
	4030018920	S.CER	ECJ0EB1H392K	[G]		
	4030018920	S.CER	ECJ0EB1H392K	[J]		
	4030018920	S.CER	ECJ0EB1H392K	[H]		
	4030018920	S.CER	ECJ0EB1H392K	[I]		
C556	4550006480	S.TAN	TEESVA 1C 475M8R		B	76.9/10.2
J501	6510022022	S.CON	14FLT-SM2-TB(LF)(SN)(M)		B	88/28.5
J502	6510023092	S.CON	20FLT-SM2-TB(LF)(SN)(M)		B	75.5/19.5
J503	6450002210	CON	3017-8821 <KIN>			
DS501	5030003020	LCD	L6-0226TVM-3			
DS502	5040002670	S.LED	CL-165HR/YG		T	18.2/35.9
DS503	5040002310	S.LED	SML-311YTT86		T	32.8/6.5
DS504	5040002310	S.LED	SML-311YTT86		T	46.1/6.3
DS505	5040002310	S.LED	SML-311YTT86		T	59.8/6.3
DS506	5040002310	S.LED	SML-311YTT86		T	92.3/24.5
DS507	5040002310	S.LED	SML-311YTT86		T	73.1/6.5
DS508	5040002310	S.LED	SML-311YTT86		T	31.7/26
DS509	5040002310	S.LED	SML-311YTT86		T	40.2/26

[FRONT UNIT]

REF NO.	PARTS NO.	DESCRIPTION		M.	H/V LOCATION
DS510	5040002310	S.LED	SML-311YTT86	T	48.7/26
DS511	5040002310	S.LED	SML-311YTT86	T	74.2/26
DS512	5040002310	S.LED	SML-311YTT86	T	65.7/26
DS513	5040002310	S.LED	SML-311YTT86	T	57.2/26
SP501	2510001400	SPE	3050S-E6227 <PRI>		
W501	8900012711	CAB	OPC-1297A (P0.5,N20,L62) <TJM>		
W502	7120000470	JUM	ERDS2T0		
W503	7120000470	JUM	ERDS2T0		
EP502	8930072220	LCD	SRCN-2979-SP-N-W (SHJ)		

M.=Mounted side (T: Mounted on the Top side, B: Mounted on the Bottom side)
S.=Surface mount

[CONNECT UNIT]

REF NO.	PARTS NO.	DESCRIPTION	M.	H/V LOCATION
C601	4030017420	S.CER ECJ0EC1H470J	T	12.7/4.6
C602	4030017420	S.CER ECJ0EC1H470J	T	15.4/4.6
C603	4030017420	S.CER ECJ0EC1H470J	T	18.2/4.6
C604	4030017420	S.CER ECJ0EC1H470J	T	19.6/4.6
C605	4030017420	S.CER ECJ0EC1H470J	T	20.9/4.6
C606	4030017420	S.CER ECJ0EC1H470J	T	25.1/4.6
C607	4030017420	S.CER ECJ0EC1H470J	T	37.5/13.2
C608	4030017420	S.CER ECJ0EC1H470J	T	16.8/4.6
C609	4030017420	S.CER ECJ0EC1H470J	T	40.3/13.2
C610	4030017420	S.CER ECJ0EC1H470J	T	41.7/4.6
J601	6510025240	S.CON IMSA-9631S-20Y912	B	32.2/16.2
J602	6510023210	CON CD6125SA1J0 <CVI>		
W601	8900012711	CAB OPC-1297A (P0.5,N20,L62) <TJM>		

[MAIN-A UNIT] (MDC compatible)

REF NO.	PARTS NO.	DESCRIPTION	M.	H/V LOCATION
IC1	1110005340	S.IC NJM12902V-TE1-#ZZZB	T	82.3/12.9
IC2	1110006221	S.IC AK2346P-E2/P	B	44.7/11.7
IC3	1140013200	S.IC CD4053BPWR	B	58.7/9.3
IC4	1130010100	S.IC LMX2352TMX/NOPB	T	82.9/46
IC5	1110003491	S.IC TA31136FNG(D,EL)	T	28/13.9
IC6	1190001350	S.IC M62364FP 600D	B	84.9/12.9
IC7	1110005340	S.IC NJM12902V-TE1-#ZZZB	T	108.5/43.7
IC8	1140013200	S.IC CD4053BPWR	B	58.7/16.1
IC9	1130012960	S.IC BU8872FS-E2	B	133.1/21.3
IC10	1190002051	S.IC SPM5001-TL-E	B	33.8/36.9
IC12	1190001340	S.IC M62334FP 600C	B	9.1/25.7
IC13	1110005771	S.IC S-80942CNMC-G9CT2G	B	126/44.8
IC14	1140014550	S.IC HD64F2506RFC26DV(EMPTY)	B	111.8/35.7
IC15	1150002073	IC RA60H1317M-125 [B]		
	1150002042	IC RA30H1317M-121 [F]		
	1150002042	IC RA30H1317M-121 [D]		
	1150002073	IC RA60H1317M-125 [G]		
	1150002042	IC RA30H1317M-121 [J]		
	1150002073	IC RA60H1317M-125 [H]		
	1150002073	IC RA60H1317M-125 [I]		
IC16	1140014160	S.IC 24LC1025T-I/SM	B	133.3/29
IC17	1110002751	S.IC TA75S01F(TE85R,F)	T	54.1/70.4
IC18	1180000970	S.IC AN78L05M-(E1)	B	113/65.3
IC19	1120002510	S.IC DS14C232TM S	T	104.7/70.5
IC20	1180001251	S.IC TA7808F(TE16L,Q)	B	121.5/65.8
IC21	1110003091	IC LA4425A-E		
IC22	1110002751	S.IC TA75S01F(TE85R,F)	B	135.5/54.4
IC23	1130006221	S.IC TC4W53FU(TE12L,F)	B	106.9/9.6
IC25	1110006230	S.IC NJM2711F-TE1-#ZZZB	B	26.1/6.6
Q1	1590003231	S.TRA UNR9113G0L	B	15.2/6
Q3	1530002851	S.TRA 2SC4116-BL(TE85R,F)	B	36.4/15.5
Q4	1590001650	S.TRA XP4601(TX)	B	92.8/12.4
Q5	1590003291	S.TRA UNR9213G0L	B	76.7/50
Q6	1530002851	S.TRA 2SC4116-BL(TE85R,F)	T	63.2/55.1
Q7	1560000541	S.FET 2SK880-Y(T5RICOM,F)	B	81.2/27.1
Q8	1530002851	S.TRA 2SC4116-BL(TE85R,F)	B	79.2/31.8
Q9	1530002851	S.TRA 2SC4116-BL(TE85R,F)	B	81.7/31.8
Q10	1560001360	S.FET 2SK3019 TL	B	57/31.6
Q12	1530002601	S.TRA 2SC4215-O(TE85R,F)	T	26.9/20
Q16	1590003291	S.TRA UNR9213G0L	T	113.2/47.6
Q17	1530002920	S.TRA 2SC4226-T1 R25	T	50.9/47.6
Q18	1530002920	S.TRA 2SC4226-T1 R25	T	61.6/42.6
Q19	1530002920	S.TRA 2SC4226-T1 R25	T	72.1/43
Q20	1590003231	S.TRA UNR9113G0L	B	33.9/25.2
Q22	1530003311	S.TRA 2SC5107-O(TE85R,F)	T	58.1/46.3
Q23	1590001400	S.TRA XP1214(TX)	B	55.7/40.9
Q24	1590003281	S.TRA UNR9211G0L	B	55.8/38.2
Q25	1530003311	S.TRA 2SC5107-O(TE85R,F)	B	65.9/49.5
Q26	1590001400	S.TRA XP1214(TX)	B	67.2/43.1
Q27	1590003231	S.TRA UNR9113G0L	T	124.7/52
Q28	1590003291	S.TRA UNR9213G0L	B	123.4/46.3
Q29	1530003311	S.TRA 2SC5107-O(TE85R,F)	B	53.5/51.2
Q30	1530000372	S.TRA 2SC3356-T1B R (R24)	B	65.5/66
Q31	1580000731	S.FET 3SK293(TE85L,F)	B	10.2/38.6
Q32	1560000841	S.FET 2SK1829(TE85R,F)	T	11/42.5
Q33	1530002851	S.TRA 2SC4116-BL(TE85R,F) [B]	T	47.5/69.4
	1530002851	S.TRA 2SC4116-BL(TE85R,F) [G]		
	1530002851	S.TRA 2SC4116-BL(TE85R,F) [H]		
	1530002851	S.TRA 2SC4116-BL(TE85R,F) [I]		
Q34	1590003291	S.TRA UNR9213G0L	T	83/67.4
Q35	1520000460	S.TRA 2SB1132 T100 R	T	100.1/57.9
Q36	1590001190	S.TRA XP6501-(TX).AB	T	104.3/55.8
Q37	1540000550	S.TRA 2SD1664 T100Q	T	75.5/63.6
Q38	1510000920	S.TRA 2SA1577 T106 Q	T	39.3/21.3
Q39	1590003291	S.TRA UNR9213G0L	T	42.6/21.3
Q40	1590003291	S.TRA UNR9213G0L	T	104.1/51.9
Q41	1590001451	S.FET 2SJ144-GR (TE85R,F)	B	110.3/83.3
Q42	1590003291	S.TRA UNR9213G0L	B	132.1/45
Q43	1590000990	S.TRA DTC363EK T146	B	135.7/49
Q44	1590003291	S.TRA UNR9213G0L	T	108.5/21.6
Q45	1590003291	S.TRA UNR9213G0L	B	133.3/58.9
Q46	1590003291	S.TRA UNR9213G0L	T	117.9/84.4
Q47	1550000100	S.FET 2SJ377 (TE16L1,NQ)	B	131.3/71.5
Q48	1590003291	S.TRA UNR9213G0L	B	127.4/78
Q49	1530002851	S.TRA 2SC4116-BL(TE85R,F)	B	139.3/37.2
Q50	1530002601	S.TRA 2SC4215-O(TE85R,F)	T	40.6/39.2
Q51	1590003321	S.FET TPC6103(TE85L,F)	B	133.6/63.4
Q52	1590003291	S.TRA UNR9213G0L	B	128.2/61.1
Q53	1590000430	S.TRA DTC144EUA T106	B	52.3/67.4
Q54	1590000430	S.TRA DTC144EUA T106	T	25.5/6.3
Q55	1560001360	S.FET 2SK3019 TL	T	75.5/20.9
Q57	1590003291	S.TRA UNR9213G0L	T	112/14.4
Q58	1530002851	S.TRA 2SC4116-BL(TE85R,F)	B	24.9/9.5
Q59	1590003291	S.TRA UNR9213G0L	B	96.6/8
Q60	1590003291	S.TRA UNR9213G0L	B	97.8/11.6
D1	1750001070	S.DIO DAN235ETL	T	10.4/15.7
D2	1750001070	S.DIO DAN235ETL	T	22.6/8.9
D3	1790001251	S.DIO MA2S1110GL	T	61.3/55
D4	1790001261	S.DIO MA2S077G0L	B	72.9/49.8
D5	1790001261	S.DIO MA2S077G0L	B	71.1/51.3
D6	1750001070	S.DIO DAN235ETL	T	30.6/20.8
D7	1160000140	S.DIO DAP222 TL	T	58.9/14
D8	1720000791	S.VAR HVC321B1TRF-E	T	49.5/32.4
D9	1720000791	S.VAR HVC321B1TRF-E	T	52.7/32.4
D10	1720000791	S.VAR HVC321B1TRF-E	T	60.5/30
D11	1720000641	S.VAR 1SV284(TPH3,F)	T	52.7/33.6
D12	1720000641	S.VAR 1SV284(TPH3,F)	T	52.7/34.8
D13	1720000791	S.VAR HVC321B1TRF-E	T	63.8/28.6
D14	1720000791	S.VAR HVC321B1TRF-E	T	73.6/30.4
D15	1720000641	S.VAR 1SV284(TPH3,F)	T	63.8/31.3
D17	1720000791	S.VAR HVC321B1TRF-E	T	72.1/27.9

M.=Mounted side (T: Mounted on the Top side, B: Mounted on the Bottom side)
S.=Surface mount

[MAIN-A UNIT] (MDC compatible)

REF NO.	PARTS NO.	DESCRIPTION	M.	H/V LOCATION
D18	1750000721	S.VAR HVC375BTRF-E	T	69.8/33.3
D19	1160000140	S.DIO DAP222 TL	B	120.5/17.8
D20	1720000471	S.VAR 1SV239(TPH3,F)	T	69.4/34.9
D21	1750001070	S.DIO DAN235ETL	T	36.3/38.3
D22	1750000520	S.DIO DAN222TL	T	124.7/54.5
D23	1790001261	S.DIO MA2S077G0L	T	125.6/39.2
D24	1790001261	S.DIO MA2S077G0L	B	50.7/53.2
D25	1790001261	S.DIO MA2S077G0L	B	49.3/50.8
D26	1750000711	S.VAR HVC350BTRF-E	B	17.7/36
D27	1750000711	S.VAR HVC350BTRF-E	B	16.2/36
D30	1750000721	S.VAR HVC375BTRF-E	B	8.6/44.7
D31	1790001251	S.DIO MA2S1110GL	T	8.5/43.7
D32	1750001080	S.DIO RB886G T2R	T	64.1/76.5
D33	1750001080	S.DIO RB886G T2R	T	65.8/75.8
D34	1750000721	S.VAR HVC375BTRF-E	B	8.6/47.4
D35	1790001261	S.DIO MA2S077G0L	B	17.9/48.1
D37	1750000370	S.DIO DA221 TL	T	75.5/67.6
D38	1750000511	S.DIO UX9401F-STD/TR <INT> [F]	T	30/66
	1750000511	S.DIO UX9401F-STD/TR <INT> [D]		
	1750000511	S.DIO UX9401F-STD/TR <INT> [J]		
D39	1710001061	DIO L407CDB [B]		
	1710001061	DIO L407CDB [G]		
	1710001061	DIO L407CDB [H]		
	1710001061	DIO L407CDB [I]		
D42	1750001360	S.DIO L709CER (9401)	T	34.6/58.7
D45	1750000520	S.DIO DAN222TL	T	91.8/57.5
D46	1750000520	S.DIO DAN222TL	T	89.6/57.5
D47	1790001211	S.DIO 1SS375-TL-E	B	29.2/63.8
D48	1750000520	S.DIO DAN222TL	B	93/61.5
D49	1790001211	S.DIO 1SS375-TL-E	B	6/52.8
D50	1750000370	S.DIO DA221 TL	B	97.2/65.8
D51	1790001211	S.DIO 1SS375-TL-E	B	3.9/79.7
D52	1750000520	S.DIO DAN222TL	B	132.5/41
D53	1790001251	S.DIO MA2S1110GL	B	133.3/47.3
D55	1750000370	S.DIO DA221 TL	B	108.8/57.4
D56	1750000370	S.DIO DA221 TL	T	108.8/60.6
D57	1750000370	S.DIO DA221 TL	B	95.1/65.8
D58	1750000520	S.DIO DAN222TL	T	94/57.5
D59	1750000520	S.DIO DAN222TL	B	104/80.4
D62	1790000700	DIO DSA3A1		
D63	1750000520	S.DIO DAN222TL	B	110.3/80.9
D65	1750000520	S.DIO DAN222TL	B	129.7/58.9
D66	1790001621	S.DIO 1SV308(TPL3,F)	T	33.9/38.8
D67	1790001621	S.DIO 1SV308(TPL3,F)	T	33.9/37.5
D68	1790001621	S.DIO 1SV308(TPL3,F)	T	29.9/23.2
D69	1790001621	S.DIO 1SV308(TPL3,F)	T	31.2/23.2
D70	1750000351	S.DIO 1SV252(TE85L,F)	T	73.6/75.5
D71	1730002411	S.ZEN MAZ8200GHL	T	118.3/86.3
D72	1750000520	S.DIO DAN222TL	T	87.4/57.5
D73	1750000520	S.DIO DAN222TL	B	93/64.5
FI1	2020001410	CER CFWLB450KGFA-B0 (CFWM450G)		
FI2	2020002470	S.CER CFWKA450KHFA001-R0	T	15.4/9.3
FI3	2030000500	S.MON DSF753SBF 46.35 MHz (FL-401)	T	24.7/28.4
FI4	2030000670	S.MON DSF753SBF 46.35 MHz (FL-420)	T	35.6/28.4
FI5	2040001440	S.LC NFE31PT152Z1E9L (NFM60R20T152)	B	94.5/77
FI6	2040001440	S.LC NFE31PT152Z1E9L (NFM60R20T152)	B	94.5/73.7
FI7	2040001440	S.LC NFE31PT152Z1E9L (NFM60R20T152) [B]	B	94.5/70.3
	2040001440	S.LC NFE31PT152Z1E9L (NFM60R20T152) [G]		
	2040001440	S.LC NFE31PT152Z1E9L (NFM60R20T152) [H]		
	2040001440	S.LC NFE31PT152Z1E9L (NFM60R20T152) [I]		
X1	6050012380	S.XTA CR-826 DSA535SD 15.3 MHz	T	84.2/34.7
X2	6050011730	S.XTA CR-765 SMD-49TA 3.6864 MHz <KDS>	T	48.3/11.6
X3	6070000300	S.DIS JTBM450CX24 <JJE>	T	37.1/10.3
X4	6050012320	S.XTA CR-818 SMD-49 4.194304 MHz <KDS>	T	139.1/21.9
X5	6050011720	S.XTA CR-764 SMD-49TB 19.6608 MHz <KDS>	T	120.5/44.3
L1	6200004660	S.COI MLF1608A 1R8K-T	T	82.7/54.3
L2	6200003540	S.COI MLF1608D R22K-T	B	34.4/14.7
L3	6200004480	S.COI MLF1608D R82K-T	B	29.7/16.2
L4	6200007911	S.COI ELJRF 18NJFB	B	75.9/48.3
L5	6200007120	S.COI ELJND 1R0J	T	49.4/30.8
L6	6200007120	S.COI ELJND 1R0J	T	52.7/30.8
L7	6200007120	S.COI ELJND 1R0J	T	60.5/28.4
L8	6200007170	S.COI MLF1608A 3R3K-T	T	74/27.5
L9	6200007170	S.COI MLF1608A 3R3K-T	T	69.8/32
L10	6200010600	S.COI C6342A-67NG-A	T	51.2/39.2
L11	6200003640	S.COI MLF1608E 100K-T	T	48.3/33.6
L12	6200009910	S.COI C6342A-88NG-A	T	61.6/35.5
L13	6200007120	S.COI ELJND 1R0J	T	63.8/27
L14	6200003640	S.COI MLF1608E 100K-T	T	60/31.4
L15	6200012450	S.COI 0.25-1.9-8TL 73N (COAT) <COMO>	T	73.3/35.9
L16	6200008090	S.COI LQW2BHN68NJ03L	T	69.5/28
L17	6200003640	S.COI MLF1608E 100K-T	T	73.7/32.6
L18	6130003000	S.COI #617DB-1714=P3	B	39/36.2
L19	6130003000	S.COI #617DB-1714=P3	B	34.5/42.6
L20	6200009181	S.COI ELJRE R10JFA	T	57.3/48.3
L21	6200007911	S.COI ELJRF 18NJFB	B	66.3/51.2
L22	6200005721	S.COI ELJRE 33NGFA	B	40.6/48.1
L23	6200005721	S.COI ELJRE 33NGFA	B	45.5/48.1

[MAIN-A UNIT] (MDC compatible)

REF NO.	PARTS NO.	DESCRIPTION	M.	H/V LOCATION
L24	6130003000	S.COI #617DB-1714=P3	B	27/36.2
L25	6200009151	S.COI ELJRE 82NJFA	B	54.2/53.4
L26	6200010720	S.COI C2520C-56NG-A	B	20.9/37
L27	6200009181	S.COI ELJRE R10JFA	B	66.5/69.4
L28	6200010720	S.COI C2520C-56NG-A	B	11.7/35.1
L29	6200009171	S.COI ELJRE 47NJFA	B	70.5/70.8
L30	6200009171	S.COI ELJRE 47NJFA	T	72.6/72.7
L31	6200011410	S.COI C2520C-82NG-A	B	7.8/41.5
L32	6200011410	S.COI C2520C-82NG-A	B	9.9/50.6
L33	6200010050	S.COI AS080547-47N	T	33.3/73.9
L34	6200007750	S.COI LQW2BHN56NJ03L	B	13.2/51.7
L35	6200006991	S.COI ELJRE 56NGFA	B	20.1/50.7
L36	6200010420	S.COI FHW1210HC 1R0JGT <JJE>	B	39.2/66
L37	6200010050	S.COI AS080547-47N	T	30/58.5
L38	6200010050	S.COI AS080547-47N	T	21.6/58
L39	6200010050	S.COI AS080547-47N	T	12.5/57.5
L40	6200010050	S.COI AS080547-47N	T	10.5/81
L41	6200002861	S.COI NLV25T-4R7J	T	122.3/54.4
L42	6200005011	S.COI NLV25T-100J	T	40.7/42.1
L43	6200010680	S.COI C2520C-R22G-A (0.22U)	T	42.1/34.9
L44	6200010740	S.COI C2520C-R27G-A	T	37.8/35.3
L45	6200003960	S.COI MLF1608A 1R0K-T	T	71.3/72.7
L46	6200005661	S.COI ELJRE 10NGFA	T	78.3/42.3
L47	6200004480	S.COI MLF1608D R82K-T	T	23.3/20.9
L48	6200007750	S.COI LQW2BHN56NJ03L	B	23.9/39.8
L49	6200009571	S.COI ELJRE R12GFA [B]	B	6.6/36.3
	6200009571	S.COI ELJRE R12GFA [G]		
	6200009571	S.COI ELJRE R12GFA [H]		
	6200009571	S.COI ELJRE R12GFA [I]		
R1	7030005060	S.RES ERJ2GEJ 333 X (33K)	B	38.1/5.8
R2	7510001730	S.THE ERTJOEP 473J	T	90.4/35.6
R3	7030005050	S.RES ERJ2GEJ 103 X (10K)	T	79/11.9
R4	7030005700	S.RES ERJ2GEJ 274 X (270K)	B	88.5/18.9
R5	7030005090	S.RES ERJ2GEJ 104 X (100K)	T	90.4/34
R6	7030005160	S.RES ERJ2GEJ 105 X (1M)	T	84/19.4
R7	7030005230	S.RES ERJ2GEJ 334 X (330K)	T	84/17.5
R8	7410001130	S.ARR EXB28V102JX	T	86.1/52.4
R9	7030007570	S.RES ERJ2GEJ 122 X (1.2K)	B	34.3/11.6
R10	7030007060	S.RES ERJ2GEJ 684X (680K)	B	35.8/13.7
R11	7030010040	S.RES ERJ2GEJ-JPW	T	8.4/9.2
R12	7030004970	S.RES ERJ2GEJ 470 X (47)	T	31/17.2
R13	7030005600	S.RES ERJ2GEJ 273 X (27K)	T	8.8/15.9
R14	7030005210	S.RES ERJ2GEJ 822 X (8.2K)	T	7.5/7.4
R15	7030005070	S.RES ERJ2GEJ 683 X (68K)	B	93.3/14.4
R17	7030007570	S.RES ERJ2GEJ 122 X (1.2K)	B	93.3/15.3
R18	7030008300	S.RES ERJ2GEJ 184 X (180K)	B	79/11.8
R19	7030005230	S.RES ERJ2GEJ 334 X (330K)	T	89.3/9
R20	7030005090	S.RES ERJ2GEJ 104 X (100K)	T	85.6/8.3
R21	7030005070	S.RES ERJ2GEJ 683 X (68K)	T	86.6/8.3
R22	7030005050	S.RES ERJ2GEJ 103 X (10K)	B	38.1/7.5
R23	7030005050	S.RES ERJ2GEJ 103 X (10K)	B	38.1/9.2
R24	7030005060	S.RES ERJ2GEJ 333 X (33K)	B	37.2/10.5
R25	7030005120	S.RES ERJ2GEJ 102 X (1K)	B	100.9/51.4
R26	7030004980	S.RES ERJ2GEJ 101 X (100)	B	87.5/5.3
R27	7030007300	S.RES ERJ2GEJ 332 X (3.3K)	T	53.9/5.6
R28	7030010040	S.RES ERJ2GEJ-JPW	T	59.4/5.6
R29	7030005530	S.RES ERJ2GEJ 100 X (10)	T	116.4/14.5
R30	7030005170	S.RES ERJ2GEJ 474 X (470K)	B	37.2/9.2
R31	7030008410	S.RES ERJ2GEJ 392 X (3.9K)	B	36.3/9.2
R32	7030007340	S.RES ERJ2GEJ 153 X (15K)	B	37.2/7.5
R33	7030005160	S.RES ERJ2GEJ 105 X (1M)	T	80.7/8.4
R34	7030005040	S.RES ERJ2GEJ 472 X (4.7K)	T	80.7/7.2
R35	7030005120	S.RES ERJ2GEJ 102 X (1K)	T	77.6/9.5
R36	7030005030	S.RES ERJ2GEJ 152 X (1.5K)	B	27/14.7
R37	7030007300	S.RES ERJ2GEJ 332 X (3.3K)	B	15.2/8.6
R38	7030005210	S.RES ERJ2GEJ 822 X (8.2K)	T	22.9/6.2
R39	7030005600	S.RES ERJ2GEJ 273 X (27K)	T	24/9.1
R40	7030005170	S.RES ERJ2GEJ 474 X (470K)	T	25.9/10.6
R42	7030005090	S.RES ERJ2GEJ 104 X (100K)	B	94.8/11.7
R43	7030007300	S.RES ERJ2GEJ 332 X (3.3K)	B	94.8/10
R44	7030007340	S.RES ERJ2GEJ 153 X (15K)	B	90.7/11.9
R45	7030005220	S.RES ERJ2GEJ 223 X (22K)	B	92.8/10
R46	7030005040	S.RES ERJ2GEJ 472 X (4.7K)	T	92.1/14.1
R47	7030005050	S.RES ERJ2GEJ 103 X (10K)	T	92.1/13.1
R48	7030005060	S.RES ERJ2GEJ 333 X (33K)	B	50.9/8.6
R49	7030005160	S.RES ERJ2GEJ 105 X (1M)	B	49.7/13.7
R50	7030005090	S.RES ERJ2GEJ 104 X (100K)	B	49.7/11
R51	7030005290	S.RES ERJ2GEJ 682 X (6.8K)	T	52.4/7
R52	7030007340	S.RES ERJ2GEJ 153 X (15K)	T	59.1/12.5
R53	7030005000	S.RES ERJ2GEJ 471 X (470)	T	86.2/37.7
R54	7030010040	S.RES ERJ2GEJ-JPW	B	78.7/36.4
R55	7030005290	S.RES ERJ2GEJ 682 X (6.8K)	T	81.8/25.3
R56	7030005040	S.RES ERJ2GEJ 472 X (4.7K)	B	77.7/48.4
R57	7030005090	S.RES ERJ2GEJ 104 X (100K)	B	28.3/14.3
R58	7030005050	S.RES ERJ2GEJ 103 X (10K)	T	27.6/9
R59	7030005170	S.RES ERJ2GEJ 474 X (470K)	T	27.6/8.1
R60	7030005000	S.RES ERJ2GEJ 471 X (470)	T	30.9/10.2
R61	7030005040	S.RES ERJ2GEJ 472 X (4.7K)	T	28.8/8.5
R63	7030005220	S.RES ERJ2GEJ 223 X (22K)	B	92.8/8.3
R64	7030005220	S.RES ERJ2GEJ 223 X (22K)	B	92.8/6.5
R65	7030005090	S.RES ERJ2GEJ 104 X (100K)	B	50.9/9.5
R66	7030005050	S.RES ERJ2GEJ 103 X (10K)	T	86.6/11.8
R67	7030005290	S.RES ERJ2GEJ 682 X (6.8K)	T	53.4/7
R68	7030007290	S.RES ERJ2GEJ 222 X (2.2K)	B	53.7/17.9
R69	7030010040	S.RES ERJ2GEJ-JPW	T	85.6/13.6
R71	7030005090	S.RES ERJ2GEJ 104 X (100K)	T	57.7/6.3
R72	7030007290	S.RES ERJ2GEJ 222 X (2.2K)	T	64.9/55.6
R73	7030005000	S.RES ERJ2GEJ 471 X (470)	B	83.2/26.9
R74	7030007300	S.RES ERJ2GEJ 332 X (3.3K)	B	81.8/25.3
R75	7030009140	S.RES ERJ2GEJ 272 X (2.7K)	B	79.2/34
R76	7030007340	S.RES ERJ2GEJ 153 X (15K)	B	80.3/29.1
R77	7030005580	S.RES ERJ2GEJ 560 X (56)	T	78.2/47.2
R78	7030005070	S.RES ERJ2GEJ 683 X (68K)	B	81.5/34

M.=Mounted side (T: Mounted on the Top side, B: Mounted on the Bottom side)
S.=Surface mount

[MAIN-A UNIT] (MDC compatible)

REF NO.	PARTS NO.	DESCRIPTION	M.	H/V LOCATION
R79	7030005040	S.RES ERJ2GEJ 472 X (4.7K)	B	74.8/50
R80	7030005040	S.RES ERJ2GEJ 472 X (4.7K)	B	70/50.9
R81	7030005110	S.RES ERJ2GEJ 224 X (220K)	B	55.5/31.4
R82	7030005110	S.RES ERJ2GEJ 224 X (220K)	B	66.3/33.3
R83	7030008400	S.RES ERJ2GEJ 182 X (1.8K)	T	32.6/10.2
R85	7030005110	S.RES ERJ2GEJ 224 X (220K)	T	25.1/20.7
R87	7030007300	S.RES ERJ2GEJ 332 X (3.3K)	T	32.2/20.6
R88	7030005120	S.RES ERJ2GEJ 102 X (1K)	B	91.7/6.5
R90	7030005000	S.RES ERJ2GEJ 471 X (470)	B	89.4/18.9
R91	7030005700	S.RES ERJ2GEJ 274 X (270K)	T	85.6/11.8
R92	7030005090	S.RES ERJ2GEJ 104 X (100K)	T	87.3/13.4
R93	7030005310	S.RES ERJ2GEJ 124 X (120K)	T	83.9/8.2
R94	7030005080	S.RES ERJ2GEJ 823 X (82K)	T	108/34.7
R95	7030005720	S.RES ERJ2GEJ 563 X (56K)	T	108/33.8
R96	7030005240	S.RES ERJ2GEJ 473 X (47K)	B	63.7/15.5
R97	7030005060	S.RES ERJ2GEJ 333 X (33K)	B	53.3/16.6
R98	7030005030	S.RES ERJ2GEJ 152 X (1.5K)	B	62.1/19.4
R99	7030005240	S.RES ERJ2GEJ 473 X (47K)	B	60.2/19.4
R100	7030005030	S.RES ERJ2GEJ 152 X (1.5K)	B	77.9/34.4
R101	7030008280	S.RES ERJ2GEJ 271 X (270)	B	79.2/29.1
R102	7030005530	S.RES ERJ2GEJ 100 X (10)	T	23/22.9
R103	7030005600	S.RES ERJ2GEJ 273 X (27K)	B	29.9/23.8
R104	7030007280	S.RES ERJ2GEJ 331 X (330)	T	26.9/22.6
R105	7030005600	S.RES ERJ2GEJ 273 X (27K)	B	30.9/23.8
R106	7030007270	S.RES ERJ2GEJ 151 X (150)	T	34.3/22.5
R107	7030007340	S.RES ERJ2GEJ 153 X (15K)	B	129.7/52.3
R108	7030005240	S.RES ERJ2GEJ 473 X (47K)	B	82.3/18.9
R109	7030005700	S.RES ERJ2GEJ 274 X (270K)	B	81.3/18.9
R110	7030005050	S.RES ERJ2GEJ 103 X (10K)	T	78.4/20.2
R111	7030005050	S.RES ERJ2GEJ 103 X (10K)	T	95.9/28.3
R112	7030005700	S.RES ERJ2GEJ 274 X (270K)	T	80.8/20.1
R113	7030005240	S.RES ERJ2GEJ 473 X (47K)	B	57.9/19.4
R114	7030005090	S.RES ERJ2GEJ 104 X (100K)	B	53.7/13.3
R115	7030005090	S.RES ERJ2GEJ 104 X (100K)	T	114.4/18.4
R116	7030005090	S.RES ERJ2GEJ 104 X (100K)	B	85.3/7.3
R118	7030006610	S.RES ERJ2GEJ 394 X (390K)	T	89.5/11.7
R120	7030009280	S.RES ERJ2GEJ 391 X	T	30.3/34.3
R122	7030005600	S.RES ERJ2GEJ 273 X (27K)	T	32.3/35.2
R123	7030005600	S.RES ERJ2GEJ 273 X (27K)	T	33.5/35.2
R125	7030007270	S.RES ERJ2GEJ 151 X (150)	T	35/34
R127	7030005050	S.RES ERJ2GEJ 103 X (10K)	B	79.1/18.3
R128	7030008290	S.RES ERJ2GEJ 183 X (18K)	T	112.1/45.1
R129	7030005040	S.RES ERJ2GEJ 472 X (4.7K)	T	112.1/44.1
R130	7030005070	S.RES ERJ2GEJ 683 X (68K)	T	104.9/43.2
R131	7030005070	S.RES ERJ2GEJ 683 X (68K)	T	104.9/44.1
R132	7030004980	S.RES ERJ2GEJ 101 X (100)	T	114.4/17.5
R134	7030005160	S.RES ERJ2GEJ 105 X (1M)	T	128.9/26.3
R135	7030005160	S.RES ERJ2GEJ 105 X (1M)	T	128.9/25.3
R136	7030005160	S.RES ERJ2GEJ 105 X (1M)	T	128.9/24.2
R139	7410001140	S.ARR EXB28V104JX	T	130.6/20.6
R140	7030011000	S.RES RR0510P-392-D (3.9K)	T	48.1/47.2
R141	7030008340	S.RES RR0510P-182-D (1.8K)	T	50.8/45.4
R142	7030010040	S.RES ERJ2GEJ-JPW	T	49/47.2
R143	7030011000	S.RES RR0510P-392-D (3.9K)	T	58.7/42.2
R144	7030008340	S.RES RR0510P-182-D (1.8K)	T	61.7/40.4
R145	7030010040	S.RES ERJ2GEJ-JPW	T	59.6/42.2
R146	7030011000	S.RES RR0510P-392-D (3.9K)	T	71.8/45.8
R147	7030008340	S.RES RR0510P-182-D (1.8K)	T	70/41.9
R148	7030010040	S.RES ERJ2GEJ-JPW	T	71.8/44.9
R149	7030005310	S.RES ERJ2GEJ 124 X (120K)	T	69.1/36.3
R150	7030005240	S.RES ERJ2GEJ 473 X (47K)	T	89.8/15.5
R151	7030005060	S.RES ERJ2GEJ 333 X (33K)	T	91/16.1
R152	7030005090	S.RES ERJ2GEJ 104 X (100K)	T	88.9/16.4
R153	7030007300	S.RES ERJ2GEJ 332 X (3.3K)	T	39.9/32.2
R154	7030004970	S.RES ERJ2GEJ 470 X (47)	T	42.9/40.1
R155	7030005120	S.RES ERJ2GEJ 102 X (1K)	T	41.7/32.4
R156	7030004970	S.RES ERJ2GEJ 470 X (47)	T	42.5/41.3
R157	7030005090	S.RES ERJ2GEJ 104 X (100K)	B	33.7/23.6
R158	7030005240	S.RES ERJ2GEJ 473 X (47K)	T	112.1/42.3
R159	7030005240	S.RES ERJ2GEJ 473 X (47K)	T	112.1/40.5
R160	7030005240	S.RES ERJ2GEJ 473 X (47K)	T	113.8/38.7
R161	7030005070	S.RES ERJ2GEJ 683 X (68K)	T	104.9/46.8
R162	7030005240	S.RES ERJ2GEJ 473 X (47K)	T	128.2/14.4
R163	7030005240	S.RES ERJ2GEJ 473 X (47K)	T	128.7/16.3
R164	7030005240	S.RES ERJ2GEJ 473 X (47K)	T	129.4/14.4
R165	7030005230	S.RES ERJ2GEJ 334 X (330K)	T	128.7/17.8
R166	7030005230	S.RES ERJ2GEJ 334 X (330K)	T	128.7/18.7
R167	7030005230	S.RES ERJ2GEJ 334 X (330K)	T	129.8/16.2
R168	7030006581	S.RES ERA3YED 122V (1.2K)	T	53.6/47.5
R169	7030007230	S.RES ERA3YED 102V (1K)	T	63.8/42.6
R170	7030010390	S.RES ERA3YED 821V (820)	T	74.1/43.2
R171	7030005090	S.RES ERJ2GEJ 104 X (100K)	T	56.3/46.7
R172	7030008280	S.RES ERJ2GEJ 271 X (270)	B	36.4/46.4
R173	7030007270	S.RES ERJ2GEJ 151 X (150)	B	39/31.2
R174	7030004980	S.RES ERJ2GEJ 101 X (100)	B	34.6/38.7
R175	7030004980	S.RES ERJ2GEJ 101 X (100)	B	33/38.7
R176	7030005590	S.RES ERJ2GEJ 680 X (68)	B	31.3/37.4
R177	7030005590	S.RES ERJ2GEJ 680 X (68)	B	31.3/34.9
R178	7030005240	S.RES ERJ2GEJ 473 X (47K)	T	113.8/37.8
R179	7030008300	S.RES ERJ2GEJ 184 X (180K)	T	117.6/34.6
R180	7030005720	S.RES ERJ2GEJ 563 X (56K)	T	118.3/35.3
R181	7030005220	S.RES ERJ2GEJ 223 X (22K)	T	119/36
R182	7030005120	S.RES ERJ2GEJ 102 X (1K)	T	116.9/33.9
R183	7030005070	S.RES ERJ2GEJ 683 X (68K)	T	103.1/46.8
R184	7030005220	S.RES ERJ2GEJ 223 X (22K)	T	113.8/36.9
R185	7030005070	S.RES ERJ2GEJ 683 X (68K)	B	102.3/45.6
R186	7030005160	S.RES ERJ2GEJ 105 X (1M)	T	81.8/18.9
R187	7030005060	S.RES ERJ2GEJ 333 X (33K)	T	80.6/17.5
R188	7030005090	S.RES ERJ2GEJ 104 X (100K)	T	78.5/14.9
R189	7030005720	S.RES ERJ2GEJ 563 X (56K)	T	78.5/15.8
R190	7030005080	S.RES ERJ2GEJ 823 X (82K)	T	80.6/18.4
R191	7030004980	S.RES ERJ2GEJ 101 X (100)	T	60.5/47
R192	7030004980	S.RES ERJ2GEJ 101 X (100)	B	66.3/53.2
R193	7030005050	S.RES ERJ2GEJ 103 X (10K)	B	66.3/45.2
R194	7030005110	S.RES ERJ2GEJ 224 X (220K)	B	62.7/50.8

[MAIN-A UNIT] (MDC compatible)

REF NO.	PARTS NO.	DESCRIPTION	M.	H/V LOCATION
R195	7030009320	S.RES ERJ2GEJ 4R7 X (4.7)	B	55.8/50.3
R196	7030005120	S.RES ERJ2GEJ 102 X (1K)	B	65.2/42.8
R197	7030005050	S.RES ERJ2GEJ 103 X (10K)	B	64.7/44.5
R198	7030010090	S.RES ERJ2GEJ 180 X (18)	B	36/47.6
R199	7030008280	S.RES ERJ2GEJ 271 X (270)	B	37.3/47.6
R200	7030005050	S.RES ERJ2GEJ 103 X (10K)	B	8.4/20.6
R201	7410001130	S.ARR EXB28V102JX	B	117/51.7
R202	7030005090	S.RES ERJ2GEJ 104 X (100K)	B	122.5/44.8
R203	7030005120	S.RES ERJ2GEJ 102 X (1K)	B	127.4/47.3
R204	7410000750	S.ARR EXB-V4V 104JV (100K)	B	129.6/42.7
R205	7030008010	S.RES ERJ2GEJ 123 X (12K)	T	127.5/40.1
R206	7030005120	S.RES ERJ2GEJ 102 X (1K)	B	127/39.5
R207	7030005050	S.RES ERJ2GEJ 103 X (10K)	T	120.9/37.5
R208	7030005050	S.RES ERJ2GEJ 103 X (10K)	T	121.6/38.2
R209	7410001130	S.ARR EXB28V102JX	B	125.8/40.8
R210	7030008010	S.RES ERJ2GEJ 123 X (12K)	T	124.2/38.4
R211	7030008010	S.RES ERJ2GEJ 123 X (12K)	T	125.9/41.1
R212	7030005160	S.RES ERJ2GEJ 105 X (1M)	T	122.1/41.1
R213	7030005090	S.RES ERJ2GEJ 104 X (100K)	B	55.3/51.8
R214	7030004980	S.RES ERJ2GEJ 101 X (100)	B	56.4/54
R215	7030005050	S.RES ERJ2GEJ 103 X (10K)	B	63.5/61.3
R216	7030005590	S.RES ERJ2GEJ 680 X (68)	B	61.9/62.3
R218	7030010040	S.RES ERJ2GEJ-JPW	B	56.4/51.8
R219	7030005050	S.RES ERJ2GEJ 103 X (10K)	B	46/49.8
R220	7030005040	S.RES ERJ2GEJ 472 X (4.7K)	B	49.3/52
R221	7030005050	S.RES ERJ2GEJ 103 X (10K)	B	44.4/49.8
R222	7030005090	S.RES ERJ2GEJ 104 X (100K)	B	17.7/33.9
R223	7030005090	S.RES ERJ2GEJ 104 X (100K)	B	16.2/33.9
R224	7030005050	S.RES ERJ2GEJ 103 X (10K)	B	15.7/32.7
R225	7030005000	S.RES ERJ2GEJ 471 X (470)	B	8/19.2
R226	7030004980	S.RES ERJ2GEJ 101 X (100)	T	109.7/53.5
R227	7030005090	S.RES ERJ2GEJ 104 X (100K)	B	107.1/49.3
R228	7410001140	S.ARR EXB28V104JX	T	103.3/49
R230	7030005050	S.RES ERJ2GEJ 103 X (10K)	B	124.7/42.7
R232	7030005530	S.RES ERJ2GEJ 100 X (10)	T	120.4/41.1
R233	7410000750	S.ARR EXB-V4V 104JV (100K)	T	130/34.7
R234	7410001130	S.ARR EXB28V102JX	B	129.4/34.4
R236	7030009530	S.RES ERJ2GEJ 270 X (27)	B	63.9/71.5
R237	7030005040	S.RES ERJ2GEJ 472 X (4.7K)	B	65.3/69.7
R238	7030008010	S.RES ERJ2GEJ 123 X (12K)	B	61.9/65.1
R240	7030005570	S.RES ERJ2GEJ 820 X (82)	B	62.4/67.4
R241	7030004980	S.RES ERJ2GEJ 101 X (100)	B	58.5/66
R242	7030004970	S.RES ERJ2GEJ 470 X (47)	T	12/33.1
R243	7030009320	S.RES ERJ2GEJ 4R7 X (4.7)	T	10/36
R244	7030005050	S.RES ERJ2GEJ 103 X (10K) [B]	B	15.1/36.3
	7030004980	S.RES ERJ2GEJ 101 X (100) [F]		
	7030004980	S.RES ERJ2GEJ 101 X (100) [D]		
	7030005050	S.RES ERJ2GEJ 103 X (10K) [G]		
	7030004980	S.RES ERJ2GEJ 101 X (100) [J]		
	7030005050	S.RES ERJ2GEJ 103 X (10K) [H]		
	7030005050	S.RES ERJ2GEJ 103 X (10K) [I]		
R245	7030005530	S.RES ERJ2GEJ 100 X (10)	B	11.9/39.9
R246	7030005090	S.RES ERJ2GEJ 104 X (100K)	B	7.5/38.6
R247	7030004990	S.RES ERJ2GEJ 221 X (220)	B	7.7/36.3
R248	7410001130	S.ARR EXB28V102JX	B	103.9/47.9
R249	7410001130	S.ARR EXB28V102JX	B	123.9/27.6
R250	7410001130	S.ARR EXB28V102JX	B	122.1/25.7
R251	7410001140	S.ARR EXB28V104JX	T	124.7/28.7
R252	7410001140	S.ARR EXB28V104JX	T	122.1/25.7
R253	7030008290	S.RES ERJ2GEJ 183 X (18K)	T	9.5/40.5
R254	7030005050	S.RES ERJ2GEJ 103 X (10K)	T	7.4/42.2
R255	7030005310	S.RES ERJ2GEJ 124 X (120K)	B	6.6/38.6
R257	7030008400	S.RES ERJ2GEJ 182 X (1.8K)	T	9/42.2
R258	7030005170	S.RES ERJ2GEJ 474 X (470K)	T	11/44.5
R259	7030005090	S.RES ERJ2GEJ 104 X (100K)	B	6/45.1
R260	7030005090	S.RES ERJ2GEJ 104 X (100K)	B	6/47
R261	7410001130	S.ARR EXB28V102JX	B	99.7/43.5
R262	7410001130	S.ARR EXB28V102JX	T	100.2/37.4
R263	7410001130	S.ARR EXB28V102JX	B	97/40.7
R264	7410001140	S.ARR EXB28V104JX	T	103.8/37
R265	7030005050	S.RES ERJ2GEJ 103 X (10K)	T	103.8/39.2
R266	7410001130	S.ARR EXB28V102JX	B	120.1/23.5
R267	7410001130	S.ARR EXB28V102JX	B	118.3/21.7
R268	7410001130	S.ARR EXB28V102JX	B	116.5/19.9
R269	7030005090	S.RES ERJ2GEJ 104 X (100K)	T	119.4/20.8
R271	7030004980	S.RES ERJ2GEJ 101 X (100)	T	77.6/78.5
R272	7030007280	S.RES ERJ2GEJ 331 X (330)	T	61/76.5
R273	7030005050	S.RES ERJ2GEJ 103 X (10K) [F]	T	62.3/76.1
	7030005050	S.RES ERJ2GEJ 103 X (10K) [D]		
	7030005050	S.RES ERJ2GEJ 103 X (10K) [J]		
R274	7030004980	S.RES ERJ2GEJ 101 X (100)	T	56.7/69.3
R275	7030005030	S.RES ERJ2GEJ 152 X (1.5K)	T	64.8/73.8
R276	7030007300	S.RES ERJ2GEJ 332 X (3.3K) [B]	T	65.8/73.8
	7030005040	S.RES ERJ2GEJ 472 X (4.7K) [F]		
	7030005040	S.RES ERJ2GEJ 472 X (4.7K) [D]		
	7030007300	S.RES ERJ2GEJ 332 X (3.3K) [G]		
	7030005040	S.RES ERJ2GEJ 472 X (4.7K) [J]		
	7030007300	S.RES ERJ2GEJ 332 X (3.3K) [H]		
	7030007300	S.RES ERJ2GEJ 332 X (3.3K) [I]		
R277	7030005050	S.RES ERJ2GEJ 103 X (10K)	B	4.8/45.6
R278	7030005050	S.RES ERJ2GEJ 103 X (10K)	T	132.2/29.9
R279	7030005090	S.RES ERJ2GEJ 104 X (100K)	T	131.3/29.9
R280	7410001130	S.ARR EXB28V102JX	B	95.2/38.9
R281	7030005090	S.RES ERJ2GEJ 104 X (100K)	T	93.7/48.8
R282	7410000750	S.ARR EXB-V4V 104JV (100K)	T	97.2/45.3
R283	7410001130	S.ARR EXB28V102JX	T	103.1/21.7
R284	7030005120	S.RES ERJ2GEJ 102 X (1K)	T	111.2/25.1
R285	7410001130	S.ARR EXB28V102JX	B	107.1/19.9
R286	7410001140	S.ARR EXB28V104JX	T	121.7/22.2

M.=Mounted side (T: Mounted on the Top side, B: Mounted on the Bottom side)
S.=Surface mount

[MAIN-A UNIT] (MDC compatible)

REF NO.	PARTS NO.	DESCRIPTION	M.	H/V LOCATION
R287	7030005580	S.RES ERJ2GEJ 560 X (56) [B]	T	55.7/72.6
	7030004990	S.RES ERJ2GEJ 221 X (220) [F]		
	7030004990	S.RES ERJ2GEJ 221 X (220) [D]		
	7030005580	S.RES ERJ2GEJ 560 X (56) [G]		
	7030004990	S.RES ERJ2GEJ 221 X (220) [J]		
	7030005580	S.RES ERJ2GEJ 560 X (56) [H]		
	7030005580	S.RES ERJ2GEJ 560 X (56) [I]		
R288	7030005100	S.RES ERJ2GEJ 154 X (150K)	T	54.1/68.2
R289	7030005170	S.RES ERJ2GEJ 474 X (470K) [B]	B	38/63.7
	7030005170	S.RES ERJ2GEJ 474 X (470K) [G]		
	7030005170	S.RES ERJ2GEJ 474 X (470K) [H]		
	7030005170	S.RES ERJ2GEJ 474 X (470K) [I]		
R290	7520000260	S.POS PRF18BB471QB1RB [B]	T	33.9/63
	7520000260	S.POS PRF18BB471QB1RB [G]		
	7520000260	S.POS PRF18BB471QB1RB [H]		
	7520000260	S.POS PRF18BB471QB1RB [I]		
R291	7030005120	S.RES ERJ2GEJ 102 X (1K)	T	109.2/24.5
R292	7030006070	S.RES ERJ12YJ101U (100)	B	43.6/66.1
R293	7030005120	S.RES ERJ2GEJ 102 X (1K)	T	50.6/70.5
R294	7030005050	S.RES ERJ2GEJ 103 X (10K)	T	51.7/68.2
R295	7030008290	S.RES ERJ2GEJ 183 X (18K)	T	50.6/71.4
R296	7030005040	S.RES ERJ2GEJ 472 X (4.7K)	T	53.8/64.2
R297	7030008010	S.RES ERJ2GEJ 123 X (12K)	T	50.5/68.6
R298	7030005090	S.RES ERJ2GEJ 104 X (100K)	T	45.6/69.9
R300	7030005050	S.RES ERJ2GEJ 103 X (10K)	B	99.9/59.6
R301	7030007290	S.RES ERJ2GEJ 222 X (2.2K)	T	106.2/55.6
R302	7030000480	S.RES MCR10EZHJ 6.8K (682)	T	79/64.4
R303	7030000480	S.RES MCR10EZHJ 6.8K (682)	T	80.9/64.4
R304	7030000440	S.RES MCR10EZHJ 3.3K (332)	T	82.8/64.4
R305	7030005050	S.RES ERJ2GEJ 103 X (10K)	T	40.3/19.4
R306	7030005040	S.RES ERJ2GEJ 472 X (4.7K)	T	41/21.7
R307	7030005050	S.RES ERJ2GEJ 103 X (10K)	B	27/63
R309	7030005070	S.RES ERJ2GEJ 683 X (68K)	T	89.9/7.2
R310	7030004980	S.RES ERJ2GEJ 101 X (100)	B	109.3/62.8
R311	7030000220	S.RES MCR10EZHJ 47 (470)	B	15/76.9
R312	7030005700	S.RES ERJ2GEJ 274 X (270K)	B	31.5/62.4
R313	7030003370	S.RES ERJ3GEYJ 271 V (270)	B	8.6/54
R314	7030005600	S.RES ERJ2GEJ 273 X (27K)	B	3/53
R315	7030000220	S.RES MCR10EZHJ 47 (470)	B	3.5/57.4
R316	7030005170	S.RES ERJ2GEJ 474 X (470K)	T	90.8/11.3
R317	7030005160	S.RES ERJ2GEJ 105 X (1M)	B	108.3/83.7
R318	7030005160	S.RES ERJ2GEJ 105 X (1M)	B	112.5/82.7
R319	7030005120	S.RES ERJ2GEJ 102 X (1K)	B	112.1/81.5
R320	7030005160	S.RES ERJ2GEJ 105 X (1M)	B	107.2/82.4
R321	7030004970	S.RES ERJ2GEJ 470 X (47)	B	108.4/82
R322	7030005600	S.RES ERJ2GEJ 273 X (27K)	B	2.1/79.2
R323	7030003370	S.RES ERJ3GEYJ 271 V (270)	B	6.3/78.7
R324	7030000620	S.RES MCR10EZHJ 100 K (104)	B	5.6/85.5
R325	7030005050	S.RES ERJ2GEJ 103 X (10K)	B	130.5/45.2
R326	7030005090	S.RES ERJ2GEJ 104 X (100K)	B	131.8/51.7
R327	7030007290	S.RES ERJ2GEJ 222 X (2.2K)	B	131.1/54.2
R328	7030005090	S.RES ERJ2GEJ 104 X (100K)	B	134.2/51.7
R332	7030005090	S.RES ERJ2GEJ 104 X (100K)	T	109.6/27.9
R333	7030005120	S.RES ERJ2GEJ 102 X (1K)	T	109.6/26.9
R334	7520000270	S.POS PRG21BC4R7MM1RA	T	101.4/79.7
R335	7030005050	S.RES ERJ2GEJ 103 X (10K)	T	101.8/83.9
R336	7030005120	S.RES ERJ2GEJ 102 X (1K)	T	111.3/78.5
R337	7410001130	S.ARR EXB28V102JX	T	104.6/75.9
R338	7030005651	S.RES ERA3YKD 304V (300K)	T	113.6/54.3
R339	7030005871	S.RES ERA3YKD 104V (100K)	T	113.6/52.9
R340	7030003560	S.RES ERJ3GEYJ 103 V (10K)	T	136.3/65.7
R341	7030003560	S.RES ERJ3GEYJ 103 V (10K)	B	130.7/85.9
R342	7030005090	S.RES ERJ2GEJ 104 X (100K)	B	135.4/52.2
R343	7030007290	S.RES ERJ2GEJ 222 X (2.2K)	B	138.2/49.4
R344	7030005110	S.RES ERJ2GEJ 224 X (220K)	B	133.3/54.6
R345	7030005110	S.RES ERJ2GEJ 224 X (220K)	B	133.3/56.3
R346	7030008410	S.RES ERJ2GEJ 392 X (3.9K)	B	137/52.2
R347	7030005050	S.RES ERJ2GEJ 103 X (10K)	B	137.8/53.7
R348	7030005700	S.RES ERJ2GEJ 274 X (270K)	B	131/75.5
R349	7030005090	S.RES ERJ2GEJ 104 X (100K)	B	129.8/76.5
R350	7030005120	S.RES ERJ2GEJ 102 X (1K)	B	139.1/47.8
R351	7030004980	S.RES ERJ2GEJ 101 X (100)	B	136.3/38.1
R352	7030008300	S.RES ERJ2GEJ 184 X (180K)	B	139.7/39
R353	7030005230	S.RES ERJ2GEJ 334 X (330K)	B	138.2/47.8
R354	7030010040	S.RES ERJ2GEJ-JPW	T	140.4/36
R355	7030008280	S.RES ERJ2GEJ 271 X (270)	B	139.7/34.3
R356	7540000290	ABS ERZV10D220		
R359	7030005090	S.RES ERJ2GEJ 104 X (100K)	B	114.8/82.9
R360	7030005090	S.RES ERJ2GEJ 104 X (100K)	T	80.6/5.3
R361	7030005600	S.RES ERJ2GEJ 273 X (27K)	T	78.4/5.3
R362	7030005050	S.RES ERJ2GEJ 103 X (10K)	T	124.8/50.2
R363	7030005120	S.RES ERJ2GEJ 102 X (1K)	T	42.9/38.3
R364	7030009140	S.RES ERJ2GEJ 272 X (2.7K)	T	42.9/37.4
R365	7030004970	S.RES ERJ2GEJ 470 X (47)	T	38.3/37.9
R366	7030005050	S.RES ERJ2GEJ 103 X (10K)	B	131.4/63.4
R367	7030005000	S.RES ERJ2GEJ 471 X (470)	B	130.1/63
R368	7030005050	S.RES ERJ2GEJ 103 X (10K)	T	78.3/7.6
R370	7030005010	S.RES ERJ2GEJ 681 X (680)	T	71.2/70.4
R371	7030005050	S.RES ERJ2GEJ 103 X (10K)	T	119.5/84.6
R372	7030005040	S.RES ERJ2GEJ 472 X (4.7K)	T	25.9/8.1
R373	7030005040	S.RES ERJ2GEJ 472 X (4.7K)	T	74/21.6
R375	7030005030	S.RES ERJ2GEJ 152 X (1.5K)	T	27.6/5.3
R376	7030005160	S.RES ERJ2GEJ 105 X (1M)	B	109.1/12.1
R377	7030005160	S.RES ERJ2GEJ 105 X (1M)	B	110.9/12.1
R378	7410001140	S.ARR EXB28V104JX	B	100.7/18.3
R379	7030005090	S.RES ERJ2GEJ 104 X (100K)	T	111.6/23.8
R386	7030005120	S.RES ERJ2GEJ 102 X (1K)	T	105.8/85.1
R387	7030005120	S.RES ERJ2GEJ 102 X (1K)	T	107.8/85.1
R389	7030005090	S.RES ERJ2GEJ 104 X (100K)	T	110.4/10.7
R390	7030008300	S.RES ERJ2GEJ 184 X (180K)	B	23/10.5
R391	7030005120	S.RES ERJ2GEJ 102 X (1K)	B	23.9/7.3
R392	7030008400	S.RES ERJ2GEJ 182 X (1.8K)	B	29.2/5.6
R393	7030004980	S.RES ERJ2GEJ 101 X (100)	B	28.3/7.3
R394	7030004980	S.RES ERJ2GEJ 101 X (100)	B	23/8.9
R395	7030005290	S.RES ERJ2GEJ 682 X (6.8K)	B	22.1/7.3

[MAIN-A UNIT] (MDC compatible)

REF NO.	PARTS NO.	DESCRIPTION	M.	H/V LOCATION
R396	7030009290	S.RES ERJ2GEJ 562 X (5.6K)	B	22.1/5.6
R397	7030005120	S.RES ERJ2GEJ 102 X (1K)	B	79.8/46.1
R398	7030005120	S.RES ERJ2GEJ 102 X (1K)	T	79.3/41.3
R399	7030005050	S.RES ERJ2GEJ 103 X (10K)	B	95.8/10
R400	7030005030	S.RES ERJ2GEJ 152 X (1.5K)	B	23/5.6
C1	4030017420	S.CER ECJ0EC1H470J	T	88.9/54.3
C2	4030017420	S.CER ECJ0EC1H470J	T	89.9/54.3
C3	4030017420	S.CER ECJ0EC1H470J	T	41.5/15.4
C4	4030017420	S.CER ECJ0EC1H470J	B	50/15
C5	4030017460	S.CER ECJ0EB1E102K	T	89.4/34
C6	4550007080	S.TAN TEESVA 1C 106M8R	T	80.8/55.1
C7	4030017420	S.CER ECJ0EC1H470J	T	84/18.4
C8	4030017420	S.CER ECJ0EC1H470J	T	89.9/52
C9	4030016930	S.CER ECJ0EB1A104K	T	88.9/52
C10	4030016930	S.CER ECJ0EB1A104K	T	80.6/50.7
C11	4030016930	S.CER ECJ0EB1A104K	T	10.9/18.8
C12	4030016930	S.CER ECJ0EB1A104K	T	8.5/7.4
C13	4030016930	S.CER ECJ0EB1A104K	T	85.6/10
C14	4030016930	S.CER ECJ0EB1A104K	T	86.6/10
C15	4030017460	S.CER ECJ0EB1E102K	T	41.5/7.7
C16	4550000460	S.TAN TEESVA 1C 105M8R	T	42.7/6.2
C17	4550000460	S.TAN TEESVA 1C 105M8R	B	42.7/6.2
C18	4030017420	S.CER ECJ0EC1H470J	T	41.5/14.5
C19	4030017420	S.CER ECJ0EC1H470J	B	50/15.9
C20	4030016970	S.CER ECJ0EB1C223K	B	100.9/52.3
C21	4030017420	S.CER ECJ0EC1H470J	T	41.5/13.5
C22	4030017420	S.CER ECJ0EC1H470J	T	41.5/12.6
C23	4030016930	S.CER ECJ0EB1A104K	T	51.8/5.6
C24	4030017660	S.CER ECJ0EC1H330J	B	39.8/9.8
C25	4030017420	S.CER ECJ0EC1H470J	T	61.4/6
C26	4030016930	S.CER ECJ0EB1A104K	B	37.2/5.8
C27	4030018240	S.CER ECJ0EB1E562K	B	36.3/7.5
C28	4030016790	S.CER ECJ0EB1C103K	T	79.3/7.6
C29	4030017460	S.CER ECJ0EB1E102K	T	79/13.6
C30	4030016930	S.CER ECJ0EB1A104K	T	78.1/13.6
C31	4030017460	S.CER ECJ0EB1E102K	T	80.6/51.7
C32	4030017500	S.CER ECJ0EC1H560J	B	33.3/15.9
C33	4030016930	S.CER ECJ0EB1A104K	B	34.8/12.8
C34	4030017570	S.CER ECJ0EC1H040B	B	32.1/15.4
C35	4030017590	S.CER ECJ0EC1H070C	B	30.9/15.9
C36	4030016930	S.CER ECJ0EB1A104K	T	22.4/14.9
C37	4030017360	S.CER ECJ0EC1H030B	B	28.3/15.4
C38	4030016930	S.CER ECJ0EB1A104K	T	22/6.2
C39	4030016930	S.CER ECJ0EB1A104K	B	13.6/6.2
C40	4030016930	S.CER ECJ0EB1A104K	T	23.8/6.2
C41	4030016930	S.CER ECJ0EB1A104K	T	22/12.5
C42	4030016930	S.CER ECJ0EB1A104K	T	23/12.5
C43	4030017680	S.CER ECJ0EC1H820J	T	26.4/9.4
C44	4030017680	S.CER ECJ0EC1H820J	T	25.5/9.4
C45	4030017790	S.CER ECJ0EB1E682K	B	91.7/10
C46	4030016930	S.CER ECJ0EB1A104K	B	93.8/10
C47	4030016970	S.CER ECJ0EB1C223K	T	92.1/15.1
C48	4030017710	S.CER ECJ0EC1H181J	B	49.7/9.1
C49	4550007080	S.TAN TEESVA 1C 106M8R	T	52.1/15.4
C50	4030017460	S.CER ECJ0EB1E102K	T	54.3/12
C51	4030017400	S.CER ECJ0EC1H220J	T	47.8/19
C52	4030017400	S.CER ECJ0EC1H220J	T	44.7/7.8
C53	4030017900	S.CER ECJ0EB1C123K	T	59.1/10.6
C54	4030018080	S.CER ECJ0EB1H182K	T	59.1/11.5
C55	4030016790	S.CER ECJ0EB1C103K	T	64.5/57
C56	4030017620	S.CER ECJ0EC1H100C	T	87.7/35.5
C57	4030016930	S.CER ECJ0EB1A104K	T	80.1/36.7
C58	4030017430	S.CER ECJ0EC1H101J	T	85.2/38.6
C59	4030017460	S.CER ECJ0EB1E102K	T	81.8/24.3
C60	4030017420	S.CER ECJ0EC1H470J	T	82.9/41.5
C63	4030017620	S.CER ECJ0EC1H100C	T	84/39.1
C64	4030017780	S.CER ECJ0EB1E472K	T	81.3/41.3
C65	4030017460	S.CER ECJ0EB1E102K	T	27.6/10.6
C66	4550006050	S.TAN TEESVA 0J 106M8R	T	31.1/6.8
C67	4030017460	S.CER ECJ0EB1E102K	T	27.6/7.1
C68	4030017460	S.CER ECJ0EB1E102K	T	30.5/9
C69	4030017460	S.CER ECJ0EB1E102K	T	32.6/15.4
C70	4030017420	S.CER ECJ0EC1H470J	B	28.3/13.4
C71	4030016940	S.CER ECJ0EB1A393K	B	91.7/8.3
C72	4030018860	S.CER ECJ0EB0J105K	B	50.7/11
C73	4030017750	S.CER ECJ0EB1E122K	B	51.3/16.6
C74	4030016930	S.CER ECJ0EB1A104K	B	52.3/16.6
C75	4030016930	S.CER ECJ0EB1A104K	B	56.2/12.6
C77	4030017460	S.CER ECJ0EB1E102K	B	54.2/16.6
C78	4030017460	S.CER ECJ0EB1E102K	B	53.7/9
C79	4550007080	S.TAN TEESVA 1C 106M8R	T	66.5/55.3
C80	4030017780	S.CER ECJ0EB1E472K	B	79.2/35
C81	4550000460	S.TAN TEESVA 1C 105M8R	B	82.2/36.4
C82	4030017460	S.CER ECJ0EB1E102K	B	84.1/26.9
C83	4550000460	S.TAN TEESVA 1C 105M8R	B	84/32.5
C84	4030017460	S.CER ECJ0EB1E102K	T	78.2/48.8
C85	4030017380	S.CER ECJ0EC1H050B	B	77.1/47.2
C86	4030017350	S.CER ECJ0EC1H020B	B	74.8/48.3
C87	4030017580	S.CER ECJ0EC1H060C	B	73.7/48.3
C88	4030017380	S.CER ECJ0EC1H050B	B	72.4/48.6
C89	4030017580	S.CER ECJ0EC1H060C	B	71.1/49.1
C90	4030017350	S.CER ECJ0EC1H020B	B	70/49.1
C91	4030016790	S.CER ECJ0EB1C103K	T	27.3/17.3
C92	4030017460	S.CER ECJ0EB1E102K	T	25.1/22.4
C93	4030017680	S.CER ECJ0EC1H820J	T	32.6/12.6
C94	4030017460	S.CER ECJ0EB1E102K	B	27.8/12.5
C95	4030016790	S.CER ECJ0EB1C103K	T	28.9/20.1
C98	4030016930	S.CER ECJ0EB1A104K	B	89.3/7.3
C99	4030016930	S.CER ECJ0EB1A104K	B	90.7/14.8
C100	4030016930	S.CER ECJ0EB1A104K	T	87.3/14.3
C101	4030017710	S.CER ECJ0EC1H181J	T	83.9/7.2
C102	4030016930	S.CER ECJ0EB1A104K	T	108/32.8
C103	4030016930	S.CER ECJ0EB1A104K	B	55.3/19.3

M.=Mounted side (T: Mounted on the Top side, B: Mounted on the Bottom side)
S.=Surface mount

[MAIN-A UNIT] (MDC compatible)

REF NO.	PARTS NO.	DESCRIPTION	M.	H/V LOCATION
C104	4550003250	S.TAN TEESVA 1V 474M8R	B	67.2/24.2
C105	4030017420	S.CER ECJ0EC1H470J	T	49.2/29.4
C106	4030017460	S.CER ECJ0EB1E102K	B	78/29.1
C107	4030016930	S.CER ECJ0EB1A104K	B	54.2/28.8
C109	4550006480	S.TAN TEESVA 1C 475M8R	B	56.1/27.7
C110	4030017420	S.CER ECJ0EC1H470J	T	60.1/27
C111	4030016930	S.CER ECJ0EB1A104K	B	66.3/30.3
C112	4030017460	S.CER ECJ0EB1E102K	B	67.4/30.3
C113	4030017420	S.CER ECJ0EC1H470J	T	72.1/26.6
C114	4030016790	S.CER ECJ0EB1C103K	T	24.2/22.3
C115	4030016790	S.CER ECJ0EB1C103K	T	21.4/22
C116	4030016790	S.CER ECJ0EB1C103K	T	28.5/22.6
C118	4030017640	S.CER ECJ0EC1H150J	T	20.5/28.7
C120	4030016790	S.CER ECJ0EB1C103K	T	32.6/22.5
C122	4030017660	S.CER ECJ0EC1H330J	T	39.8/28.9
C124	4030016930	S.CER ECJ0EB1A104K	B	90.3/18.9
C125	4030017460	S.CER ECJ0EB1E102K	B	128.5/52.6
C126	4030016930	S.CER ECJ0EB1A104K	T	79.6/20.6
C127	4030016930	S.CER ECJ0EB1A104K	B	82.8/20.1
C128	4030016930	S.CER ECJ0EB1A104K	T	78.4/19.3
C129	4030016930	S.CER ECJ0EB1A104K	B	63.7/16.4
C130	4030016930	S.CER ECJ0EB1A104K	B	135.6/25.4
C131	4030017660	S.CER ECJ0EC1H330J	T	135.9/25.7
C132	4030017660	S.CER ECJ0EC1H330J	T	135.9/18
C133	4030018010	S.CER ECJ0EC1H360J	T	48.1/35.5
C134	4030017640	S.CER ECJ0EC1H150J	T	49.4/34.8
C135	4030017660	S.CER ECJ0EC1H330J	T	64.1/32.5
C136	4030017340	S.CER ECJ0EC1H010B	T	71.1/30.8
C137	4030017570	S.CER ECJ0EC1H040B	T	71.1/29.9
C138	4030017730	S.CER ECJ0EB1E471K	T	71.9/33
C139	4030017390	S.CER ECJ0EC1H180J	T	62.1/32
C140	4030017360	S.CER ECJ0EC1H030B	T	72.5/30.7
C141	4030017360	S.CER ECJ0EC1H030B	T	72.1/29
C142	4030018860	S.CER ECJ0EB0J105K	T	89.5/12.7
C143	4030017400	S.CER ECJ0EC1H220J	T	71.3/36.6
C145	4030016790	S.CER ECJ0EB1C103K	T	31.4/35.2
C146	4030017610	S.CER ECJ0EC1H090C	T	35/33.1
C147	4030016790	S.CER ECJ0EB1C103K	T	34.5/35.2
C148	4030016790	S.CER ECJ0EB1C103K	T	30.9/26.4
C149	4030016930	S.CER ECJ0EB1A104K	B	78.2/17.4
C150	4030018560	S.CER C2012 JB 1A 475K-T	B	86.9/19.8
C151	4030016930	S.CER ECJ0EB1A104K	T	112.1/46
C152	4030016930	S.CER ECJ0EB1A104K	T	109.6/34.3
C153	4030017460	S.CER ECJ0EB1E102K	T	111.4/34.3
C154	4030018860	S.CER ECJ0EB0J105K	T	82.7/19.8
C155	4030017420	S.CER ECJ0EC1H470J	T	110.3/38.7
C156	4030017910	S.CER ECJ0EB1H152K	T	104.9/42.3
C157	4030017420	S.CER ECJ0EC1H470J	T	110.8/48.6
C158	4030017430	S.CER ECJ0EC1H101J	T	110.3/37.8
C159	4030017460	S.CER ECJ0EB1E102K	T	120.3/5.5
C160	4030017460	S.CER ECJ0EB1E102K	B	130.6/25.4
C161	4030018010	S.CER ECJ0EC1H360J	T	50.8/43.8
C162	4030017590	S.CER ECJ0EC1H070C	T	52.1/43.4
C163	4030017660	S.CER ECJ0EC1H330J	T	58.7/39.4
C164	4030017660	S.CER ECJ0EC1H330J	T	48.6/45.8
C165	4030017660	S.CER ECJ0EC1H330J	T	49.9/45.4
C166	4030017580	S.CER ECJ0EC1H060C	T	60.1/38.9
C167	4030017420	S.CER ECJ0EC1H470J	T	70/38.9
C168	4030017660	S.CER ECJ0EC1H330J	T	59.1/40.8
C169	4030017660	S.CER ECJ0EC1H330J	T	60.7/40.4
C170	4030017550	S.CER ECJ0EC1H1R5B	T	70.4/36.6
C171	4030017570	S.CER ECJ0EC1H040B	T	70/37.9
C172	4030017400	S.CER ECJ0EC1H220J	T	70/42.9
C173	4030017400	S.CER ECJ0EC1H220J	T	70/43.9
C174	4030017640	S.CER ECJ0EC1H150J	T	38.3/38.8
C175	4030016790	S.CER ECJ0EB1C103K	B	41.4/39.4
C176	4030016930	S.CER ECJ0EB1A104K	B	41/33.2
C177	4030017730	S.CER ECJ0EB1E471K	B	41/32.2
C178	4030016790	S.CER ECJ0EB1C103K	B	34.5/33
C180	4030017740	S.CER ECJ0EB1E821K	T	109.2/48.6
C181	4030016930	S.CER ECJ0EB1A104K	T	112.1/43.2
C182	4030016780	S.CER ECJ0EB1C153K	T	112.1/39.6
C183	4030017420	S.CER ECJ0EC1H470J	T	104.9/45
C184	4030017760	S.CER ECJ0EB1H222K	T	104.9/45.9
C185	4030017690	S.CER ECJ0EC1H121J	T	107.8/48.6
C186	4030016790	S.CER ECJ0EB1C103K	T	51.7/45.4
C187	4030017460	S.CER ECJ0EB1E102K	T	52.6/45.4
C188	4030016790	S.CER ECJ0EB1C103K	T	62.7/40.4
C189	4030017460	S.CER ECJ0EB1E102K	T	63.7/40.4
C190	4030017540	S.CER ECJ0EC1HR75B	T	55/48.3
C191	4030016790	S.CER ECJ0EB1C103K	T	70/40.9
C192	4030017540	S.CER ECJ0EC1HR75B	T	57.7/43
C193	4030017460	S.CER ECJ0EB1E102K	T	70/39.9
C194	4030017530	S.CER ECJ0EC1H0R5B	T	60/44.4
C195	4030016930	S.CER ECJ0EB1A104K	B	39/30
C196	4030017730	S.CER ECJ0EB1E471K	B	38.1/33.2
C197	4030016930	S.CER ECJ0EB1A104K	B	38.1/32.2
C198	4030017730	S.CER ECJ0EB1E471K	B	31.3/38.3
C199	4030016930	S.CER ECJ0EB1A104K	B	31.3/39.2
C200	4030016930	S.CER ECJ0EB1A104K	B	31.3/34
C201	4030017730	S.CER ECJ0EB1E471K	B	31.3/33.1
C202	4030017460	S.CER ECJ0EB1E102K	T	112.1/38.7
C203	4030017460	S.CER ECJ0EB1E102K	B	100.9/47
C205	4030018900	S.CER ECJ0EB0J474K	T	78.4/18.4
C206	4030016930	S.CER ECJ0EB1A104K	T	78.5/16.7
C207	4030017730	S.CER ECJ0EB1E471K	T	61/45.7
C208	4030017460	S.CER ECJ0EB1E102K	T	60/45.7
C209	4030017460	S.CER ECJ0EB1E102K	B	65/52.7
C210	4030017590	S.CER ECJ0EC1H070C	B	57.6/50.3
C211	4030017620	S.CER ECJ0EC1H100C	B	60/51.4
C212	4030017460	S.CER ECJ0EB1E102K	B	63.8/50.8
C214	4030017460	S.CER ECJ0EB1E102K	B	66.8/41.3
C215	4030017390	S.CER ECJ0EC1H180J	B	38.5/47.6
C216	4030017660	S.CER ECJ0EC1H330J	B	43.1/47.6
C217	4030017730	S.CER ECJ0EB1E471K	B	25/32.7

[MAIN-A UNIT] (MDC compatible)

REF NO.	PARTS NO.	DESCRIPTION	M.	H/V LOCATION
C218	4030016930	S.CER ECJ0EB1A104K	B	25/31.7
C219	4030017650	S.CER ECJ0EC1H270J	B	23/36.3
C220	4030017600	S.CER ECJ0EC1H080C	B	23/38
C221	4030016930	S.CER ECJ0EB1A104K	B	5.6/23.2
C222	4030017030	S.CER ECJ0EB1A273K	B	128.6/45.3
C223	4030016930	S.CER ECJ0EB1A104K	B	126.3/48.2
C224	4030017640	S.CER ECJ0EC1H150J	T	124.2/40.1
C225	4030016790	S.CER ECJ0EB1C103K	T	124.2/37.4
C226	4030017580	S.CER ECJ0EC1H060C	T	124.2/41.1
C227	4030017460	S.CER ECJ0EB1E102K	B	57.6/53.5
C228	4030017460	S.CER ECJ0EB1E102K	B	56.4/53.1
C229	4030017620	S.CER ECJ0EC1H100C	B	52.1/53.1
C230	4030017460	S.CER ECJ0EB1E102K	B	63.5/62.3
C231	4030017360	S.CER ECJ0EC1H030B	B	66.3/52.2
C232	4030017460	S.CER ECJ0EB1E102K	B	68.6/49.5
C235	4030017460	S.CER ECJ0EB1E102K	B	44.4/50.7
C236	4030017390	S.CER ECJ0EC1H180J	B	47.8/48.1
C237	4030017620	S.CER ECJ0EC1H100C	B	47.4/49.4
C240	4030017460	S.CER ECJ0EB1E102K	B	18.9/34.4
C241	4030017570	S.CER ECJ0EC1H040B [B]	B	17/37.7
	4030017360	S.CER ECJ0EC1H030B [F]		
	4030017360	S.CER ECJ0EC1H030B [D]		
	4030017570	S.CER ECJ0EC1H040B [G]		
	4030017360	S.CER ECJ0EC1H030B [J]		
	4030017570	S.CER ECJ0EC1H040B [H]		
	4030017570	S.CER ECJ0EC1H040B [I]		
C242	4030017460	S.CER ECJ0EB1E102K	B	15/34.4
C243	4030017460	S.CER ECJ0EB1E102K	B	18.9/33.5
C244	4030017460	S.CER ECJ0EB1E102K	B	15.7/31.7
C245	4550006780	S.TAN TEESVB2 0J 476M8R	B	5.6/18.7
C246	4030016930	S.CER ECJ0EB1A104K	B	105.1/52.2
C247	4030016930	S.CER ECJ0EB1A104K	B	107/52.9
C248	4030016930	S.CER ECJ0EB1A104K	B	108.1/52
C249	4030018900	S.CER ECJ0EB0J474K	B	121.8/47.4
C250	4030017630	S.CER ECJ0EC1H120J	T	120.4/40.1
C251	4030017400	S.CER ECJ0EC1H220J	B	61.9/64.2
C252	4030017420	S.CER ECJ0EC1H470J	B	62.6/71.1
C253	4030017730	S.CER ECJ0EB1E471K	B	61.6/71.1
C254	4030017420	S.CER ECJ0EC1H470J	B	63.9/69.5
C256	4030017460	S.CER ECJ0EB1E102K	B	59.7/65.5
C257	4030017460	S.CER ECJ0EB1E102K	B	63.4/67.4
C258	4030017460	S.CER ECJ0EB1E102K	T	13.9/32.5
C259	4030017460	S.CER ECJ0EB1E102K	T	10/35
C260	4030017590	S.CER ECJ0EC1H070C	B	14.2/36.3
C261	4030017460	S.CER ECJ0EB1E102K	B	9.5/33.9
C262	4030017460	S.CER ECJ0EB1E102K	B	13.7/37.7
C263	4030017490	S.CER C1608 JB 1A 105K-T	T	14.1/33.7
C264	4030017350	S.CER ECJ0EC1H020B	B	8.4/38.6
C265	4030017420	S.CER ECJ0EC1H470J [F]	B	8.6/36.3
	4030017420	S.CER ECJ0EC1H470J [D]		
	4030017420	S.CER ECJ0EC1H470J [J]		
C266	4030017460	S.CER ECJ0EB1E102K [F]	B	9.5/36.3
	4030017460	S.CER ECJ0EB1E102K [D]		
	4030017460	S.CER ECJ0EB1E102K [J]		
C267	4030017460	S.CER ECJ0EB1E102K	B	63.9/70.5
C268	4030017640	S.CER ECJ0EC1H150J	B	68.2/69.1
C269	4030017390	S.CER ECJ0EC1H180J [B]	B	69.7/69.1
	4030017650	S.CER ECJ0EC1H270J [F]		
	4030017650	S.CER ECJ0EC1H270J [D]		
	4030017390	S.CER ECJ0EC1H180J [G]		
	4030017650	S.CER ECJ0EC1H270J [J]		
	4030017390	S.CER ECJ0EC1H180J [H]		
	4030017390	S.CER ECJ0EC1H180J [I]		
C270	4030017390	S.CER ECJ0EC1H180J	B	71.2/69
C271	4030017400	S.CER ECJ0EC1H220J [B]	T	74.3/71.7
	4030017390	S.CER ECJ0EC1H180J [F]		
	4030017390	S.CER ECJ0EC1H180J [D]		
	4030017400	S.CER ECJ0EC1H220J [G]		
	4030017390	S.CER ECJ0EC1H180J [J]		
	4030017400	S.CER ECJ0EC1H220J [H]		
	4030017400	S.CER ECJ0EC1H220J [I]		
C272	4030016930	S.CER ECJ0EB1A104K	T	7.9/39.5
C273	4030016930	S.CER ECJ0EB1A104K	T	9.5/39.5
C274	4030017460	S.CER ECJ0EB1E102K	T	7.4/41.2
C275	4030016930	S.CER ECJ0EB1A104K	T	15/41
C276	4030017620	S.CER ECJ0EC1H100C	B	10.5/41
C277	4030017460	S.CER ECJ0EB1E102K	T	14/41
C278	4030017340	S.CER ECJ0EC1H010B	B	8.9/43.6
C279	4030017640	S.CER ECJ0EC1H150J	B	6.9/44.2
C280	4030017550	S.CER ECJ0EC1H1R5B	B	9.4/46.1
C281	4030017420	S.CER ECJ0EC1H470J	T	97.9/34.2
C282	4030017420	S.CER ECJ0EC1H470J	T	102.1/40
C283	4030017420	S.CER ECJ0EC1H470J	B	97.4/44.6
C284	4030017420	S.CER ECJ0EC1H470J	T	94.8/35.5
C285	4030017420	S.CER ECJ0EC1H470J	B	94.2/44.4
C286	4030017420	S.CER ECJ0EC1H470J	T	92.1/43.3
C287	4030017420	S.CER ECJ0EC1H470J	T	92.1/41.6
C288	4030017460	S.CER ECJ0EB1E102K	B	4.8/46.5
C289	4030017640	S.CER ECJ0EC1H150J [B]	B	6.6/34.2
	4030017640	S.CER ECJ0EC1H150J [G]		
	4030017640	S.CER ECJ0EC1H150J [H]		
	4030017640	S.CER ECJ0EC1H150J [I]		
C290	4030017400	S.CER ECJ0EC1H220J	T	74.3/73.6
C291	4030017730	S.CER ECJ0EB1E471K	T	69.3/76.1
C292	4550000560	S.TAN TEESVA 1V 334M8R	T	67.6/74.4
C294	4030017420	S.CER ECJ0EC1H470J	T	70.4/76.1
C295	4030017420	S.CER ECJ0EC1H470J	T	56.7/67.3
C296	4510008530	S.ELE EEE1HA2R2SR	T	59.6/80
C297	4030017460	S.CER ECJ0EB1E102K	T	56.7/68.3
C299	4030017640	S.CER ECJ0EC1H150J	B	6.9/47.9
C301	4030017580	S.CER ECJ0EC1H060C	B	13.2/49.5
C302	4030017460	S.CER ECJ0EB1E102K	B	4.4/44.4
C303	4030016930	S.CER ECJ0EB1A104K	B	129.6/32
C304	4030017420	S.CER ECJ0EC1H470J	B	90/43.4

M.=Mounted side (T: Mounted on the Top side, B: Mounted on the Bottom side)
S.=Surface mount

[MAIN-A UNIT] (MDC compatible)

REF NO.	PARTS NO.	DESCRIPTION	M.	H/V LOCATION
C305	4030011140	S.CER GRM31M2C2H120JV01L (GRM42-6 CH)	T	27.6/78.7
C306	4030011120	S.CER GRM31M2C2H100JV01L (GRM42-6 CH)	T	27.6/76.1
C307	4030011120	S.CER GRM31M2C2H100JV01L (GRM42-6 CH)	T	27.7/71.8
C308	4030011070	S.CER GRM31M2C2H5R0CY21L (GRM42-6 CH) [B]	T	27.7/69.2
	4030011140	S.CER GRM31M2C2H120JV01L (GRM42-6 CH) [F]		
	4030011140	S.CER GRM31M2C2H120JV01L (GRM42-6 CH) [D]		
	4030011070	S.CER GRM31M2C2H5R0CY21L (GRM42-6 CH) [G]		
	4030011140	S.CER GRM31M2C2H120JV01L (GRM42-6 CH) [J]		
	4030011070	S.CER GRM31M2C2H5R0CY21L (GRM42-6 CH) [H]		
	4030011070	S.CER GRM31M2C2H5R0CY21L (GRM42-6 CH) [I]		
C309	4030017460	S.CER ECJ0EB1E102K	T	71.5/76.1
C310	4030017420	S.CER ECJ0EC1H470J	T	43/76.1
C311	4030017460	S.CER ECJ0EB1E102K	T	44.1/76.1
C312	4030017730	S.CER ECJ0EB1E471K	T	45.3/76.1
C313	4510008680	S.ELE EEE1EA220SP	T	51.7/77.7
C314	4030017730	S.CER ECJ0EB1E471K	B	40.2/68.3
C315	4030017460	S.CER ECJ0EB1E102K	T	55.7/73.6
C316	4030016790	S.CER ECJ0EB1C103K	T	54.1/72.6
C317	4030011600	S.CER C1608 JB 1E 104K-T	T	54.1/67
C318	4030017460	S.CER ECJ0EB1E102K [B]	T	35.1/63.3
	4030017460	S.CER ECJ0EB1E102K [G]		
	4030017460	S.CER ECJ0EB1E102K [H]		
	4030017460	S.CER ECJ0EB1E102K [I]		
C319	4030017460	S.CER ECJ0EB1E102K [B]	T	47.3/67.4
	4030017460	S.CER ECJ0EB1E102K [G]		
	4030017460	S.CER ECJ0EB1E102K [H]		
	4030017460	S.CER ECJ0EB1E102K [I]		
C320	4030017580	S.CER ECJ0EC1H060C	B	15/52.7
C321	4030017460	S.CER ECJ0EB1E102K	B	14.9/49.5
C322	4030017600	S.CER ECJ0EC1H080C	B	19.3/52
C323	4030017570	S.CER ECJ0EC1H040B	B	20/49.6
C324	4030017420	S.CER ECJ0EC1H470J	B	90/41.8
C325	4030017460	S.CER ECJ0EB1E102K	T	72.5/64.9
C326	4030017420	S.CER ECJ0EC1H470J	B	46.2/64.3
C327	4030017460	S.CER ECJ0EB1E102K	B	84.2/79
C328	4030017460	S.CER ECJ0EB1E102K	B	83.2/79
C329	4030017460	S.CER ECJ0EB1E102K	B	82.1/79
C330	4030017460	S.CER ECJ0EB1E102K	B	81/79
C331	4030017460	S.CER ECJ0EB1E102K	B	80/79
C332	4030016930	S.CER ECJ0EB1A104K	T	51.9/71.9
C334	4030017460	S.CER ECJ0EB1E102K	T	49.5/68.6
C335	4030017460	S.CER ECJ0EB1E102K	T	53.8/63.2
C336	4030017580	S.CER ECJ0EC1H060C	B	20.8/52
C337	4030017390	S.CER ECJ0EC1H180J	B	25.1/51.2
C338	4510008600	S.ELE EEE1CA4R7NR	T	79.1/69.1
C339	4030017460	S.CER ECJ0EB1E102K	T	79.1/62.1
C340	4030017460	S.CER ECJ0EB1E102K	T	37.5/20.8
C341	4030016790	S.CER ECJ0EB1C103K	T	41.9/19.4
C342	4030017200	S.CER GRM31BR32J102KY01L (GHM1030 R)	T	25.3/62.5
C343	4030011270	S.CER GRM31M2C2H200JV01L (GRM42-6 CH)	T	22.1/63.9
C345	4030011170	S.CER GRM31M2C2H180JV01L (GRM42-6 CH)	T	17.3/57.4
C346	4030011170	S.CER GRM31M2C2H180JV01L (GRM42-6 CH)	T	30.2/62.8
C347	4030017520	S.CER ECJ0EC1H0R3B	B	25.4/63
C348	4030017460	S.CER ECJ0EB1E102K	B	31.5/63.4
C349	4030016930	S.CER ECJ0EB1A104K	T	100.5/63.5
C350	4550005980	S.TAN TEESVA 1A 475M8R	T	101.6/62
C351	4030016930	S.CER ECJ0EB1A104K	T	110.6/67.4
C352	4030017460	S.CER ECJ0EB1E102K	B	124.6/59.6
C353	4550005980	S.TAN TEESVA 1A 475M8R	B	124.5/61.3
C354	4550006250	S.TAN TEESVA 1A 106M8R	B	112.9/61.7
C355	4030017420	S.CER ECJ0EC1H470J	B	112.6/60.1
C356	4030011270	S.CER GRM31M2C2H200JV01L (GRM42-6 CH)	T	14.7/62.9
C357	4030011270	S.CER GRM31M2C2H200JV01L (GRM42-6 CH)	T	10.4/62.9
C358	4030007030	S.CER C1608 CH 1H 150J-T	B	10.6/56.4
C359	4030011340	S.CER C1608 CH 1H 471J-T	B	9.4/56.4
C360	4030017460	S.CER ECJ0EB1E102K	B	4/53
C361	4030017460	S.CER ECJ0EB1E102K	T	103.9/53.5
C362	4030017460	S.CER ECJ0EB1E102K	T	108.2/24.5
C363	4510008540	S.ELE EEE1CA100SR	T	139.1/31.9
C365	4550007650	S.TAN F931V105MAABMA	B	106.7/65
C366	4550007650	S.TAN F931V105MAABMA	B	104.2/65
C367	4550007650	S.TAN F931V105MAABMA	B	101.6/65
C368	4550007650	S.TAN F931V105MAABMA	B	99.5/64.6
C369	4030011270	S.CER GRM31M2C2H200JV01L (GRM42-6 CH)	T	15.8/78.9
C370	4030011270	S.CER GRM31M2C2H200JV01L (GRM42-6 CH)	T	15.8/83.1
C371	4030017460	S.CER ECJ0EB1E102K	B	4.1/81.6
C372	4030006850	S.CER C1608 JB 1H 471K-T	B	8.3/77.1
C373	4030016930	S.CER ECJ0EB1A104K	B	130.9/51.7
C374	4030016930	S.CER ECJ0EB1A104K	B	133/51.3
C375	4030016930	S.CER ECJ0EB1A104K	B	132.4/54.6
C377	4030017460	S.CER ECJ0EB1E102K	T	105.9/51.9
C378	4030017460	S.CER ECJ0EB1E102K	T	108.2/78
C379	4030016930	S.CER ECJ0EB1A104K	B	108.4/80.3
C380	4030017460	S.CER ECJ0EB1E102K	T	119.9/83.2
C381	4030016790	S.CER ECJ0EB1C103K	B	135.9/70.5
C383	4030017460	S.CER ECJ0EB1E102K	B	135.9/71.5
C384	4510008870	S.ELE EEE1AA471UP	T	129.9/64.9

[MAIN-A UNIT] (MDC compatible)

REF NO.	PARTS NO.	DESCRIPTION	M.	H/V LOCATION
C386	4030016930	S.CER ECJ0EB1A104K	B	138.8/53.7
C387	4030017720	S.CER ECJ0EB1H331K	B	135.4/51.3
C388	4030018860	S.CER ECJ0EB0J105K	B	138.6/52.2
C389	4030016930	S.CER ECJ0EB1A104K	B	139.1/49.4
C390	4030016930	S.CER ECJ0EB1A104K	B	137.8/55.4
C391	4030016930	S.CER ECJ0EB1A104K	T	101.8/82.3
C392	4030017460	S.CER ECJ0EB1E102K	B	131/74.6
C393	4030017460	S.CER ECJ0EB1E102K	B	99/79
C394	4030017420	S.CER ECJ0EC1H470J	B	115.4/68
C395	4030017460	S.CER ECJ0EB1E102K	B	128.2/76.5
C397	4030017460	S.CER ECJ0EB1E102K	B	99.8/86.3
C398	4030017420	S.CER ECJ0EC1H470J	B	100.8/86.3
C399	4030018860	S.CER ECJ0EB0J105K	B	136.3/37.1
C400	4030016930	S.CER ECJ0EB1A104K	B	139.7/35.3
C411	4510008780	S.ELE EEE1EA471P	T	117.2/63.6
C412	4510008780	S.ELE EEE1EA471P	T	132.7/54.3
C413	4030018900	S.CER ECJ0EB0J474K	B	135.1/46.8
C414	4510008540	S.ELE EEE1CA100SR	T	118.7/50.5
C415	4030016930	S.CER ECJ0EB1A104K	B	103/23.8
C416	4030016930	S.CER ECJ0EB1A104K	B	120.3/51.6
C417	4030016790	S.CER ECJ0EB1C103K	B	115.6/52.8
C418	4030017460	S.CER ECJ0EB1E102K	T	109.6/54.5
C419	4030016790	S.CER ECJ0EB1C103K	T	42.9/39.2
C420	4030017420	S.CER ECJ0EC1H470J	T	41/37.4
C421	4030016930	S.CER ECJ0EB1A104K	B	36/24.7
C422	4030016790	S.CER ECJ0EB1C103K	T	43.1/31.9
C423	4030017420	S.CER ECJ0EC1H470J	T	39.9/35.3
C424	4030016930	S.CER ECJ0EB1A104K	T	38.9/32.2
C425	4030017460	S.CER ECJ0EB1E102K	B	134.8/66.1
C426	4030018860	S.CER ECJ0EB0J105K	B	110/12.1
C427	4030017460	S.CER ECJ0EB1E102K	B	109.1/10.4
C430	4030017570	S.CER ECJ0EC1H040B	T	78.2/44.8
C431	4030017590	S.CER ECJ0EC1H070C	T	23/21.9
C432	4030016930	S.CER ECJ0EB1A104K	T	22.4/10.5
C433	4030016930	S.CER ECJ0EB1A104K	B	23/7.3
C434	4030017650	S.CER ECJ0EC1H270J	B	28.3/5.6
C435	4030017040	S.CER ECJ0EB1A333K	B	29.2/7.3
C436	4030016930	S.CER ECJ0EB1A104K	B	21.2/5.6
C437	4030016930	S.CER ECJ0EB1A104K	B	27.6/8.7
C438	4030016930	S.CER ECJ0EB1A104K	B	31.6/5.7
C440	4030016930	S.CER ECJ0EB1A104K	B	22.1/8.9
C441	4030017610	S.CER ECJ0EC1H090C	B	25.9/39.5
C451	4030018860	S.CER ECJ0EB0J105K	B	93.8/6.5
J1	6510026770	S.CON AXK540147YG	T	124.5/9.7
J2	6510026770	S.CON AXK540147YG	T	101.5/9.7
J3	6510021301	S.CON 52365-1071	T	90.3/62.6
J5	6510023092	S.CON 20FLT-SM2-TB(LF)(SN)(M)	T	108.3/81.8
J7	6450000140	CON HSJ0807-01-010		
J10	6510023092	S.CON 20FLT-SM2-TB(LF)(SN)(M)	T	71/7
W1	7120000470	JUM ERDS2T0		
W2	8900016250	CAB OPC-1701 <CMI>T/H!		
EP1	6910015600	S.BEA ACZ1005Y-241 (240)	B	39.8/8.1
EP2	6910015370	S.BEA ACZ1005Y-102-T	B	50.1/12.4
EP3	6910015370	S.BEA ACZ1005Y-102-T	T	82.6/37.1
EP4	6910010280	BEA HF70BB9.5X10.4X4.9		
EP5	6910010280	BEA HF70BB9.5X10.4X4.9		
EP6	6910011560	BEA HF70BB4.5X5X1.6		

M.=Mounted side (T: Mounted on the Top side, B: Mounted on the Bottom side)
S.=Surface mount

BOARD LAYOUTS

• Other than "MDC compatible"

The combination of this side and the bottom side shows the board layout in the same configuration as the actual P.C.Board.

• CONNECT UNIT (TOP VIEW)

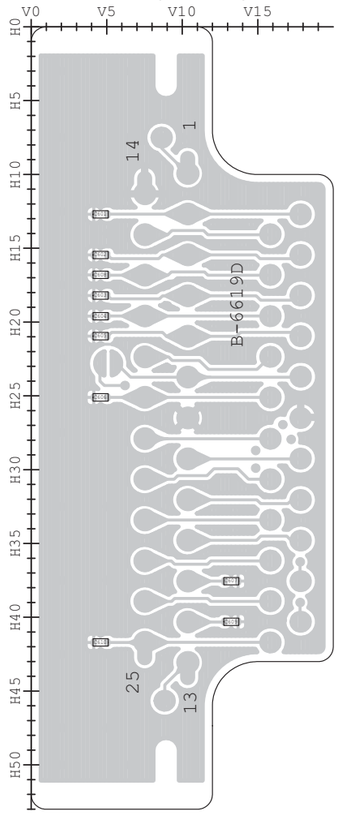

• FRONT UNIT (TOP VIEW)

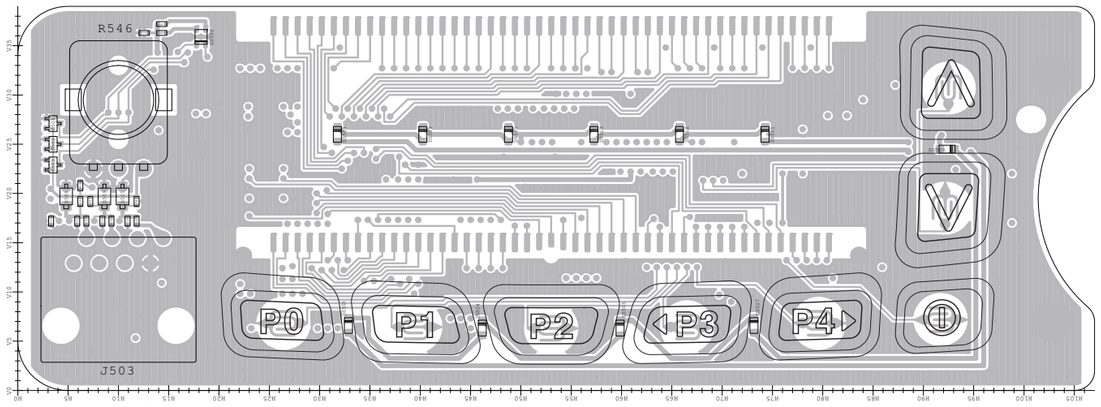

J503		
1	8V	2
	AFO	CLO
	MICE	PTT
7	GND	MIC
		CLI 8

• MAIN UNIT (TOP VIEW)

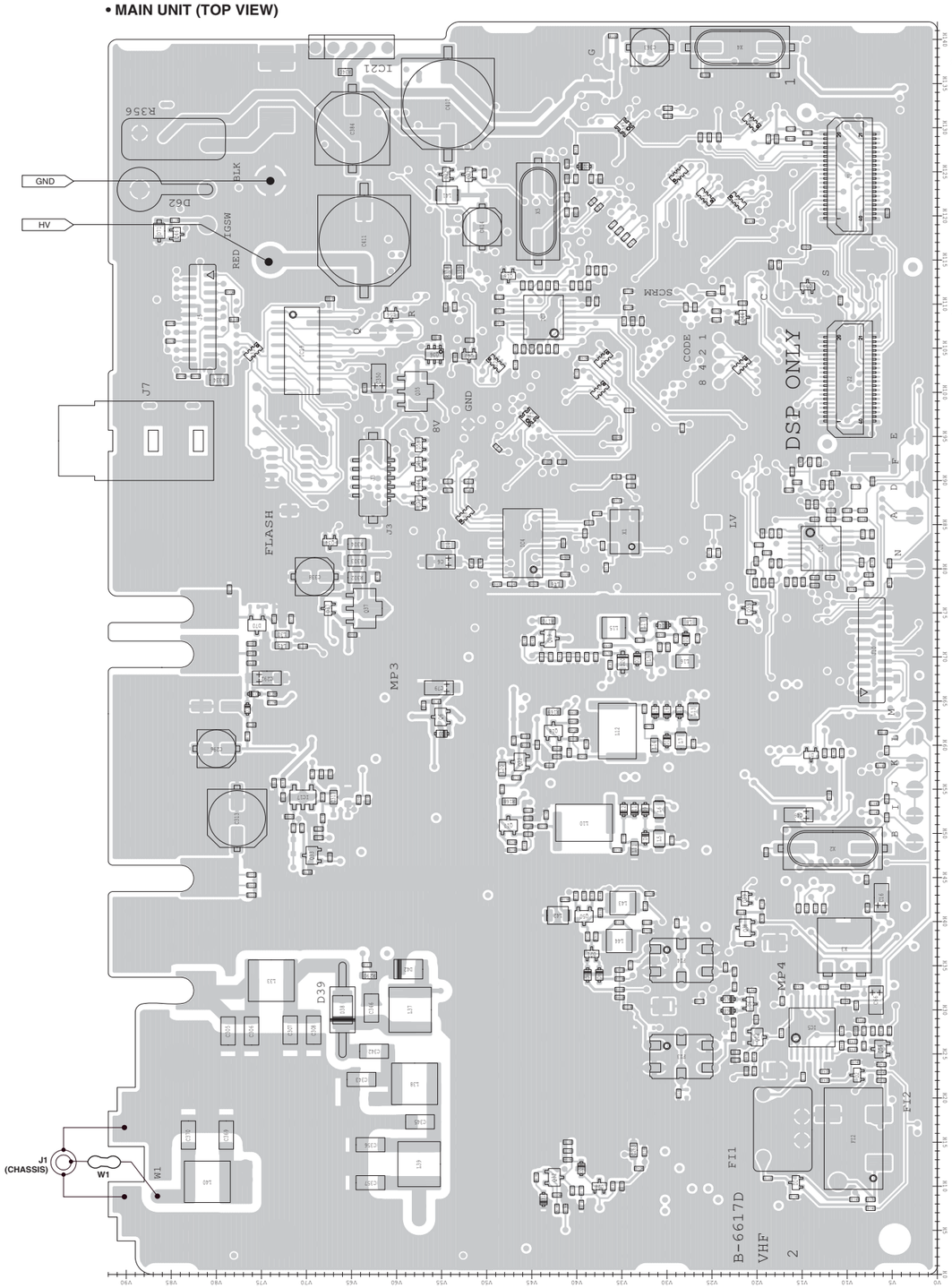

J1		
20	DASW	NC 21
	PFMF	CCK
	EMPH	CSI
	GND	CSO
	OPT3	NC
	OPT2	CIRQ
	OPT1	CCS
	SIGO	REM
	BUSY	NC
	NC	AFOUT
	NC	DISC
	NC	RMUT
	NC	BEPO
	MCIN	AFON
	NC	MMUTI
	MCOT	NC
	PTTO	VCC
	PTTI	+5V
	GND	GND
1	NC	NC 40

J2		
20	GND	GND 21
	GND	CCK
	NC	CSI
	GND	CSO
	OPT3	NC
	OPT2	CIRQ
	OPT1	CCS
	NC	NC
	NC	DAFO
	NC	NC
	VREF	DISC
	NC	NC
	DMI	NC
	NC	NC
	DMO	NC
	NC	NC
	NC	8V
	NC	+5V
	GND	GND
1	D_IF	D_IF 40

J10		
19	VCC	VCC 20
	GND	NC
	MFDA	8V
	POSW	FMDA
	MCIN	MICE
	AFO	MICE
	SP-	NC
	NC	SP-
	SP+	SP+
1	GND	GND 2

• Other than "MDC compatible"

The combination of this side and the bottom side shows the board layout in the same configuration as the actual P.C.Board.

• MAIN UNIT (BOTTOM VIEW)

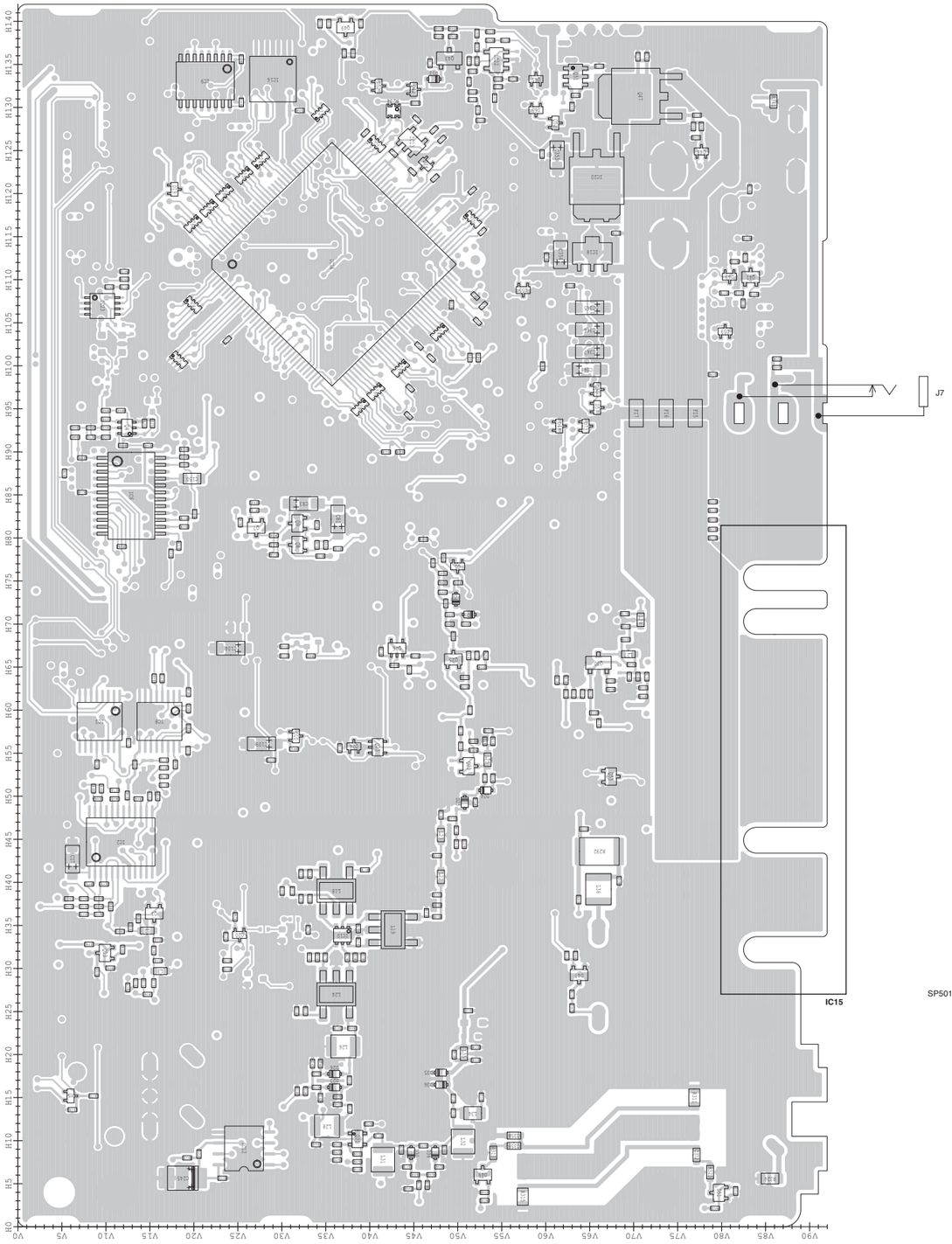

• CONNECT UNIT (BOTTOM VIEW)

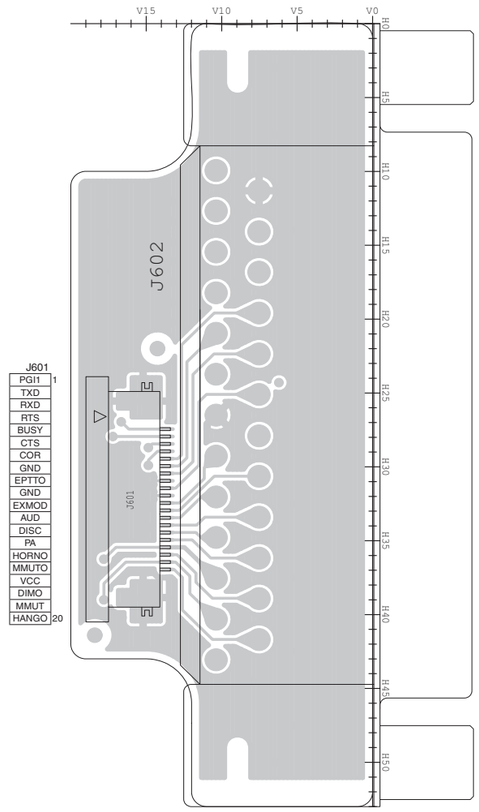

• FRONT UNIT (BOTTOM VIEW)

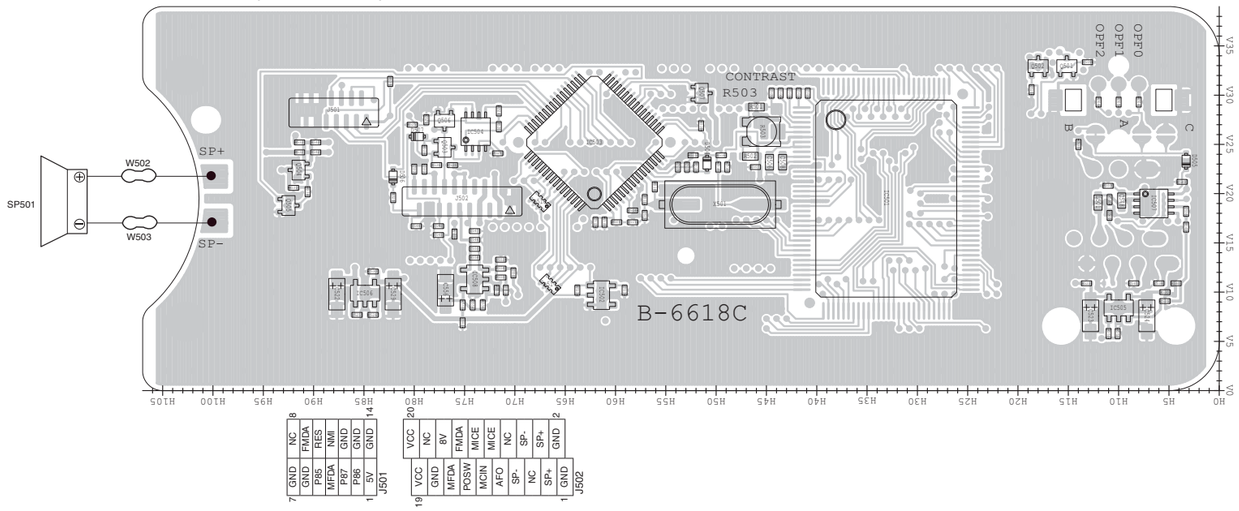

May. 2009

• MDC compatible

The combination of this side and the bottom side shows the board layout in the same configuration as the actual P.C.Board.

• CONNECT UNIT (TOP VIEW)

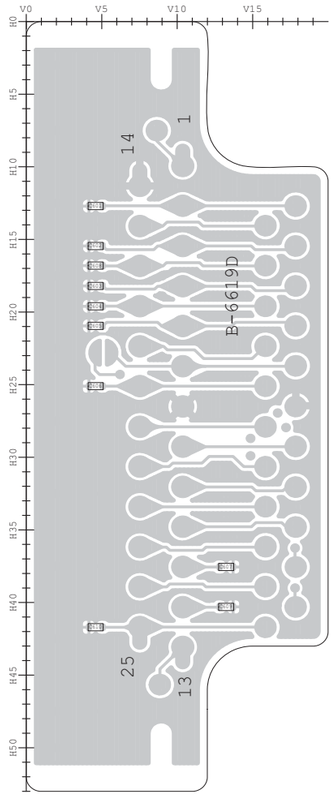

• MAIN-A UNIT (TOP VIEW)

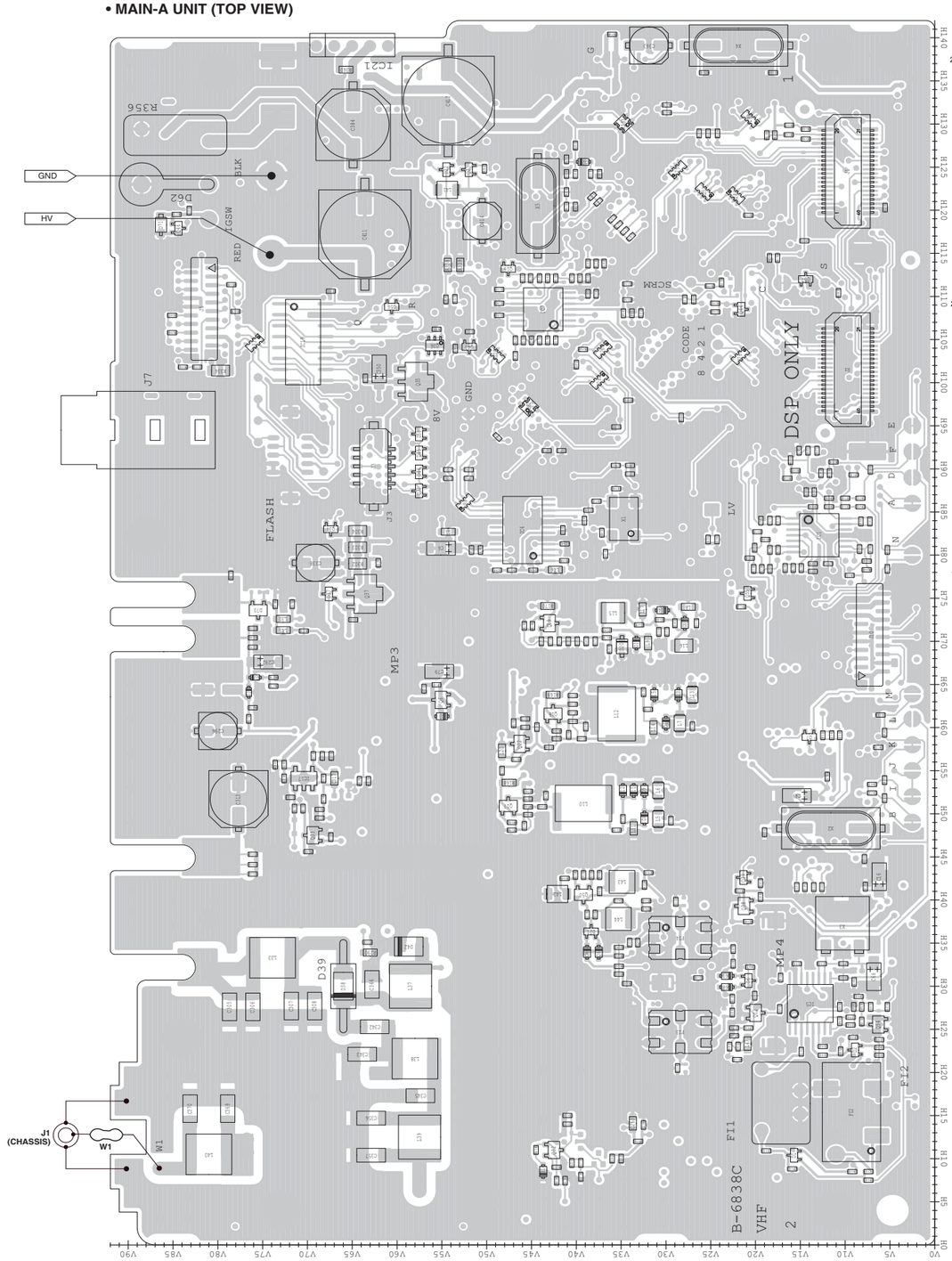

J1		
20	DASW	NC	21
	PFMF	CCK	
	EMPH	CSI	
	GND	CSO	
	OPT3	NC	
	OPT2	CIRQ	
	OPT1	CCS	
	SIGO	REM	
	BUSY	NC	
	NC	AFOUT	
	NC	DISC	
	NC	RMUT	
	NC	BEPO	
	MCIN	AFON	
	NC	MMUTI	
	MCOT	NC	
	PTTO	VCC	
	PTTI	+5V	
	GND	GND	
1	NC	NC	40

J2		
20	GND	GND	21
	GND	CCK	
	NC	CSI	
	GND	CSO	
	OPT3	NC	
	OPT2	CIRQ	
	OPT1	CCS	
	NC	NC	
	NC	DAFO	
	NC	NC	
	VREF	DISC	
	NC	NC	
	DMI	NC	
	NC	NC	
	DMO	NC	
	NC	NC	
	NC	8V	
	NC	+5V	
	GND	GND	
1	D_IF	D_IF	40

J10		
	VCC	20
19	VCC	NC
	GND	8V
	MFDA	FMDA
	POSW	MICE
	MCIN	MICE
	AFO	NC
	SP-	SP-
	NC	SP+
	SP+	GND
1	GND	2

• FRONT UNIT (TOP VIEW)

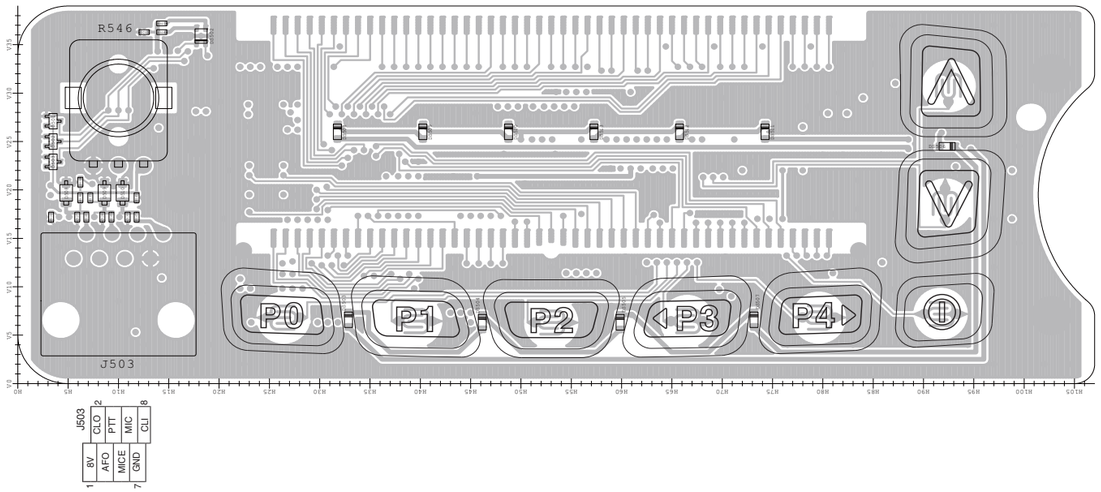

J503		
		2
	CLO	
	PTT	
	MIC	
		8
	CLI	
1	8V	
	AFO	
	MICE	
7	GND	

• MDC compatible

The combination of this side and the bottom side shows the board layout in the same configuration as the actual P.C.Board.

• MAIN-A UNIT (BOTTOM VIEW)

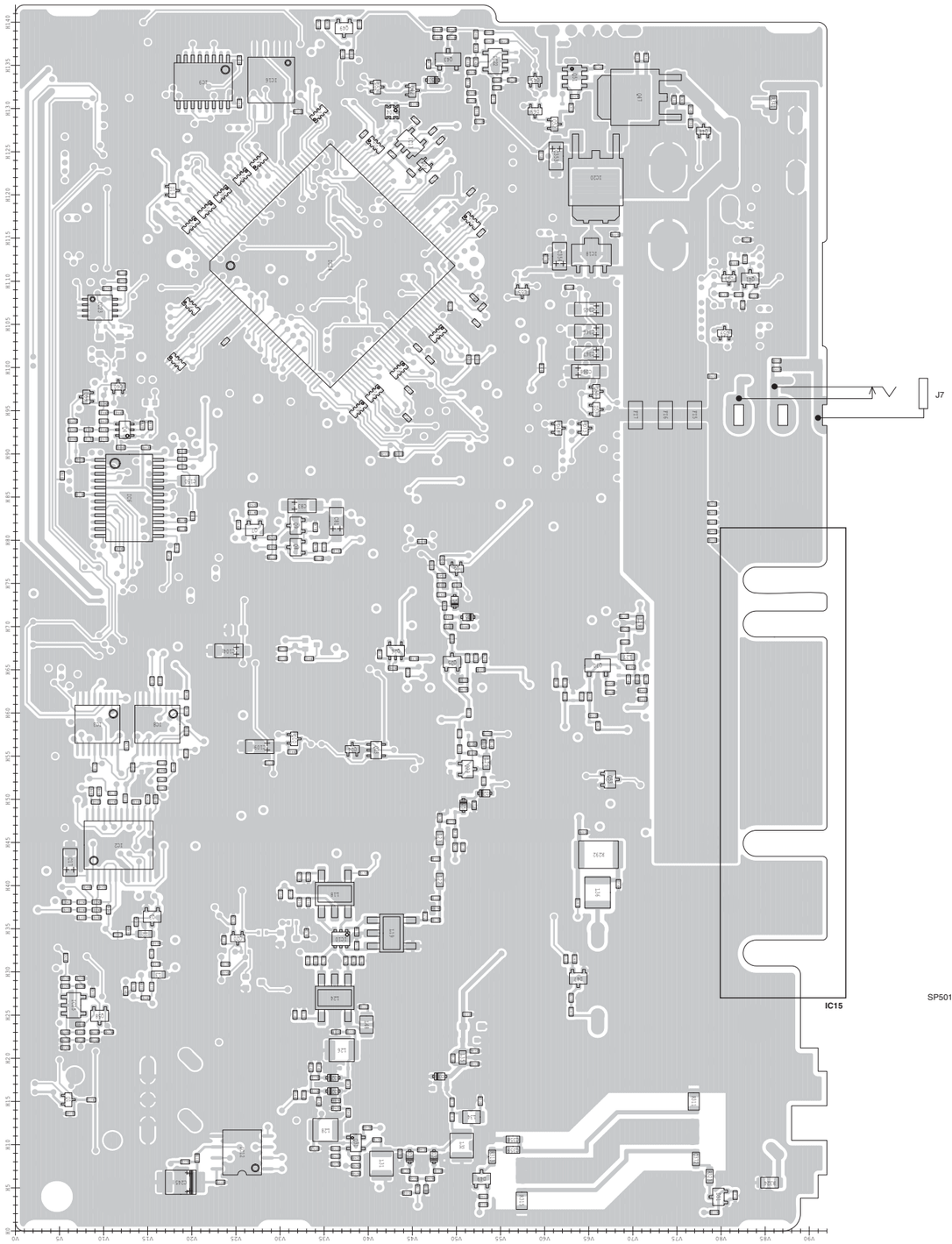

• CONNECT UNIT (BOTTOM VIEW)

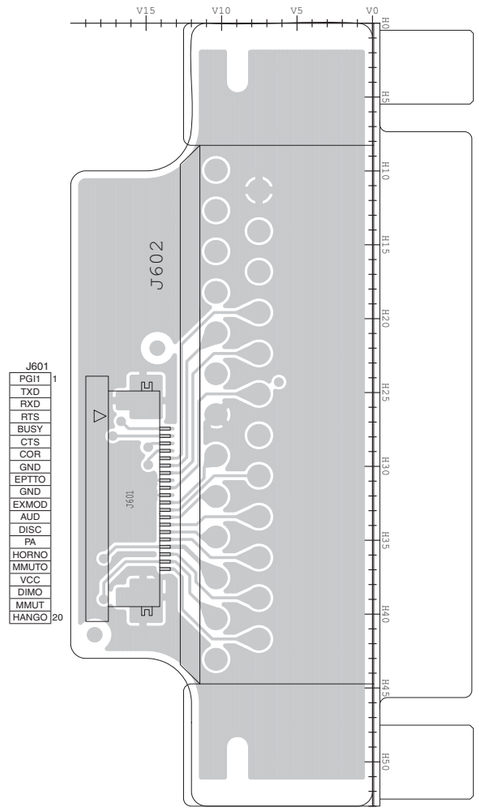

• FRONT UNIT (BOTTOM VIEW)

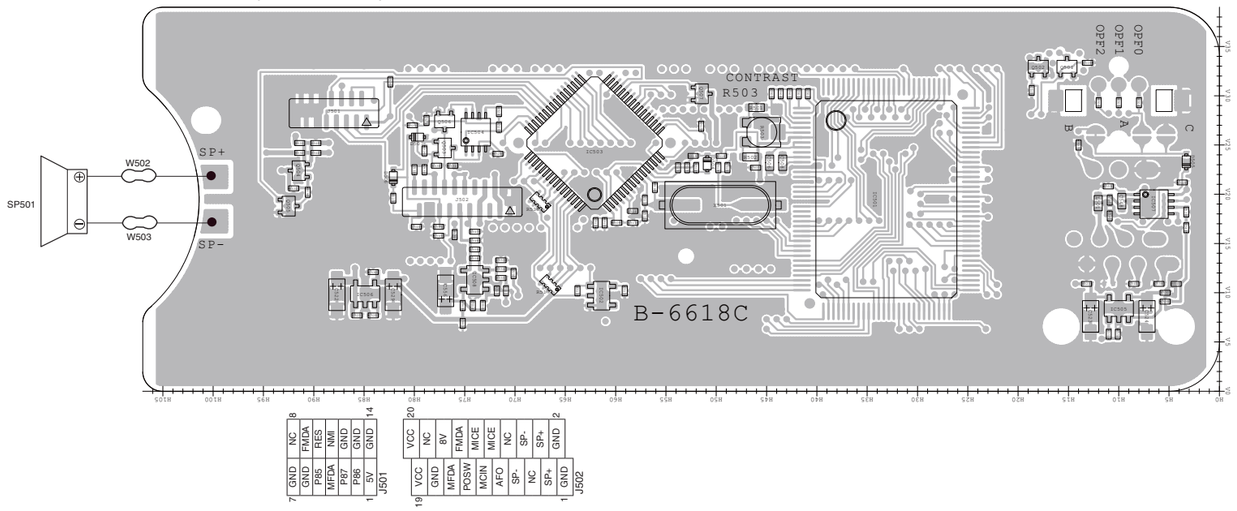

VOLTAGE DIAGRAM

FRONT UNIT

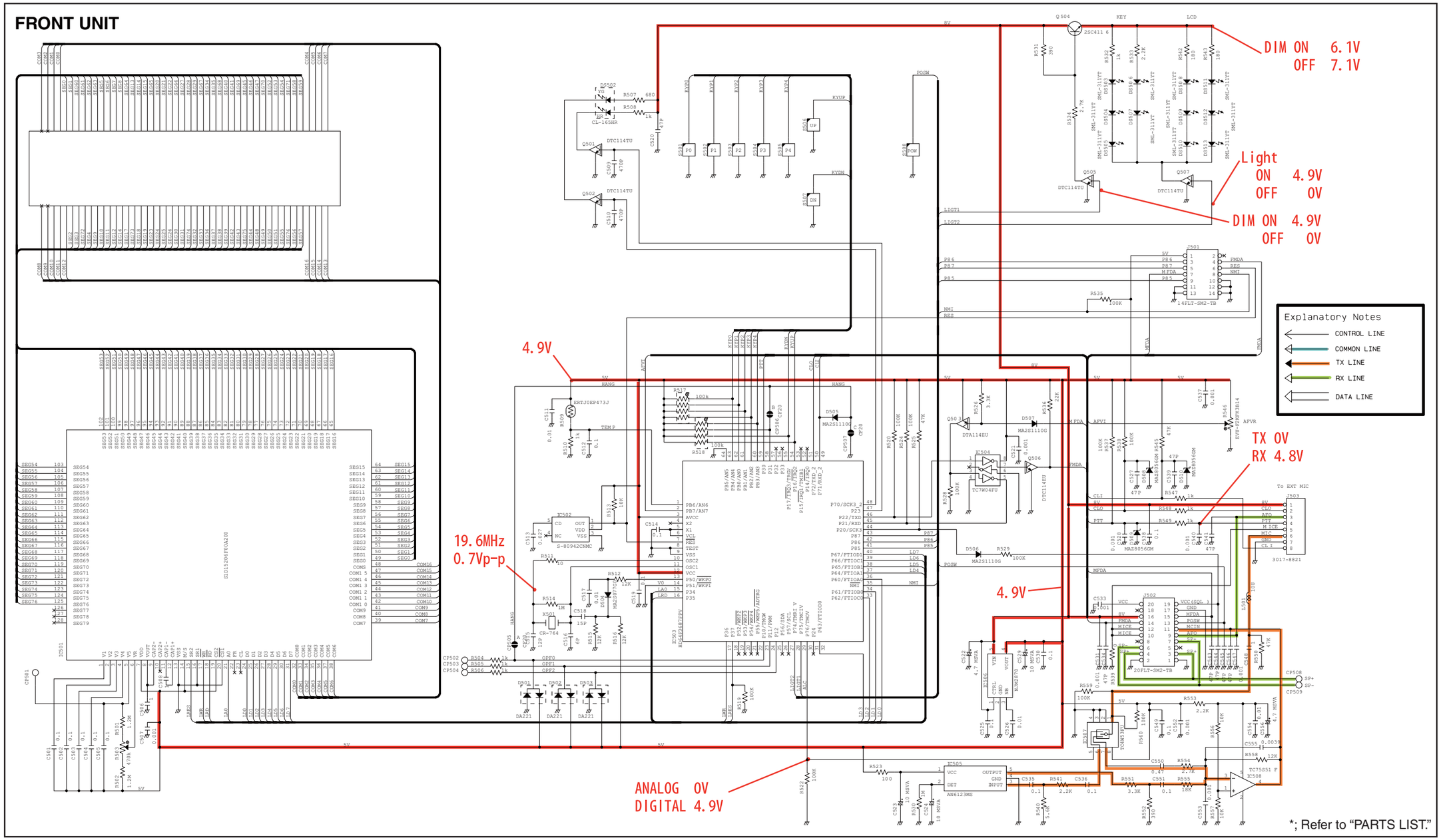

• **Other than "MDC compatible"**

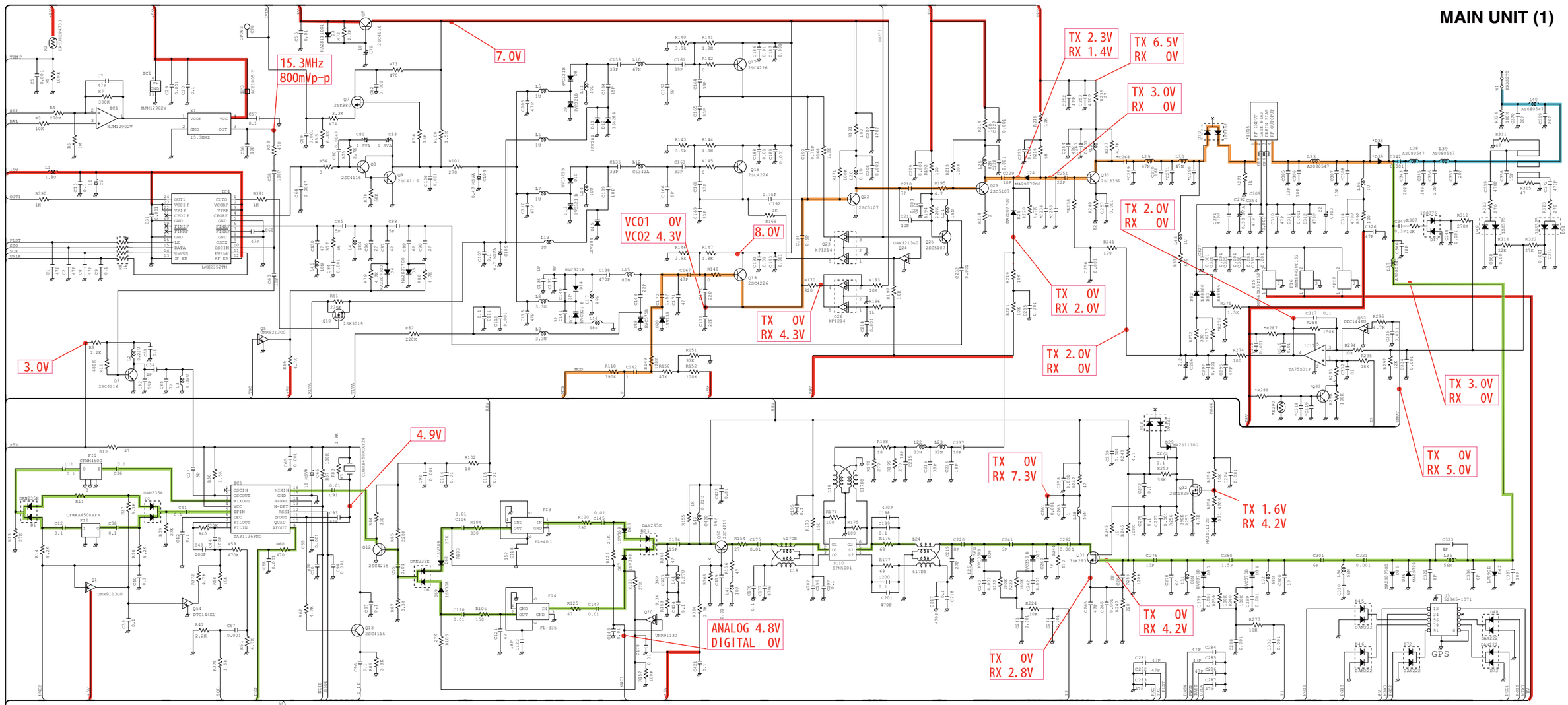

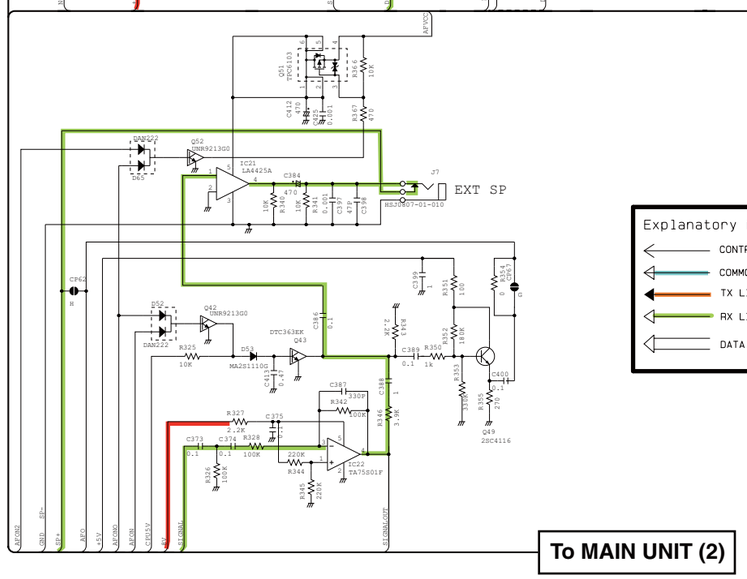

Explanatory Notes

- CONTROL LINE
- COMMON LINE
- TX LINE
- RX LINE
- DATA LINE

To MAIN UNIT (2)

*; Refer to "PARTS LIST."

• **Other than "MDC compatible"**

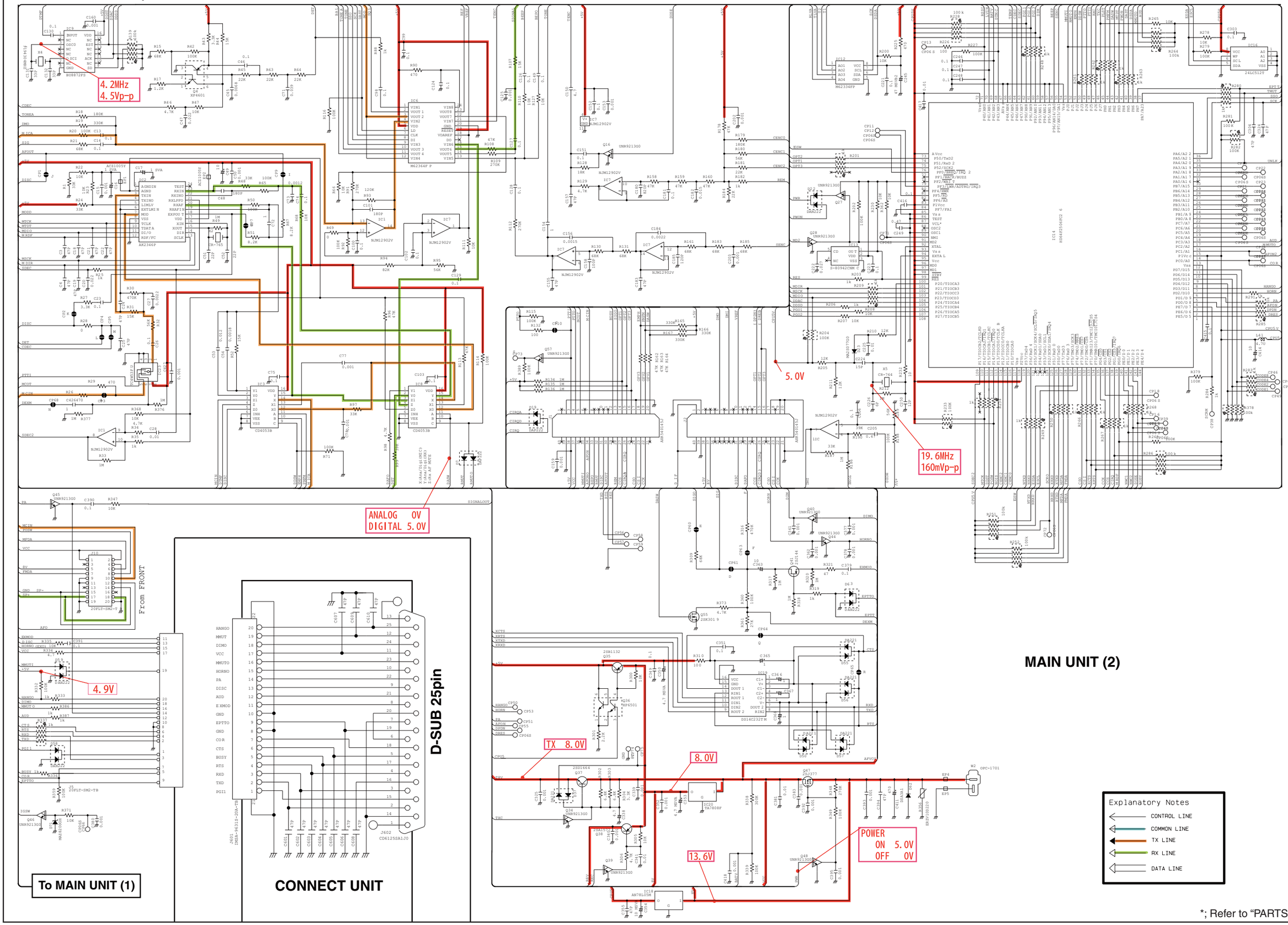

*; Refer to "PARTS LIST."

• **MDC compatible**

MAIN-A UNIT (1)

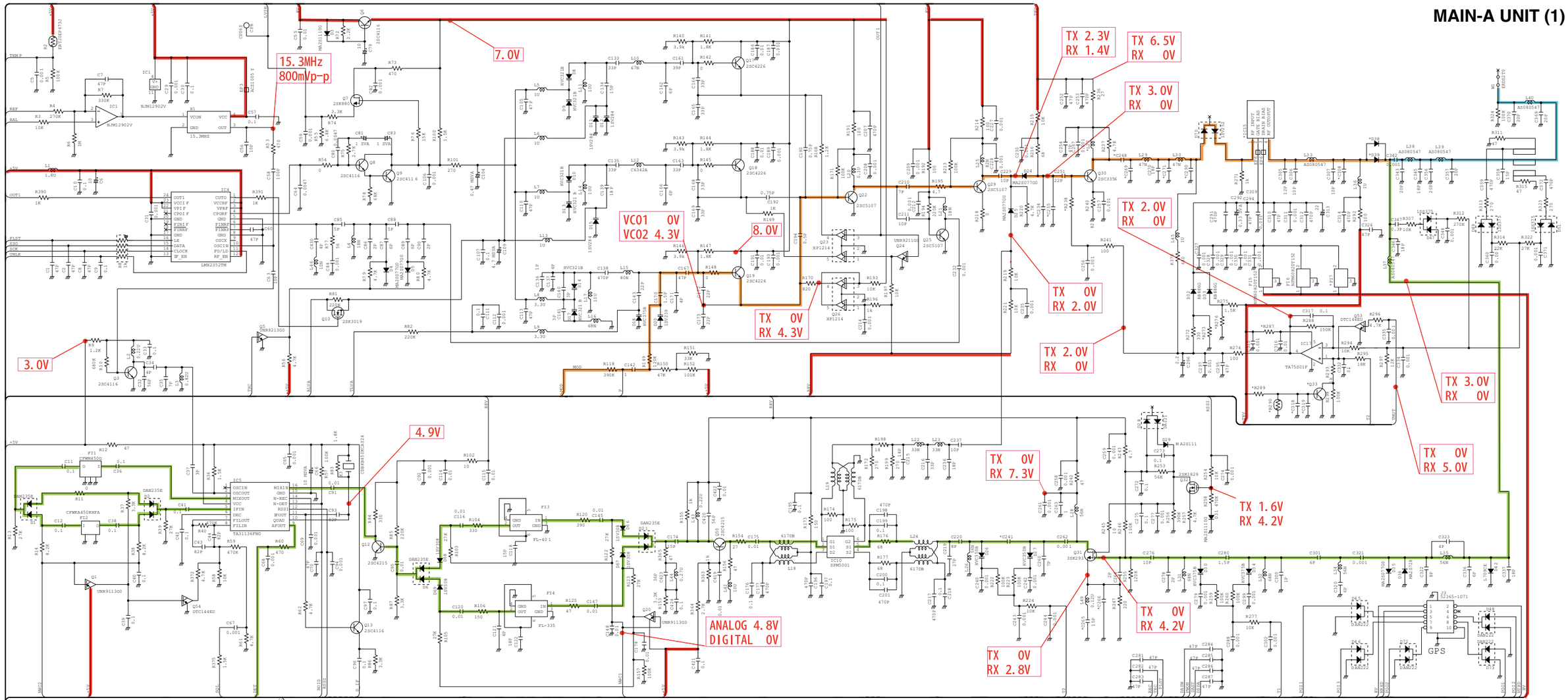

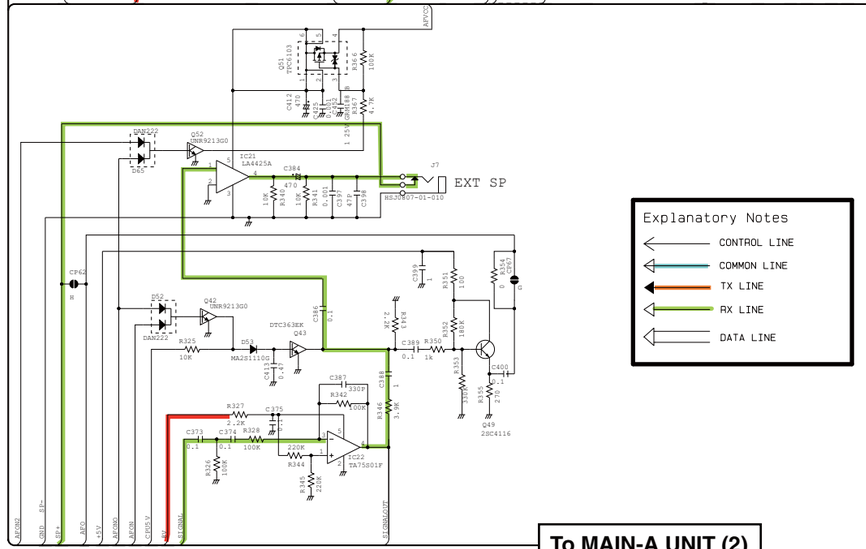

Explanatory Notes

- CONTROL LINE
- COMMON LINE
- TX LINE
- RX LINE
- DATA LINE

To MAIN-A UNIT (2)

• **MDC compatible**

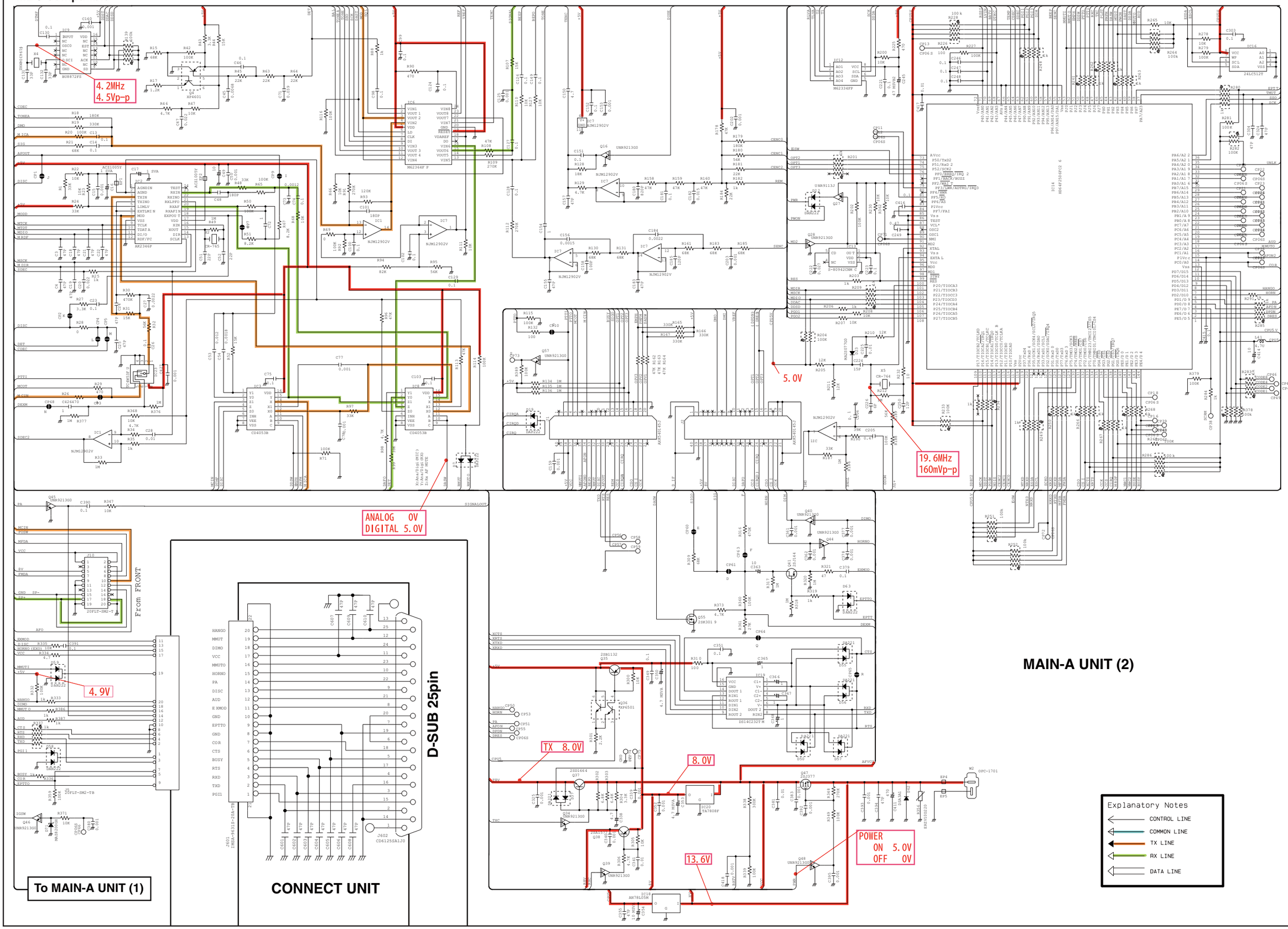

Sep. 2008

SERVICE MANUAL ADDENDUM

IC-F5061 IC-F5062 IC-F5063 IC-F5061D

CONTENTS

Replacement pages 6-6, 6-7

MODEL	VERSION	CHANNEL SPACING	TX POWER	MDC	UT-126H already installed
IC-F5061	USA-01	15.0/30.0 kHz	50 W	Not compatible	No
	USA-02			Compatible	
IC-F5062	EXP-01	12.5/25.0 kHz	25 W	Not compatible	
	EXP-02			Compatible	
IC-F5063	EUR-01	12.5/20/25.0 kHz		Not compatible	
	EUR-02			Compatible	
IC-F5061D	USA-01	6.25/15.0/30.0 kHz	50 W	Compatible	Yes
	USA-11				
	USA-12				

6-4 RECEIVE ADJUSTMENT (For other than F5061D and [USA-02])

Select an adjustment item using [↑] / [↓] keys, then set to the specified value using [←] / [→] keys on the connected PC's keyboard.

ADJUSTMENT		ADJUSTMENT CONDITION	LOCATION	VALUE
RECEIVE SENSITIVITY [BPF C (T1)] [BPF C (T2)]	**NOTE:** "RECEIVE SENSITIVITY" must be adjusted before "S-METER." Otherwise, "S-METER" will not be adjusted properly.			
	1	• Channel : CH 3 (Except [EXP-02], [EUR-02]) CH 2 ([EXP-02], [EUR-02]) • Connect the SSG to the antenna connector and set as; Frequency : 136.000 MHz (Except [EXP-02], [EUR-02]) 174.000 MHz ([EXP-02], [EUR-02]) Level : +20 dBμ† (–87 dBm) Modulation : 1 kHz Deviation : ±3.5 kHz • Receiving	Connect the SINAD meter with an 4 Ω load to the SP jack.	Minimum distortion level
S-METER (S3 level) [RSSI]	1	• Channel : CH 3 • Connect the SSG to the antenna connector and set as; Frequency : 136.000 MHz Level : +23 dBμ† (–84 dBm) Modulation : 1 kHz Deviation : ±3.5 kHz • Receiving	Push the [ENTER] key on the connected PC's keyboard to set "S3" level.	
(S1 level)	2	• Set the SSG as; Level : –7 dBμ† (–114 dBm) • Receiving	Push the [ENTER] key again to set "S1" level.	
SQUELCH [SQL]	1	• Channel : CH 3 • SQL : "2" • Close the squelch by adjusting the value of [SQL] item on the CS-F5060 ADJ's screen. • Connect the SSG to the antenna connector and set as; Frequency : 136.000 MHz Level : –13 dBμ† (–120 dBm) Modulation : 1 kHz Deviation : ±3.5 kHz • Receiving	Connect an 4 Ω speaker to the SP jack.	Close the squelch by increase the value of [SQL]. Set the [SQL] to the value that the audio signals just appear.

†; The output level of the standard signal generator (SSG) is indicated as the SSG's open circuit.

6-4 RECEIVE ADJUSTMENT (For F5061D and [USA-02])

Select an adjustment item using [↑] / [↓] keys, then set to the specified value using [←] / [→] keys on the connected PC's keyboard.

ADJUSTMENT		ADJUSTMENT CONDITION	LOCATION	VALUE
RECEIVE SENSITIVITY [BPF C (T1)]	**NOTE:** "RECEIVE SENSITIVITY" must be adjusted before "S-METER." Otherwise, "S-METER" will not be adjusted properly.			
	1	• Channel : CH 3 • Connect the SSG to the antenna connector and set as; Frequency : 136.000 MHz Level : +20 dBμ† (–87 dBm) Modulation : 1 kHz Deviation : ±3.5 kHz • Receiving	Connect the SINAD meter with an 4 Ω load to the SP jack.	Minimum distortion level
S-METER (S3 level) [RSSI]	1	• Channel : CH 4 • Connect the SSG to the antenna connector and set as; Frequency : 155.000 MHz Level : +23 dBμ† (–84 dBm) Modulation : 1 kHz Deviation : ±3.5 kHz • Receiving	Push the [ENTER] key on the connected PC's keyboard to set "S3" level.	
(S1 level)	2	• Set the SSG as; Level : –7 dBμ† (–114 dBm) • Receiving	Push the [ENTER] key again to set "S1" level.	
SQUELCH [SQL]	1	• Channel : CH 4 • SQL : "2" • Close the squelch by adjusting the value of [SQL] item on the CS-F5060 ADJ's screen. • Connect the SSG to the antenna connector and set as; Frequency : 155.000 MHz Level : –13 dBμ† (–120 dBm) Modulation : 1 kHz Deviation : ±3.5 kHz • Receiving	Connect an 4 Ω speaker to the SP jack.	Close the squelch by increase the value of [SQL]. Set the [SQL] to the value that the audio signals just appear.

†; The output level of the standard signal generator (SSG) is indicated as the SSG's open circuit.

Jul. 2008

SERVICE MANUAL ADDENDUM

IC-F5061 IC-F5062 IC-F5063 IC-F5061D

CONTENTS

PARTS LIST 1
BOARD LAYOUTS 13
VOLTAGE DIAGRAM 17

MODEL	VERSION	CHANNEL SPACING	TX POWER	MDC
IC-F5061	USA-01	15.0/30.0 kHz	50 W	Not compatible
	USA-02			Compatible
IC-F5062	EXP-01	12.5/25.0 kHz	25 W	Not compatible
	EXP-02			Compatible
IC-F5063	EUR-01	12.5/20/25.0 kHz		Not compatible
	EUR-02			Compatible
IC-F5061D	USA-01	6.25/15.0/30.0 kHz	50 W	Compatible

PARTS LIST

[FRONT UNIT]

REF NO.	ORDER NO.	DESCRIPTION		M.	H/V LOCATION
IC501	1130009121	S.IC	S1D15206F00A200	B	33.1/19.5
IC502	1110005771	S.IC	S-80942CNMC-G9CT2G	B	61.4/9.7
IC503	1140010771	S.IC	HD64F3687FPV	B	62.1/25.2
IC504	1130007111	S.IC	TC7W04FU (TE12L,F)	B	73.9/26.3
IC505	1110005310	S.IC	AN6123MS	B	10/8.4
IC506	1110005350	S.IC	NJM2870F05-TE1	B	84.9/9.9
IC507	1130006221	S.IC	TC4W53FU (TE12L,F)	B	6.5/19
IC508	1130008561	S.IC	TC75S51F (TE85L,F)	B	74/11.3
Q501	1590001050	S.TR	DTC114TUA T106	B	15.1/32.9
Q502	1590001050	S.TR	DTC114TUA T106	B	18/32.9
Q503	1590001330	S.TR	DTA114EUA T106	B	77/24.7
Q504	1530002851	S.TR	2SC4116-BL (TE85R,F)	B	91.5/22.4
Q505	1590001050	S.TR	DTC114TUA T106	B	92.5/18.8
Q506	1590000680	S.TR	DTC114EUA T106	B	77/27.4
Q507	1590001050	S.TR	DTC114TUA T106	B	51.4/30.2
D501	1750000370	S.DIO	DA221 TL	T	3.5/27.1
D502	1750000370	S.DIO	DA221 TL	T	3.5/25
D503	1750000370	S.DIO	DA221 TL	T	3.5/22.9
D504	1790001260	S.DIO	MA2S077-(TX)	B	50.9/23.1
D505	1790001250	S.DIO	MA2S111-(TX)	B	3.3/23.3
D506	1790001250	S.DIO	MA2S111-(TX)	B	82.1/21.7
D507	1790001250	S.DIO	MA2S111-(TX)	B	79.7/25.8
D508	1790000950	S.ZEN	MA8056-M (TX)	T	4.8/19.7
D509	1790000950	S.ZEN	MA8056-M (TX)	T	8.6/19.7
D510	1790000950	S.ZEN	MA8056-M (TX)	T	10.4/19.7
X501	6050011720	S.XTL	CR-764 (19.6608 MHz)	B	49.6/18.9
L501	6200003640	S.COL	MLF1608E 100K-T	B	12/19.1
R501	7030003810	S.RES	ERJ3GEYJ 125 V (1.2 M)	B	46/28.8
R502	7030003810	S.RES	ERJ3GEYJ 125 V (1.2 M)	B	46.6/23.8
R503	7310005130	S.TRI	RH03ADCS5X (470 k)	B	45.5/26.3
R504	7030005120	S.RES	ERJ2GEJ 102 X (1 k)	B	8/29.3
R505	7030005120	S.RES	ERJ2GEJ 102 X (1 k)	B	10/29.3
R506	7030005120	S.RES	ERJ2GEJ 102 X (1 k)	B	12/29.3
R507	7030005010	S.RES	ERJ2GEJ 681 X (680)	T	14.3/37.2
R508	7030005120	S.RES	ERJ2GEJ 102 X (1 k)	T	14.3/36.3
R509	7510001730	S.TMR	ERTJOEP 473J	B	59.9/17.1
R510	7030005120	S.RES	ERJ2GEJ 102 X (1 k)	B	61.1/17.1
R511	7030005530	S.RES	ERJ2GEJ 100 X (10)	B	57.1/19.4
R512	7030008010	S.RES	ERJ2GEJ 123 X (12 k)	B	52/22.7
R513	7030005050	S.RES	ERJ2GEJ 103 X (10 k)	B	63.8/10.2
R514	7030005160	S.RES	ERJ2GEJ 105 X (1 M)	B	56.1/20.7
R515	7030008010	S.RES	ERJ2GEJ 123 X (12 k)	B	52.3/23.9
R516	7030008010	S.RES	ERJ2GEJ 123 X (12 k)	B	49.5/23.9
R517	7410001140	S.ARY	EXB28V104JX	B	66.5/10.8
R518	7410001140	S.ARY	EXB28V104JX	B	67.5/19.2
R519	7030005090	S.RES	ERJ2GEJ 104 X (100 k)	B	51.5/26.9
R520	7030005090	S.RES	ERJ2GEJ 104 X (100 k)	B	71.6/26.8
R522	7030005090	S.RES	ERJ2GEJ 104 X (100 k)	T	3.3/17.2
R523	7030004980	S.RES	ERJ2GEJ 101 X (100)	B	13.2/10.9
R524	7030005090	S.RES	ERJ2GEJ 104 X (100 k)	B	71.6/28.4
R525	7030005240	S.RES	ERJ2GEJ 473 X (47 k)	B	80.2/27
R526	7030007300	S.RES	ERJ2GEJ 332 X (3.3 k)	B	79/24.4
R528	7030005090	S.RES	ERJ2GEJ 104 X (100 k)	B	71.7/24.1
R529	7030005090	S.RES	ERJ2GEJ 104 X (100 k)	B	82.1/19.6
R530	7030005160	S.RES	ERJ2GEJ 105 X (1 M)	B	5.4/10
R531	7030009280	S.RES	ERJ2GEJ 391 X	B	92/20.6
R532	7030005120	S.RES	ERJ2GEJ 102 X (1 k)	B	91.4/24.2
R533	7030007290	S.RES	ERJ2GEJ 222 X (2.2 k)	B	91.4/25.2
R534	7030009140	S.RES	ERJ2GEJ 272 X (2.7 k)	B	90.6/20.2
R535	7030005090	S.RES	ERJ2GEJ 104 X (100 k)	B	82.4/31.4
R536	7030005220	S.RES	ERJ2GEJ 223 X (22 k)	B	77.8/22.9
R537	7030005090	S.RES	ERJ2GEJ 104 X (100 k)	T	7.2/19.2
R538	7030005090	S.RES	ERJ2GEJ 104 X (100 k)	T	6.2/19.2
R539	7030010040	S.RES	ERJ2GEJ-JPW	B	76/15.9
R540	7030009290	S.RES	ERJ2GEJ 562 X (5.6 k)	B	4.3/10.9
R541	7030007290	S.RES	ERJ2GEJ 222 X (2.2 k)	B	3.3/16.6
R542	7030009160	S.RES	ERJ2GEJ 181 X (180)	B	89.8/24.2
R543	7030009160	S.RES	ERJ2GEJ 181 X (180)	B	89.8/25.2
R545	7030005240	S.RES	ERJ2GEJ 473 X (47 k)	T	11.8/19.2
R546	7210003050	VAR	EVU-F2KFK3 B14 (10KB)		
R547	7030005120	S.RES	ERJ2GEJ 102 X (1 k)	T	11.8/17.2
R548	7030005120	S.RES	ERJ2GEJ 102 X (1 k)	T	6.8/17.2
R549	7030005120	S.RES	ERJ2GEJ 102 X (1 k)	T	9.3/17.2
R550	7030005240	S.RES	ERJ2GEJ 473 X (47 k)	B	10.9/19.4
R551	7030007300	S.RES	ERJ2GEJ 332 X (3.3 k)	B	11/5.8
R552	7030009280	S.RES	ERJ2GEJ 391 X	B	10.1/5.8
R553	7030007290	S.RES	ERJ2GEJ 222 X (2.2 k)	B	75.2/8.7
R554	7030007290	S.RES	ERJ2GEJ 222 X (2.2 k)	B	71.4/12.4
R555	7030005220	S.RES	ERJ2GEJ 223 X (22 k)	B	71.4/11.5
R556	7030005050	S.RES	ERJ2GEJ 103 X (10 k)	B	73.2/8.7
R557	7030005050	S.RES	ERJ2GEJ 103 X (10 k)	B	71.8/10.2
R558	7030005060	S.RES	ERJ2GEJ 333 X (33 k)	B	74/13.5
R559	7030005090	S.RES	ERJ2GEJ 104 X (100 k)	B	11/20.8
R560	7030005090	S.RES	ERJ2GEJ 104 X (100 k)	T	6.2/20.8
C501	4030016930	S.CER	ECJ0EB1A104K	B	41.8/30.2
C502	4030016930	S.CER	ECJ0EB1A104K	B	40.9/30.2

[FRONT UNIT]

REF NO.	ORDER NO.	DESCRIPTION		M.	H/V LOCATION
C503	4030016930	S.CER	ECJ0EB1A104K	B	42.7/30.2
C504	4030016930	S.CER	ECJ0EB1A104K	B	43.6/30.2
C505	4030016930	S.CER	ECJ0EB1A104K	B	44.5/30.2
C506	4030017490	S.CER	C1608 JB 1A 105K-T	B	44.7/23.2
C507	4030017460	S.CER	ECJ0EB1E102K	B	46.1/22.7
C508	4030017490	S.CER	C1608 JB 1A 105K-T	B	43.4/23.2
C509	4030017730	S.CER	ECJ0EB1E471K	B	13.1/33.3
C510	4030017730	S.CER	ECJ0EB1E471K	B	18.6/30.5
C511	4030016790	S.CER	ECJ0EB1C103K	B	58.3/17.1
C512	4030016930	S.CER	ECJ0EB1A104K	B	62/17.1
C513	4030017030	S.CER	ECJ0EB1A273K	B	59.1/10.2
C514	4030016930	S.CER	ECJ0EB1A104K	B	58.3/18.3
C515	4030017630	S.CER	ECJ0EC1H120J	B	57.1/17.8
C516	4030017580	S.CER	ECJ0EC1H060C	B	48.9/22.7
C517	4030016790	S.CER	ECJ0EB1C103K	B	52.9/22.7
C518	4030017640	S.CER	ECJ0EC1H150J	B	49.8/22.7
C519	4030016930	S.CER	ECJ0EB1A104K	B	53.8/22.7
C520	4030017420	S.CER	ECJ0EC1H470J	T	12.5/36.3
C521	4030017460	S.CER	ECJ0EB1E102K	B	78.8/27.5
C522	4550006480	S.TAN	TEESVA 1C 475M8R	B	87.7/9.8
C523	4550006250	S.TAN	TEESVA 1A 106M8R	B	12.8/7.6
C524	4550006250	S.TAN	TEESVA 1A 106M8R	B	7.2/7.6
C525	4030017330	S.CER	ECJ0EF1C104Z	B	85.7/7.7
C526	4030016790	S.CER	ECJ0EB1C103K	B	84.1/7.7
C527	4030017420	S.CER	ECJ0EC1H470J	T	5.9/17.2
C528	4030017460	S.CER	ECJ0EB1E102K	T	8.4/17.2
C529	4550006250	S.TAN	TEESVA 1A 106M8R	B	82.1/9.8
C530	4030016930	S.CER	ECJ0EB1A104K	B	84.1/12.1
C531	4030017460	S.CER	ECJ0EB1E102K	B	79/22.5
C533	4030017460	S.CER	ECJ0EB1E102K	B	80/22.5
C534	4030017420	S.CER	ECJ0EC1H470J	B	76.2/22.9
C535	4030016930	S.CER	ECJ0EB1A104K	B	5.4/9.1
C536	4030016930	S.CER	ECJ0EB1A104K	B	3.3/18.2
C537	4030017460	S.CER	ECJ0EB1E102K	B	14/25
C538	4030017330	S.CER	ECJ0EF1C104Z	B	6/10.9
C539	4030017420	S.CER	ECJ0EC1H470J	T	10.9/17.2
C540	4030017460	S.CER	ECJ0EB1E102K	B	10.9/17.8
C541	4030017420	S.CER	ECJ0EC1H470J	B	8.5/10.9
C543	4030017420	S.CER	ECJ0EC1H470J	B	77.6/16.7
C544	4030017420	S.CER	ECJ0EC1H470J	B	79.8/16.7
C545	4030017420	S.CER	ECJ0EC1H470J	B	77.6/15.8
C546	4030017420	S.CER	ECJ0EC1H470J	B	74/15.3
C547	4030017460	S.CER	ECJ0EB1E102K	B	74/16.2
C548	4030017490	S.CER	C1608 JB 1A 105K-T	B	9.7/19.3
C549	4030016930	S.CER	ECJ0EB1A104K	B	3.7/21.2
C550	4030018900	S.CER	ECJ0EB0J474K	B	70.1/11.9
C551	4030016930	S.CER	ECJ0EB1A104K	B	70.9/10.2
C552	4030017460	S.CER	ECJ0EB1E102K	B	75.2/6.9
C553	4030017460	S.CER	ECJ0EB1E102K	B	71.4/13.3
C554	4030016790	S.CER	ECJ0EB1C103K	B	74.2/8.7
C555	4030017460	S.CER	ECJ0EB1E102K	B	74/14.4
C556	4550006480	S.TAN	TEESVA 1C 475M8R	B	76.9/10.2
J501	6510022021	S.CNR	14FLT-SM2-TB (LF) (SN)	B	88/28.5
J502	6510023091	S.CNR	20FLT-SM2-TB (LF) (SN)	B	75.5/19.5
J503	6450002210	CNR	3017-8821 <KIN>		
DS501	5030003020	LCD	L6-0226TVM-3		
DS502	5040002670	S.LED	CL-165HR/YG	T	18.2/35.9
DS503	5040002310	S.LED	SML-311YTT86	T	32.8/6.5
DS504	5040002310	S.LED	SML-311YTT86	T	46.1/6.3
DS505	5040002310	S.LED	SML-311YTT86	T	59.8/6.3
DS506	5040002310	S.LED	SML-311YTT86	T	92.3/24.5
DS507	5040002310	S.LED	SML-311YTT86	T	73.1/6.5
DS508	5040002310	S.LED	SML-311YTT86	T	31.7/26
DS509	5040002310	S.LED	SML-311YTT86	T	40.2/26
DS510	5040002310	S.LED	SML-311YTT86	T	48.7/26
DS511	5040002310	S.LED	SML-311YTT86	T	74.2/26
DS512	5040002310	S.LED	SML-311YTT86	T	65.7/26
DS513	5040002310	S.LED	SML-311YTT86	T	57.2/26
SP501	2510001400	SP			
W501	8900012711	CBL	OPC-1297A (P0.5,N20,L62) <TJM>		
W502	7120000470	JMP	ERDS2T0		
W503	7120000470	JMP	ERDS2T0		
EP502	8930072220	LCT	SRCN-2979-SP-N-W		

M.=Mounted side (T: Mounted on the Top side, B: Mounted on the Bottom side)
S.=Surface mount

[MAIN UNIT] (Other than "MDC compatible")

REF NO.	ORDER NO.	DESCRIPTION	M.	H/V LOCATION
IC1	1110005340	S.IC NJM12902V-TE1-#ZZZB	T	82.3/12.9
IC2	1110006221	S.IC AK2346P-E2/P	B	44.7/11.7
IC3	1140013200	S.IC CD4053BPWR	B	58.7/9.3
IC4	1130010100	S.IC LMX2352TMX/NOPB	T	82.9/46
IC5	1110003491	S.IC TA31136FNG (D,EL)	T	28/13.9
IC6	1190001350	S.IC M62364FP 600D	B	84.9/12.9
IC7	1110005340	S.IC NJM12902V-TE1-#ZZZB	T	108.5/43.7
IC8	1140013200	S.IC CD4053BPWR	B	58.7/16.1
IC9	1130012960	S.IC BU8872FS-E2	B	133.1/21.3
IC10	1190002051	S.IC SPM5001-TL-E	B	33.8/36.9
IC12	1190001340	S.IC M62334FP 600C	B	9.1/25.7
IC13	1110005771	S.IC S-80942CNMC-G9CT2G	B	126/44.8
IC14	1140014550	S.IC HD64F2506FC26DV	B	111.8/35.7
IC15	1150002042	IC RA30H1317M-121 [EXP-01], [EUR-01]		
	1150002073	IC RA60H1317M-125 [USA-01]		
IC16	1140012950	S.IC 24LC512T-I/SM	B	133.3/29
IC17	1110002751	S.IC TA75S01F (TE85R,F)	T	54.1/70.4
IC18	1180000970	S.IC AN78L05M-(E1)	B	113/65.3
IC19	1120002510	S.IC DS14C232TM S	T	104.7/70.5
IC20	1180001251	S.IC TA7808F (TE16L,Q)	B	121.5/65.8
IC21	1110003091	IC LA4425A-E		
IC22	1110002751	S.IC TA75S01F (TE85R,F)	B	135.5/54.4
IC23	1130006221	S.IC TC4W53FU (TE12L,F)	B	106.9/9.6
Q1	1590003230	S.TR UNR9113J-(TX)	B	15.2/6
Q3	1530002851	S.TR 2SC4116-BL (TE85R,F)	B	36.4/15.5
Q4	1590001650	S.TR XP4601 (TX)	B	92.8/12.4
Q5	1590003290	S.TR UNR9213J-(TX)	B	76.7/50
Q6	1530002851	S.TR 2SC4116-BL (TE85R,F)	T	63.2/55.1
Q7	1560000541	S.FET 2SK880-Y (T5RICOM,F)	B	81.2/27.1
Q8	1530002851	S.TR 2SC4116-BL (TE85R,F)	B	79.2/31.8
Q9	1530002851	S.TR 2SC4116-BL (TE85R,F)	B	81.7/31.8
Q10	1560001360	S.FET 2SK3019 TL	B	57/31.6
Q12	1530002601	S.TR 2SC4215-O (TE85R,F)	T	26.9/20
Q13	1530002851	S.TR 2SC4116-BL (TE85R,F)	B	31.8/9.9
Q16	1590003290	S.TR UNR9213J-(TX)	T	113.2/47.6
Q17	1530002920	S.TR 2SC4226-T1 R25	T	50.9/47.6
Q18	1530002920	S.TR 2SC4226-T1 R25	T	61.6/42.6
Q19	1530002920	S.TR 2SC4226-T1 R25	T	72.1/43
Q20	1590003230	S.TR UNR9113J-(TX)	B	33.9/25.2
Q22	1530003311	S.TR 2SC5107-O (TE85R,F)	T	58.1/46.3
Q23	1590001400	S.TR XP1214 (TX)	B	55.7/40.9
Q24	1590003280	S.TR UNR9213J-(TX)	B	55.8/38.2
Q25	1530003311	S.TR 2SC5107-O (TE85R,F)	B	65.9/49.5
Q26	1590001400	S.TR XP1214 (TX)	B	67.2/43.1
Q27	1590003230	S.TR UNR9113J-(TX)	T	124.7/52
Q28	1590003290	S.TR UNR9213J-(TX)	B	123.4/46.3
Q29	1530003311	S.TR 2SC5107-O (TE85R,F)	B	53.5/51.2
Q30	1530000372	S.TR 2SC3356-T1B R (R24)	B	65.5/66
Q31	1580000731	S.FET 3SK293 (TE85L,F)	B	10.2/38.6
Q32	1560000841	S.FET 2SK1829 (TE85R,F)	T	11/42.5
Q33	1530002851	S.TR 2SC4116-BL (TE85R,F) [USA-01] only	T	47.5/69.4
Q34	1590003290	S.TR UNR9213J-(TX)	T	83/67.4
Q35	1520000460	S.TR 2SB1132 T100 R	T	100.1/57.9
Q36	1590001190	S.TR XP6501-(TX) .AB	T	104.3/55.8
Q37	1540000550	S.TR 2SD1664 T100Q	T	75.5/63.6
Q38	1510000920	S.TR 2SA1577 T106 Q	T	39.3/21.3
Q39	1590003290	S.TR UNR9213J-(TX)	T	42.6/21.3
Q40	1590003290	S.TR UNR9213J-(TX)	T	104.1/51.9
Q41	1590001451	S.FET 2SJ144-GR (TE85R,F)	B	110.3/83.3
Q42	1590003290	S.TR UNR9213J-(TX)	B	132.1/45
Q43	1590000990	S.TR DTC363EK T146	B	135.7/49
Q44	1590003290	S.TR UNR9213J-(TX)	T	108.5/21.6
Q45	1590003290	S.TR UNR9213J-(TX)	B	133.3/58.9
Q46	1590003290	S.TR UNR9213J-(TX)	T	117.9/84.4
Q47	1550000100	S.FET 2SJ377 (TE16L1,NQ)	B	131.3/71.5
Q48	1590003290	S.TR UNR9213J-(TX)	B	124.9/77.7
Q49	1530002851	S.TR 2SC4116-BL (TE85R,F)	B	139.3/37.2
Q50	1530002601	S.TR 2SC4215-O (TE85R,F)	T	40.6/39.2
Q51	1590003321	S.FET TPC6103 (TE85L,F)	B	133.6/63.4
Q52	1590003290	S.TR UNR9213J-(TX)	B	128.2/61.1
Q53	1590000430	S.TR DTC144EUA T106	B	52.3/67.4
Q54	1590000430	S.TR DTC144EUA T106	T	25.5/6.3
Q55	1560001360	S.FET 2SK3019 TL	T	75.5/20.9
Q57	1590003290	S.TR UNR9213J-(TX)	T	112/14.4
D1	1750001070	S.DIO DAN235ETL	T	10.4/15.7
D2	1750001070	S.DIO DAN235ETL	T	22.6/8.9
D3	1790001250	S.DIO MA2S111-(TX)	T	61.3/55
D4	1790001260	S.DIO MA2S077-(TX)	B	72.9/49.8
D5	1790001260	S.DIO MA2S077-(TX)	B	71.1/51.3
D6	1750001070	S.DIO DAN235ETL	T	30.6/20.8
D7	1160000140	S.DIO DAP222 TL	T	58.9/14
D8	1720000791	S.VCP HVC321B1TRF-E	T	49.5/32.4
D9	1720000791	S.VCP HVC321B1TRF-E	T	52.7/32.4
D10	1720000791	S.VCP HVC321B1TRF-E	T	60.5/30
D11	1720000641	S.VCP 1SV284 (TPH3,F)	T	52.7/33.6
D12	1720000641	S.VCP 1SV284 (TPH3,F)	T	52.7/34.8
D13	1720000791	S.VCP HVC321B1TRF-E	T	63.8/28.6
D14	1720000791	S.VCP HVC321B1TRF-E	T	73.6/30.4
D15	1720000641	S.VCP 1SV284 (TPH3,F)	T	63.8/31.3
D17	1720000791	S.VCP HVC321B1TRF-E	T	72.1/27.9
D18	1750000721	S.VCP HVC375BTRF-E	T	69.8/33.3
D19	1160000140	S.DIO DAP222 TL	B	120.5/17.8
D20	1720000471	S.VCP 1SV239 (TPH3,F)	T	69.4/34.9
D21	1750001070	S.DIO DAN235ETL	T	36.3/38.3
D22	1750000520	S.DIO DAN222TL	T	124.7/54.5
D23	1790001260	S.DIO MA2S077-(TX)	T	125.6/39.2
D24	1790001260	S.DIO MA2S077-(TX)	B	50.7/53.2
D25	1790001260	S.DIO MA2S077-(TX)	B	49.3/50.8

[MAIN UNIT] (Other than "MDC compatible")

REF NO.	ORDER NO.	DESCRIPTION	M.	H/V LOCATION
D26	1750000711	S.VCP HVC350BTRF-E	B	17.7/36
D27	1750000711	S.VCP HVC350BTRF-E	B	16.2/36
D28	1750000370	S.DIO DA221 TL	T	10/37.5
D29	1790001250	S.DIO MA2S111-(TX)	T	12/39.5
D30	1750000721	S.VCP HVC375BTRF-E	B	8.6/44.7
D31	1790001250	S.DIO MA2S111-(TX)	T	8.5/43.7
D32	1750001080	S.DIO RB886G T2R	T	64.1/76.5
D33	1750001080	S.DIO RB886G T2R	T	65.8/75.8
D34	1750000721	S.VCP HVC375BTRF-E	B	8.6/47.4
D35	1790001260	S.DIO MA2S077-(TX)	B	17.9/48.1
D36	1790001240	S.DIO MA2S728-(TX)	B	16.5/48.1
D37	1750000370	S.DIO DA221 TL	T	75.5/67.6
D38	1750000511	S.DIO UX9401F-STD/TR [EXP-01], [EUR-01] only	T	30/66
D39	1710001061	DIO L407CDB [USA-01] only		
D42	1750001360	S.DIO L709CER (9401)	T	34.6/58.7
D45	1750000520	S.DIO DAN222TL	T	91.8/57.5
D46	1750000520	S.DIO DAN222TL	T	89.6/57.5
D47	1790001211	S.DIO 1SS375-TL-E	B	29.2/63.8
D48	1750000520	S.DIO DAN222TL	B	93/61.5
D49	1790001211	S.DIO 1SS375-TL-E	B	6/52.8
D50	1750000370	S.DIO DA221 TL	B	97.2/65.8
D51	1790001211	S.DIO 1SS375-TL-E	B	3.9/79.7
D52	1750000520	S.DIO DAN222TL	B	132.5/41
D53	1790001250	S.DIO MA2S111-(TX)	B	133.3/47.3
D55	1750000370	S.DIO DA221 TL	B	108.8/57.4
D56	1750000370	S.DIO DA221 TL	T	108.8/60.6
D57	1750000370	S.DIO DA221 TL	B	95.1/65.8
D58	1750000520	S.DIO DAN222TL	T	94/57.5
D59	1750000520	S.DIO DAN222TL	B	104/80.4
D62	1790000700	DIO DSA3A1		
D63	1750000520	S.DIO DAN222TL	B	110.3/80.9
D65	1750000520	S.DIO DAN222TL	B	129.7/58.9
D66	1790001621	S.DIO 1SV308 (TPL3,F)	T	33.9/38.8
D67	1790001621	S.DIO 1SV308 (TPL3,F)	T	33.9/37.5
D68	1790001621	S.DIO 1SV308 (TPL3,F)	T	29.9/23.2
D69	1790001621	S.DIO 1SV308 (TPL3,F)	T	31.2/23.2
D70	1750000351	S.DIO 1SV252 (TE85L,F)	T	73.6/75.5
D71	1730002410	S.ZEN MA8200-H (TX)	T	118.3/86.3
D72	1750000520	S.DIO DAN222TL	T	87.4/57.5
D73	1750000520	S.DIO DAN222TL	B	93/64.5
FI1	2020001410	CER CFWLB450KGFA-B0		
FI2	2020002470	S.CER CFWKA450KHFA-R0	T	15.4/9.3
FI3	2030000500	S.MLH FL-401 (46.35 MHz)	T	24.7/28.4
FI4	2030000150	S.MLH FL-335 (46.350 MHz)	T	35.6/28.4
FI5	2040001440	S.LC NFE31PT152Z1E9L	B	94.5/77
FI6	2040001440	S.LC NFE31PT152Z1E9L	B	94.5/73.7
FI7	2040001440	S.LC NFE31PT152Z1E9L [USA-01] only	B	94.5/70.3
X1	6050012380	S.XTL CR-826 (15.3 MHz)	T	84.2/34.7
X2	6050011730	S.XTL CR-765 (3.6864 MHz)	T	48.3/11.6
X3	6070000300	S.DCR JTBM450CX24 <JJE>	T	37.1/10.3
X4	6050012320	S.XTL CR-818 (4.194304 MHz)	T	139.1/21.9
X5	6050011720	S.XTL CR-764 (19.6608 MHz)	T	120.5/44.3
L1	6200004660	S.COL MLF1608A 1R8K-T	T	82.7/54.3
L2	6200003540	S.COL MLF1608D R22K-T	B	34.4/14.7
L3	6200004480	S.COL MLF1608D R82K-T	B	29.7/16.2
L4	6200007911	S.COL ELJRF 18NJFB	B	75.9/48.3
L5	6200007120	S.COL MLF1608A 3R3K-T	T	49.4/30.8
L6	6200007120	S.COL MLF1608A 3R3K-T	T	52.7/30.8
L7	6200007120	S.COL MLF1608A 3R3K-T	T	60.5/28.4
L8	6200007170	S.COL MLF1608A 3R3K-T	T	74/27.5
L9	6200007170	S.COL MLF1608A 3R3K-T	T	69.8/32
L10	6200010600	S.COL C6342A-67NG-A	T	51.2/39.2
L11	6200003640	S.COL MLF1608E 100K-T	T	48.3/33.6
L12	6200009910	S.COL C6342A-88NG-A	T	61.6/35.5
L13	6200007120	S.COL MLF1608A 3R3K-T	T	63.8/27
L14	6200003640	S.COL MLF1608E 100K-T	T	60/31.4
L15	6200012450	S.COL 0.25-1.9-8TL 73N (COAT)	T	73.3/35.9
L16	6200008090	S.COL LQW2BHN68NJ03L	T	69.5/28
L17	6200003640	S.COL MLF1608E 100K-T	T	73.7/32.6
L18	6130003000	S.COL #617DB-1714=P3	B	39/36.2
L19	6130003000	S.COL #617DB-1714=P3	B	34.5/42.6
L20	6200009181	S.COL ELJRE R10JFA	T	57.3/48.3
L21	6200007911	S.COL ELJRF 18NJFB	B	66.3/51.2
L22	6200005721	S.COL ELJRE 33NGFA	B	40.6/48.1
L23	6200005721	S.COL ELJRE 33NGFA	B	45.5/48.1
L24	6130003000	S.COL #617DB-1714=P3	B	27/36.2
L25	6200009151	S.COL ELJRE 82NJFA	B	54.2/53.4
L26	6200010720	S.COL LQW2BHN56NJ03L	B	20.9/37
L27	6200009181	S.COL ELJRE R10JFA	B	66.5/69.4
L28	6200010720	S.COL LQW2BHN56NJ03L	B	11.7/35.1
L29	6200009171	S.COL ELJRE 47NJFA	B	70.5/70.8
L30	6200009171	S.COL ELJRE 47NJFA	T	72.6/72.7
L31	6200010730	S.COL LQW2BHN68NJ03L	B	7.8/41.5
L32	6200010730	S.COL LQW2BHN68NJ03L	B	9.9/50.6
L33	6200010050	S.COL AS080547-47N	T	33.3/73.9
L34	6200007750	S.COL LQW2BHN56NJ03L	B	13.2/51.7
L35	6200006991	S.COL ELJRE 56NGFA	B	20.1/50.7
L36	6200010420	S.COL FHW1210HC 1R0JGT <JJE>	B	39.2/66
L37	6200010050	S.COL AS080547-47N	T	30/58.5
L38	6200010050	S.COL AS080547-47N	T	21.6/58
L39	6200010050	S.COL AS080547-47N	T	12.5/57.5
L40	6200010050	S.COL AS080547-47N	T	10.5/81
L41	6200002861	S.COL NLV25T-4R7J	T	122.3/54.4
L42	6200005011	S.COL NLV25T-100J	T	40.7/42.1
L43	6200010680	S.COL C2520C-R22G-A (0.22U)	T	42.1/34.9
L44	6200010740	S.COL C2520C-R27G-A	T	37.8/35.3
L45	6200003960	S.COL MLF1608A 1R0K-T	T	71.3/72.7

M.=Mounted side (T: Mounted on the Top side, B: Mounted on the Bottom side)
S.=Surface mount

[MAIN UNIT] (Other than "MDC compatible")

REF NO.	ORDER NO.	DESCRIPTION	M.	H/V LOCATION
L46	6200005661	S.COL ELJRE 10NGFA	T	78.3/42.3
R1	7030005060	S.RES ERJ2GEJ 333 X (33 k)	B	38.1/5.8
R2	7510001730	S.TMR ERTJOEP 473J	T	90.4/35.6
R3	7030005050	S.RES ERJ2GEJ 103 X (10 k)	T	79/11.9
R4	7030005700	S.RES ERJ2GEJ 274 X (270 k)	B	88.5/18.9
R5	7030005090	S.RES ERJ2GEJ 104 X (100 k)	T	90.4/34
R6	7030005160	S.RES ERJ2GEJ 105 X (1 M)	T	84/19.4
R7	7030005230	S.RES ERJ2GEJ 334 X (330 k)	T	84/17.5
R8	7410001130	S.ARY EXB28V102JX	T	86.1/52.4
R9	7030007570	S.RES ERJ2GEJ 122 X (1.2 k)	B	34.3/11.6
R10	7030007060	S.RES ERJ2GEJ 684X (680 k)	B	35.8/13.7
R11	7030010040	S.RES ERJ2GEJ-JPW	T	8.5/9.2
R12	7030004970	S.RES ERJ2GEJ 470 X (47)	T	31/17.2
R13	7030005600	S.RES ERJ2GEJ 273 X (27 k)	T	8.8/15.9
R14	7030005210	S.RES ERJ2GEJ 822 X (8.2 k)	T	7.5/7.4
R15	7030005070	S.RES ERJ2GEJ 683 X (68 k)	B	93.3/14.4
R17	7030007570	S.RES ERJ2GEJ 122 X (1.2 k)	B	93.3/15.3
R18	7030008300	S.RES ERJ2GEJ 184 X (180 k)	B	79/11.8
R19	7030005230	S.RES ERJ2GEJ 334 X (330 k)	T	89.3/9
R20	7030005090	S.RES ERJ2GEJ 104 X (100 k)	T	85.6/8.3
R21	7030005070	S.RES ERJ2GEJ 683 X (68 k)	T	86.6/8.3
R22	7030005050	S.RES ERJ2GEJ 103 X (10 k)	B	38.1/7.5
R23	7030005050	S.RES ERJ2GEJ 103 X (10 k)	B	38.1/9.2
R24	7030005060	S.RES ERJ2GEJ 333 X (33 k)	B	37.2/10.5
R25	7030005120	S.RES ERJ2GEJ 102 X (1 k)	B	100.9/51.4
R26	7030005000	S.RES ERJ2GEJ 471 X (470)	B	87.5/5.3
R27	7030007300	S.RES ERJ2GEJ 332 X (3.3 k)	T	53.9/5.6
R28	7030010040	S.RES ERJ2GEJ-JPW	T	59.4/5.6
R29	7030005000	S.RES ERJ2GEJ 471 X (470)	T	116.4/14.5
R30	7030005170	S.RES ERJ2GEJ 474 X (470 k)	B	37.2/9.2
R31	7030007340	S.RES ERJ2GEJ 153 X (15 k)	B	36.3/9.2
R32	7030005720	S.RES ERJ2GEJ 563 X (56 k)	B	37.2/7.5
R33	7030005160	S.RES ERJ2GEJ 105 X (1 M)	T	80.7/8.4
R34	7030005040	S.RES ERJ2GEJ 472 X (4.7 k)	T	80.7/7.2
R35	7030005120	S.RES ERJ2GEJ 102 X (1 k)	T	77.6/9.5
R36	7030005030	S.RES ERJ2GEJ 152 X (1.5 k)	B	27/14.7
R37	7030007300	S.RES ERJ2GEJ 332 X (3.3 k)	B	15.2/8.6
R38	7030005210	S.RES ERJ2GEJ 822 X (8.2 k)	T	22.9/6.2
R39	7030005600	S.RES ERJ2GEJ 273 X (27 k)	T	24/9.1
R40	7030005170	S.RES ERJ2GEJ 474 X (470 k)	T	25.9/10.6
R41	7030007290	S.RES ERJ2GEJ 222 X (2.2 k)	T	27.6/6.2
R42	7030005090	S.RES ERJ2GEJ 104 X (100 k)	B	94.8/11.7
R43	7030007300	S.RES ERJ2GEJ 332 X (3.3 k)	B	94.8/10
R44	7030007340	S.RES ERJ2GEJ 153 X (15 k)	B	90.7/11.9
R45	7030005220	S.RES ERJ2GEJ 223 X (22 k)	B	92.8/10
R46	7030005040	S.RES ERJ2GEJ 472 X (4.7 k)	T	92.1/14.1
R47	7030005050	S.RES ERJ2GEJ 103 X (10 k)	T	92.1/13.1
R48	7030005060	S.RES ERJ2GEJ 333 X (33 k)	B	50.9/8.6
R49	7030005160	S.RES ERJ2GEJ 105 X (1 M)	B	49.7/13.7
R50	7030005090	S.RES ERJ2GEJ 104 X (100 k)	B	49.7/11
R51	7030005210	S.RES ERJ2GEJ 822 X (8.2 k)	T	52.4/7
R52	7030007340	S.RES ERJ2GEJ 153 X (15 k)	T	59.1/12.5
R53	7030005000	S.RES ERJ2GEJ 471 X (470)	T	86.2/37.7
R54	7030010040	S.RES ERJ2GEJ-JPW	B	78.7/36.4
R55	7030005290	S.RES ERJ2GEJ 682 X (6.8 k)	T	81.8/25.3
R56	7030005040	S.RES ERJ2GEJ 472 X (4.7 k)	B	77.7/48.4
R57	7030005090	S.RES ERJ2GEJ 104 X (100 k)	B	28.3/14.3
R58	7030005050	S.RES ERJ2GEJ 103 X (10 k)	T	27.6/9
R59	7030005170	S.RES ERJ2GEJ 474 X (470 k)	T	27.6/8.1
R60	7030005000	S.RES ERJ2GEJ 471 X (470)	T	30.9/10.2
R61	7030005040	S.RES ERJ2GEJ 472 X (4.7 k)	T	28.8/8.5
R62	7030005040	S.RES ERJ2GEJ 472 X (4.7 k)	B	32.2/11.9
R63	7030005220	S.RES ERJ2GEJ 223 X (22 k)	B	92.8/8.3
R64	7030005220	S.RES ERJ2GEJ 223 X (22 k)	B	92.8/6.5
R65	7030005090	S.RES ERJ2GEJ 104 X (100 k)	B	50.9/9.5
R66	7030005050	S.RES ERJ2GEJ 103 X (10 k)	T	86.6/11.8
R67	7030005210	S.RES ERJ2GEJ 822 X (8.2 k)	T	53.4/7
R68	7030007290	S.RES ERJ2GEJ 222 X (2.2 k)	B	53.7/17.9
R69	7030010040	S.RES ERJ2GEJ-JPW	T	85.6/13.6
R71	7030005090	S.RES ERJ2GEJ 104 X (100 k)	T	57.7/6.3
R72	7030007290	S.RES ERJ2GEJ 222 X (2.2 k)	T	64.9/55.6
R73	7030005000	S.RES ERJ2GEJ 471 X (470)	B	83.2/26.9
R74	7030007300	S.RES ERJ2GEJ 332 X (3.3 k)	B	81.8/25.3
R75	7030009140	S.RES ERJ2GEJ 272 X (2.7 k)	B	79.2/34
R76	7030007340	S.RES ERJ2GEJ 153 X (15 k)	B	80.3/29.1
R77	7030005580	S.RES ERJ2GEJ 560 X (56)	T	78.2/47.2
R78	7030005070	S.RES ERJ2GEJ 683 X (68 k)	B	81.5/34
R79	7030005040	S.RES ERJ2GEJ 472 X (4.7 k)	B	74.8/50
R80	7030005040	S.RES ERJ2GEJ 472 X (4.7 k)	B	70/50.9
R81	7030005110	S.RES ERJ2GEJ 224 X (220 k)	B	55.5/31.4
R82	7030005110	S.RES ERJ2GEJ 224 X (220 k)	B	66.3/33.3
R83	7030008400	S.RES ERJ2GEJ 182 X (1.8 k)	T	32.6/10.2
R84	7030007280	S.RES ERJ2GEJ 331 X (330)	T	24.6/20.3
R85	7030005110	S.RES ERJ2GEJ 224 X (220 k)	T	24.6/21.2
R86	7030007300	S.RES ERJ2GEJ 332 X (3.3 k)	B	30/10.5
R87	7030007300	S.RES ERJ2GEJ 332 X (3.3 k)	T	32.2/20.6
R88	7030005120	S.RES ERJ2GEJ 102 X (1 k)	B	91.7/6.5
R90	7030005000	S.RES ERJ2GEJ 471 X (470)	B	89.4/18.9
R91	7030005700	S.RES ERJ2GEJ 274 X (270 k)	T	85.6/11.8
R92	7030005090	S.RES ERJ2GEJ 104 X (100 k)	T	87.3/13.4
R93	7030005310	S.RES ERJ2GEJ 124 X (120 k)	T	83.9/8.2
R94	7030005080	S.RES ERJ2GEJ 823 X (82 k)	T	108/34.7
R95	7030005720	S.RES ERJ2GEJ 563 X (56 k)	T	108/33.8
R96	7030005240	S.RES ERJ2GEJ 473 X (47 k)	B	63.7/15.5
R97	7030005060	S.RES ERJ2GEJ 333 X (33 k)	B	53.3/16.6
R98	7030005040	S.RES ERJ2GEJ 472 X (4.7 k)	B	62.1/19.4
R99	7030005240	S.RES ERJ2GEJ 473 X (47 k)	B	60.2/19.4
R100	7030005030	S.RES ERJ2GEJ 152 X (1.5 k)	B	77.9/34.4
R101	7030008280	S.RES ERJ2GEJ 271 X (270)	B	79.2/29.1
R102	7030005530	S.RES ERJ2GEJ 100 X (10)	T	23/20.3
R103	7030005600	S.RES ERJ2GEJ 273 X (27 k)	B	29.9/23.8
R104	7030007280	S.RES ERJ2GEJ 331 X (330)	T	26.9/22.6

[MAIN UNIT] (Other than "MDC compatible")

REF NO.	ORDER NO.	DESCRIPTION	M.	H/V LOCATION
R105	7030005600	S.RES ERJ2GEJ 273 X (27 k)	B	30.9/23.8
R106	7030007270	S.RES ERJ2GEJ 151 X (150)	T	34.3/22.5
R107	7030007340	S.RES ERJ2GEJ 153 X (15 k)	B	129.7/52.3
R108	7030005240	S.RES ERJ2GEJ 473 X (47 k)	B	82.3/18.9
R109	7030005700	S.RES ERJ2GEJ 274 X (270 k)	B	81.3/18.9
R110	7030005050	S.RES ERJ2GEJ 103 X (10 k)	T	78.4/20.2
R111	7030005050	S.RES ERJ2GEJ 103 X (10 k)	T	95.9/28.3
R112	7030005700	S.RES ERJ2GEJ 274 X (270 k)	T	80.8/20.1
R113	7030005240	S.RES ERJ2GEJ 473 X (47 k)	B	57.9/19.4
R114	7030005090	S.RES ERJ2GEJ 104 X (100 k)	B	53.7/13.3
R115	7030005090	S.RES ERJ2GEJ 104 X (100 k)	T	114.4/18.4
R116	7030005090	S.RES ERJ2GEJ 104 X (100 k)	B	85.3/7.3
R118	7030006610	S.RES ERJ2GEJ 394 X (390 k)	T	89.5/11.7
R120	7030009280	S.RES ERJ2GEJ 391 X	T	30.3/34.3
R122	7030005600	S.RES ERJ2GEJ 273 X (27 k)	T	32.3/35.2
R123	7030005600	S.RES ERJ2GEJ 273 X (27 k)	T	33.5/35.2
R125	7030004970	S.RES ERJ2GEJ 470 X (47)	T	35/34
R127	7030005050	S.RES ERJ2GEJ 103 X (10 k)	B	79.1/18.3
R128	7030008290	S.RES ERJ2GEJ 183 X (18 k)	T	112.1/45.1
R129	7030005040	S.RES ERJ2GEJ 472 X (4.7 k)	T	112.1/44.1
R130	7030005070	S.RES ERJ2GEJ 683 X (68 k)	T	104.9/43.2
R131	7030005070	S.RES ERJ2GEJ 683 X (68 k)	T	104.9/44.1
R132	7030004980	S.RES ERJ2GEJ 101 X (100)	T	114.4/17.5
R134	7030005160	S.RES ERJ2GEJ 105 X (1 M)	T	128.9/26.3
R135	7030005160	S.RES ERJ2GEJ 105 X (1 M)	T	128.9/25.3
R136	7030005160	S.RES ERJ2GEJ 105 X (1 M)	T	128.9/24.2
R139	7410001140	S.ARY EXB28V104JX	T	130.6/20.6
R140	7030011000	S.RES RR0510P-392-D (3.9 k)	T	48.1/47.2
R141	7030008340	S.RES RR0510P-182-D (1.8 k)	T	50.8/45.4
R142	7030010040	S.RES ERJ2GEJ-JPW	T	49/47.2
R143	7030011000	S.RES RR0510P-392-D (3.9 k)	T	58.7/42.2
R144	7030008340	S.RES RR0510P-182-D (1.8 k)	T	61.7/40.4
R145	7030010040	S.RES ERJ2GEJ-JPW	T	59.6/42.2
R146	7030011000	S.RES RR0510P-392-D (3.9 k)	T	71.8/45.8
R147	7030008340	S.RES RR0510P-182-D (1.8 k)	T	70/41.9
R148	7030010040	S.RES ERJ2GEJ-JPW	T	71.8/44.9
R149	7030005310	S.RES ERJ2GEJ 124 X (120 k)	T	69.1/36.3
R150	7030005240	S.RES ERJ2GEJ 473 X (47 k)	T	89.8/15.5
R151	7030005060	S.RES ERJ2GEJ 333 X (33 k)	T	91/16.1
R152	7030005090	S.RES ERJ2GEJ 104 X (100 k)	T	88.9/16.4
R153	7030007300	S.RES ERJ2GEJ 332 X (3.3 k)	T	39.9/32.2
R154	7030009530	S.RES ERJ2GEJ 470 X (47)	T	42.9/40.1
R155	7030005120	S.RES ERJ2GEJ 102 X (1 k)	T	41.7/32.4
R156	7030004970	S.RES ERJ2GEJ 470 X (47)	T	42.5/41.3
R157	7030005090	S.RES ERJ2GEJ 104 X (100 k)	B	33.7/23.6
R158	7030005240	S.RES ERJ2GEJ 473 X (47 k)	T	112.1/42.3
R159	7030005240	S.RES ERJ2GEJ 473 X (47 k)	T	112.1/40.5
R160	7030005240	S.RES ERJ2GEJ 473 X (47 k)	T	113.8/38.7
R161	7030005070	S.RES ERJ2GEJ 683 X (68 k)	T	104.9/46.8
R162	7030005240	S.RES ERJ2GEJ 473 X (47 k)	T	128.2/14.4
R163	7030005240	S.RES ERJ2GEJ 473 X (47 k)	T	128.7/16.3
R164	7030005240	S.RES ERJ2GEJ 473 X (47 k)	T	129.4/14.4
R165	7030005230	S.RES ERJ2GEJ 334 X (330 k)	T	128.7/17.8
R166	7030005230	S.RES ERJ2GEJ 334 X (330 k)	T	128.7/18.7
R167	7030005230	S.RES ERJ2GEJ 334 X (330 k)	T	129.8/16.2
R168	7030006581	S.RES ERA3YED 122V (1.2 k)	T	53.6/47.5
R169	7030007230	S.RES ERA3YED 102V (1 k)	T	63.8/42.6
R170	7030010390	S.RES ERA3YED 821V (820)	T	74.1/43.2
R171	7030005090	S.RES ERJ2GEJ 104 X (100 k)	T	56.3/46.7
R172	7030008280	S.RES ERJ2GEJ 271 X (270)	B	36.4/46.4
R173	7030007270	S.RES ERJ2GEJ 151 X (150)	B	39/31.2
R174	7030004980	S.RES ERJ2GEJ 101 X (100)	B	34.6/38.7
R175	7030004980	S.RES ERJ2GEJ 101 X (100)	B	33/38.7
R176	7030005590	S.RES ERJ2GEJ 680 X (68)	B	31.3/37.4
R177	7030005590	S.RES ERJ2GEJ 680 X (68)	B	31.3/34.9
R178	7030005240	S.RES ERJ2GEJ 473 X (47 k)	T	113.8/37.8
R179	7030008300	S.RES ERJ2GEJ 184 X (180 k)	T	117.6/34.6
R180	7030005720	S.RES ERJ2GEJ 563 X (56 k)	T	118.3/35.3
R181	7030005220	S.RES ERJ2GEJ 223 X (22 k)	T	119/36
R182	7030005120	S.RES ERJ2GEJ 102 X (1 k)	T	116.9/33.9
R183	7030005070	S.RES ERJ2GEJ 683 X (68 k)	T	103.1/46.8
R184	7030005220	S.RES ERJ2GEJ 223 X (22 k)	T	113.8/36.9
R185	7030005070	S.RES ERJ2GEJ 683 X (68 k)	B	102.3/45.6
R186	7030005160	S.RES ERJ2GEJ 105 X (1 M)	T	81.8/18.9
R187	7030005060	S.RES ERJ2GEJ 333 X (33 k)	T	80.6/17.5
R188	7030005090	S.RES ERJ2GEJ 104 X (100 k)	T	78.5/14.9
R189	7030005720	S.RES ERJ2GEJ 563 X (56 k)	T	78.5/15.8
R190	7030007350	S.RES ERJ2GEJ 393 X (39 k)	T	80.6/18.4
R191	7030004980	S.RES ERJ2GEJ 101 X (100)	T	60.5/47
R192	7030004980	S.RES ERJ2GEJ 101 X (100)	B	66.3/53.2
R193	7030005050	S.RES ERJ2GEJ 103 X (10 k)	B	66.3/45.2
R194	7030005110	S.RES ERJ2GEJ 224 X (220 k)	B	62.7/50.8
R195	7030009320	S.RES ERJ2GEJ 4R7 X (4.7)	B	55.8/50.3
R196	7030005120	S.RES ERJ2GEJ 102 X (1 k)	B	65.2/42.8
R197	7030005050	S.RES ERJ2GEJ 103 X (10 k)	B	64.7/44.5
R198	7030010090	S.RES ERJ2GEJ 180 X (18)	B	36/47.6
R199	7030008280	S.RES ERJ2GEJ 271 X (270)	B	37.3/47.6
R200	7030005050	S.RES ERJ2GEJ 103 X (10 k)	B	8.4/20.6
R201	7410001130	S.ARY EXB28V102JX	B	117/51.7
R202	7030005090	S.RES ERJ2GEJ 104 X (100 k)	B	122.5/44.8
R203	7030005120	S.RES ERJ2GEJ 102 X (1 k)	B	127.4/47.3
R204	7410000750	S.ARY EXB-V4V 104JV (100 k)	B	129.6/42.7
R205	7030008010	S.RES ERJ2GEJ 123 X (12 k)	T	127.5/40.1
R206	7030005120	S.RES ERJ2GEJ 102 X (1 k)	B	127/39.5
R207	7030005050	S.RES ERJ2GEJ 103 X (10 k)	T	120.9/37.5
R208	7030005050	S.RES ERJ2GEJ 103 X (10 k)	T	121.6/38.2
R209	7410001130	S.ARY EXB28V102JX	B	125.8/40.8
R210	7030008010	S.RES ERJ2GEJ 123 X (12 k)	T	124.2/38.4
R211	7030008010	S.RES ERJ2GEJ 123 X (12 k)	T	125.9/41.1
R212	7030005160	S.RES ERJ2GEJ 105 X (1 M)	T	122.1/41.1
R213	7030005090	S.RES ERJ2GEJ 104 X (100 k)	B	55.3/51.8
R214	7030004980	S.RES ERJ2GEJ 101 X (100)	B	56.4/54
R215	7030005050	S.RES ERJ2GEJ 103 X (10 k)	B	63.5/61.3
R216	7030005590	S.RES ERJ2GEJ 680 X (68)	B	61.9/62.3

M.=Mounted side (T: Mounted on the Top side, B: Mounted on the Bottom side)
S.=Surface mount

[MAIN UNIT] (Other than "MDC compatible")

REF NO.	ORDER NO.	DESCRIPTION	M.	H/V LOCATION
R218	7030010040	S.RES ERJ2GEJ-JPW	B	56.4/51.8
R219	7030005050	S.RES ERJ2GEJ 103 X (10 k)	B	46/49.8
R220	7030005040	S.RES ERJ2GEJ 472 X (4.7 k)	B	49.3/52
R221	7030005050	S.RES ERJ2GEJ 103 X (10 k)	B	44.4/49.8
R222	7030005090	S.RES ERJ2GEJ 104 X (100 k)	B	17.7/33.9
R223	7030005090	S.RES ERJ2GEJ 104 X (100 k)	B	16.2/33.9
R224	7030005050	S.RES ERJ2GEJ 103 X (10 k)	B	15.7/32.7
R225	7030005000	S.RES ERJ2GEJ 471 X (470)	B	8/19.2
R226	7030004980	S.RES ERJ2GEJ 101 X (100)	T	109.7/53.5
R227	7030005090	S.RES ERJ2GEJ 104 X (100 k)	B	107.1/49.3
R228	7410001140	S.ARY EXB28V104JX	T	103.3/49
R230	7030005050	S.RES ERJ2GEJ 103 X (10 k)	B	124.7/42.7
R232	7030005530	S.RES ERJ2GEJ 100 X (10)	T	120.4/41.1
R233	7410000750	S.ARY EXB-V4V 104JV (100 k)	T	130/34.7
R234	7410001130	S.ARY EXB28V102JX	B	129.4/34.4
R236	7030009530	S.RES ERJ2GEJ 270 X (27)	B	63.9/71.5
R237	7030005040	S.RES ERJ2GEJ 472 X (4.7 k)	B	65.3/69.7
R238	7030008010	S.RES ERJ2GEJ 123 X (12 k)	B	61.9/65.1
R240	7030005570	S.RES ERJ2GEJ 820 X (82)	B	62.4/67.4
R241	7030004980	S.RES ERJ2GEJ 101 X (100)	B	58.5/66
R242	7030004970	S.RES ERJ2GEJ 470 X (47)	T	12/33.1
R243	7030009320	S.RES ERJ2GEJ 4R7 X (4.7)	T	10/36
R244	7030005000	S.RES ERJ2GEJ 471 X (470)	B	15.1/36.3
R245	7030005530	S.RES ERJ2GEJ 100 X (10)	B	11.9/39.9
R246	7030005090	S.RES ERJ2GEJ 104 X (100 k)	B	7.5/38.6
R247	7030004990	S.RES ERJ2GEJ 221 X (220)	B	7.7/36.3
R248	7410001130	S.ARY EXB28V102JX	B	103.9/47.9
R249	7410001130	S.ARY EXB28V102JX	B	123.9/27.6
R250	7410001130	S.ARY EXB28V102JX	B	122.1/25.7
R251	7410001140	S.ARY EXB28V104JX	T	124.7/28.7
R252	7410001140	S.ARY EXB28V104JX	T	122.1/25.7
R253	7030005720	S.RES ERJ2GEJ 563 X (56 k)	T	9.5/40.5
R254	7030005050	S.RES ERJ2GEJ 103 X (10 k)	T	7.4/42.2
R255	7030005310	S.RES ERJ2GEJ 124 X (120 k)	B	6.6/38.6
R256	7030006610	S.RES ERJ2GEJ 394 X (390 k)	T	13/41
R257	7030005040	S.RES ERJ2GEJ 472 X (4.7 k)	T	9/42.2
R258	7030005170	S.RES ERJ2GEJ 474 X (470 k)	T	11/44.5
R259	7030005090	S.RES ERJ2GEJ 104 X (100 k)	B	6/45.1
R260	7030005090	S.RES ERJ2GEJ 104 X (100 k)	B	6/47
R261	7410001130	S.ARY EXB28V102JX	B	99.7/43.5
R262	7410001130	S.ARY EXB28V102JX	T	100.2/37.4
R263	7410001130	S.ARY EXB28V102JX	B	97/40.7
R264	7410001140	S.ARY EXB28V104JX	T	103.8/37
R265	7030005050	S.RES ERJ2GEJ 103 X (10 k)	T	103.8/39.2
R266	7410001130	S.ARY EXB28V102JX	B	120.1/23.5
R267	7410001130	S.ARY EXB28V102JX	B	118.3/21.7
R268	7410001130	S.ARY EXB28V102JX	B	116.5/19.9
R269	7030005090	S.RES ERJ2GEJ 104 X (100 k)	T	119.4/20.8
R271	7030004980	S.RES ERJ2GEJ 101 X (100)	T	77.6/78.5
R272	7030007280	S.RES ERJ2GEJ 331 X (330)	T	61/76.5
R273	7030005050	S.RES ERJ2GEJ 103 X (10 k)	T	62.3/76.1
R274	7030004980	S.RES ERJ2GEJ 101 X (100)	T	56.7/69.3
R275	7030005030	S.RES ERJ2GEJ 152 X (1.5 k)	T	64.8/73.8
R276	7030005040	S.RES ERJ2GEJ 472 X (4.7 k) [EXP-01], [EUR-01] only	T	65.8/73.8
	7030007300	S.RES ERJ2GEJ 332 X (3.3 k) [USA-01] only	T	65.8/73.8
R277	7030005050	S.RES ERJ2GEJ 103 X (10 k)	B	4.8/45.6
R278	7030005050	S.RES ERJ2GEJ 103 X (10 k)	T	132.2/29.9
R279	7030005090	S.RES ERJ2GEJ 104 X (100 k)	T	131.3/29.9
R280	7410001130	S.ARY EXB28V102JX	B	95.2/38.9
R281	7030005090	S.RES ERJ2GEJ 104 X (100 k)	T	93.7/48.8
R282	7410000750	S.ARY EXB-V4V 104JV (100 k)	T	97.2/45.3
R283	7410001130	S.ARY EXB28V102JX	T	103.1/21.7
R284	7030005120	S.RES ERJ2GEJ 102 X (1 k)	T	111.2/25.1
R285	7410001130	S.ARY EXB28V102JX	B	107.1/19.9
R286	7410001140	S.ARY EXB28V104JX	T	121.7/22.2
R287	7030004990	S.RES ERJ2GEJ 221 X (220) [EXP-01], [EUR-01] only	T	55.7/72.6
	7030005580	S.RES ERJ2GEJ 560 X (56) [USA-01] only	T	55.7/72.6
R288	7030005100	S.RES ERJ2GEJ 154 X (150 k)	T	54.1/68.2
R289	7030005170	S.RES ERJ2GEJ 474 X (470 k) [USA-01] only	B	38/63.7
R290	7520000260	S.POS PRF18BB471QB1RB [USA-01] only	T	33.9/63
R291	7030005120	S.RES ERJ2GEJ 102 X (1 k)	T	109.2/24.5
R292	7030006070	S.RES ERJ12YJ101U (100)	B	43.6/66.1
R293	7030005120	S.RES ERJ2GEJ 102 X (1 k)	T	50.6/70.5
R294	7030005050	S.RES ERJ2GEJ 103 X (10 k)	T	51.7/68.2
R295	7030008290	S.RES ERJ2GEJ 183 X (18 k)	T	50.6/71.4
R296	7030005040	S.RES ERJ2GEJ 472 X (4.7 k)	T	53.8/64.2
R297	7030008010	S.RES ERJ2GEJ 123 X (12 k)	T	50.5/68.6
R298	7030005090	S.RES ERJ2GEJ 104 X (100 k)	T	45.6/69.9
R300	7030005050	S.RES ERJ2GEJ 103 X (10 k)	B	99.9/59.6
R301	7030007290	S.RES ERJ2GEJ 222 X (2.2 k)	T	106.2/55.6
R302	7030000480	S.RES MCR10EZHJ 6.8 k	T	79/64.4
R303	7030000480	S.RES MCR10EZHJ 6.8 k	T	80.9/64.4
R304	7030000440	S.RES MCR10EZHJ 3.3 k	T	82.8/64.4
R305	7030005050	S.RES ERJ2GEJ 103 X (10 k)	T	40.3/19.4
R306	7030005040	S.RES ERJ2GEJ 472 X (4.7 k)	T	41/21.7
R307	7030005050	S.RES ERJ2GEJ 103 X (10 k)	B	27/63
R309	7030005070	S.RES ERJ2GEJ 683 X (68 k)	T	89.9/7.2
R310	7030004980	S.RES ERJ2GEJ 101 X (100)	B	109.3/62.8
R311	7030000220	S.RES MCR10EZHJ 47 (470)	B	15/76.9
R312	7030005700	S.RES ERJ2GEJ 274 X (270 k)	B	31.5/62.4
R313	7030003370	S.RES ERJ3GEYJ 271 V (270)	B	8.6/54
R314	7030005600	S.RES ERJ2GEJ 273 X (27 k)	B	3/53
R315	7030000220	S.RES MCR10EZHJ 47 (470)	B	3.5/57.4
R316	7030005170	S.RES ERJ2GEJ 474 X (470 k)	T	90.8/11.3
R317	7030005160	S.RES ERJ2GEJ 105 X (1 M)	B	108.3/83.7
R318	7030005160	S.RES ERJ2GEJ 105 X (1 M)	B	112.5/82.7
R319	7030005120	S.RES ERJ2GEJ 102 X (1 k)	B	112.1/81.5
R320	7030005160	S.RES ERJ2GEJ 105 X (1 M)	B	107.2/82.4

[MAIN UNIT] (Other than "MDC compatible")

REF NO.	ORDER NO.	DESCRIPTION	M.	H/V LOCATION
R321	7030004970	S.RES ERJ2GEJ 470 X (47)	B	108.4/82
R322	7030005600	S.RES ERJ2GEJ 273 X (27 k)	B	2.1/79.2
R323	7030003370	S.RES ERJ3GEYJ 271 V (270)	B	6.3/78.7
R324	7030000620	S.RES MCR10EZHJ 100 k	B	5.6/85.5
R325	7030005050	S.RES ERJ2GEJ 103 X (10 k)	B	130.5/45.2
R326	7030005090	S.RES ERJ2GEJ 104 X (100 k)	B	131.8/51.7
R327	7030007290	S.RES ERJ2GEJ 222 X (2.2 k)	B	131.1/54.2
R328	7030005090	S.RES ERJ2GEJ 104 X (100 k)	B	134.2/51.7
R332	7030005090	S.RES ERJ2GEJ 104 X (100 k)	T	109.6/27.9
R333	7030005120	S.RES ERJ2GEJ 102 X (1 k)	T	109.6/26.9
R334	7030000100	S.RES MCR10EZHJ 4.7 (4R7)	T	101.4/79.7
R335	7030005050	S.RES ERJ2GEJ 103 X (10 k)	T	101.8/83.9
R336	7030005120	S.RES ERJ2GEJ 102 X (1 k)	T	111.3/78.5
R337	7410001130	S.ARY EXB28V102JX	T	104.6/75.9
R338	7030005651	S.RES ERA3YKD 304V (300 k)	T	113.6/54.3
R339	7030005871	S.RES ERA3YKD 104V (100 k)	T	113.6/52.9
R340	7030003560	S.RES ERJ3GEYJ 103 V (10 k)	T	136.3/65.7
R341	7030003560	S.RES ERJ3GEYJ 103 V (10 k)	B	130.7/85.9
R342	7030005090	S.RES ERJ2GEJ 104 X (100 k)	B	135.4/52.2
R343	7030007290	S.RES ERJ2GEJ 222 X (2.2 k)	B	138.2/49.4
R344	7030005110	S.RES ERJ2GEJ 224 X (220 k)	B	133.3/54.6
R345	7030005110	S.RES ERJ2GEJ 224 X (220 k)	B	133.3/56.3
R346	7030008410	S.RES ERJ2GEJ 392 X (3.9 k)	B	137/52.2
R347	7030005050	S.RES ERJ2GEJ 103 X (10 k)	B	137.8/53.7
R348	7030005700	S.RES ERJ2GEJ 274 X (270 k)	B	129.1/77.2
R349	7030005090	S.RES ERJ2GEJ 104 X (100 k)	B	127.8/77.7
R350	7030005120	S.RES ERJ2GEJ 102 X (1 k)	B	139.1/47.8
R351	7030004980	S.RES ERJ2GEJ 101 X (100)	B	136.3/38.1
R352	7030008300	S.RES ERJ2GEJ 184 X (180 k)	B	139.7/39
R353	7030005230	S.RES ERJ2GEJ 334 X (330 k)	B	138.2/47.8
R354	7030010040	S.RES ERJ2GEJ-JPW	T	140.4/36
R355	7030008280	S.RES ERJ2GEJ 271 X (270)	B	139.7/34.3
R356	7540000290	ABS ERZV10D220		
R359	7030005090	S.RES ERJ2GEJ 104 X (100 k)	B	114.8/82.9
R360	7030005090	S.RES ERJ2GEJ 104 X (100 k)	T	80.6/5.3
R361	7030005600	S.RES ERJ2GEJ 273 X (27 k)	T	78.4/5.3
R362	7030005050	S.RES ERJ2GEJ 103 X (10 k)	T	124.8/50.2
R363	7030005120	S.RES ERJ2GEJ 102 X (1 k)	T	42.9/38.3
R364	7030009140	S.RES ERJ2GEJ 272 X (2.7 k)	T	42.9/37.4
R365	7030004970	S.RES ERJ2GEJ 470 X (47)	T	38.3/37.9
R366	7030005050	S.RES ERJ2GEJ 103 X (10 k)	B	131.4/63.4
R367	7030005000	S.RES ERJ2GEJ 471 X (470)	B	130.1/63
R368	7030005050	S.RES ERJ2GEJ 103 X (10 k)	T	78.3/7.6
R370	7030005010	S.RES ERJ2GEJ 681 X (680)	T	71.2/70.4
R371	7030005050	S.RES ERJ2GEJ 103 X (10 k)	T	119.5/84.6
R372	7030005040	S.RES ERJ2GEJ 472 X (4.7 k)	T	25.9/8.1
R373	7030005040	S.RES ERJ2GEJ 472 X (4.7 k)	T	74/21.6
R375	7030005030	S.RES ERJ2GEJ 152 X (1.5 k)	T	27.6/5.3
R376	7030005160	S.RES ERJ2GEJ 105 X (1 M)	B	109.1/12.1
R377	7030005160	S.RES ERJ2GEJ 105 X (1 M)	B	110.9/12.1
R378	7410001140	S.ARY EXB28V104JX	B	100.7/18.3
R379	7030005090	S.RES ERJ2GEJ 104 X (100 k)	T	111.6/23.8
R386	7030005120	S.RES ERJ2GEJ 102 X (1 k)	T	105.8/85.1
R387	7030005120	S.RES ERJ2GEJ 102 X (1 k)	T	107.8/85.1
R389	7030005090	S.RES ERJ2GEJ 104 X (100 k)	T	110.4/10.7
C1	4030017420	S.CER ECJ0EC1H470J	T	88.9/54.3
C2	4030017420	S.CER ECJ0EC1H470J	T	89.9/54.3
C3	4030017420	S.CER ECJ0EC1H470J	T	41.5/15.4
C4	4030017420	S.CER ECJ0EC1H470J	B	50/15
C5	4030017460	S.CER ECJ0EB1E102K	T	89.4/34
C6	4550007080	S.TAN TEESVA 1C 106M8R	T	80.8/55.1
C7	4030017420	S.CER ECJ0EC1H470J	T	84/18.4
C8	4030017420	S.CER ECJ0EC1H470J	T	89.9/52
C9	4030016930	S.CER ECJ0EB1A104K	T	88.9/52
C10	4030016930	S.CER ECJ0EB1A104K	T	80.6/50.7
C11	4030016930	S.CER ECJ0EB1A104K	T	10.9/18.8
C12	4030016930	S.CER ECJ0EB1A104K	T	8.5/7.4
C13	4030016930	S.CER ECJ0EB1A104K	T	85.6/10
C14	4030016930	S.CER ECJ0EB1A104K	T	86.6/10
C15	4030017460	S.CER ECJ0EB1E102K	T	41.5/7.7
C16	4550000460	S.TAN TEESVA 1C 105M8R	T	42.7/6.2
C17	4550000460	S.TAN TEESVA 1C 105M8R	B	42.7/6.2
C18	4030017420	S.CER ECJ0EC1H470J	T	41.5/14.5
C19	4030017420	S.CER ECJ0EC1H470J	B	50/15.9
C20	4030016970	S.CER ECJ0EB1C223K	B	100.9/52.3
C21	4030017420	S.CER ECJ0EC1H470J	T	41.5/13.5
C22	4030017420	S.CER ECJ0EC1H470J	T	41.5/12.6
C23	4030016930	S.CER ECJ0EB1A104K	T	51.8/5.6
C24	4030017420	S.CER ECJ0EC1H470J	B	39.8/9.8
C25	4030017420	S.CER ECJ0EC1H470J	T	61.4/6
C26	4030016930	S.CER ECJ0EB1A104K	B	37.2/5.8
C27	4030017760	S.CER ECJ0EB1H222K	B	36.3/7.5
C28	4030016790	S.CER ECJ0EB1C103K	T	79.3/7.6
C29	4030017460	S.CER ECJ0EB1E102K	T	79/13.6
C30	4030016930	S.CER ECJ0EB1A104K	T	78.1/13.6
C31	4030017460	S.CER ECJ0EB1E102K	T	80.6/51.7
C32	4030017500	S.CER ECJ0EC1H560J	B	33.3/15.9
C33	4030016930	S.CER ECJ0EB1A104K	B	34.8/12.8
C34	4030017570	S.CER ECJ0EC1H040B	B	32.1/15.4
C35	4030017590	S.CER ECJ0EC1H070C	B	30.9/15.9
C36	4030016930	S.CER ECJ0EB1A104K	T	22.4/14.9
C37	4030017360	S.CER ECJ0EC1H030B	B	28.3/15.4
C38	4030016930	S.CER ECJ0EB1A104K	T	22/6.2
C39	4030016930	S.CER ECJ0EB1A104K	B	13.6/6.2
C40	4030016930	S.CER ECJ0EB1A104K	T	23.8/6.2
C41	4030016930	S.CER ECJ0EB1A104K	T	22/12.5
C42	4030016930	S.CER ECJ0EB1A104K	T	23/12.5
C43	4030017430	S.CER ECJ0EC1H101J	T	26.4/9.4
C44	4030017430	S.CER ECJ0EC1H101J	T	25.5/9.4
C45	4030017790	S.CER ECJ0EB1E682K	B	91.7/10
C46	4030016930	S.CER ECJ0EB1A104K	B	93.8/10
C47	4030016970	S.CER ECJ0EB1C223K	T	92.1/15.1

M.=Mounted side (T: Mounted on the Top side, B: Mounted on the Bottom side)
S.=Surface mount

[MAIN UNIT] (Other than "MDC compatible")

REF NO.	ORDER NO.	DESCRIPTION	M.	H/V LOCATION
C48	4030017710	S.CER ECJ0EC1H181J	B	49.7/9.1
C49	4550007080	S.TAN TEESVA 1C 106M8R	T	52.1/15.4
C50	4030017460	S.CER ECJ0EB1E102K	T	54.3/12
C51	4030017400	S.CER ECJ0EC1H220J	T	47.8/19
C52	4030017400	S.CER ECJ0EC1H220J	T	44.7/7.8
C53	4030017900	S.CER ECJ0EB1C123K	T	59.1/10.6
C54	4030018080	S.CER ECJ0EB1H182K	T	59.1/11.5
C55	4030016790	S.CER ECJ0EB1C103K	T	64.5/57
C56	4030017620	S.CER ECJ0EC1H100C	T	87.7/35.5
C57	4030016930	S.CER ECJ0EB1A104K	T	80.1/36.7
C58	4030017430	S.CER ECJ0EC1H101J	T	85.2/38.6
C59	4030017460	S.CER ECJ0EB1E102K	T	81.8/24.3
C60	4030017420	S.CER ECJ0EC1H470J	T	82.9/41.5
C63	4030017620	S.CER ECJ0EC1H100C	T	84/39.1
C64	4030017780	S.CER ECJ0EB1E472K	T	81.3/41.3
C65	4030017460	S.CER ECJ0EB1E102K	T	27.6/10.6
C66	4550006050	S.TAN TEESVA 0J 106M8R	T	31.1/6.8
C67	4030017460	S.CER ECJ0EB1E102K	T	27.6/7.1
C68	4030017460	S.CER ECJ0EB1E102K	T	30.5/9
C69	4030017460	S.CER ECJ0EB1E102K	T	32.6/15.4
C70	4030017420	S.CER ECJ0EC1H470J	B	28.3/13.4
C71	4030016940	S.CER ECJ0EB1A393K	B	91.7/8.3
C72	4030018860	S.CER ECJ0EB0J105K	B	50.7/11
C73	4030017750	S.CER ECJ0EB1E122K	B	51.3/16.6
C74	4030016930	S.CER ECJ0EB1A104K	B	52.3/16.6
C75	4030016930	S.CER ECJ0EB1A104K	B	56.2/12.6
C77	4030017460	S.CER ECJ0EB1E102K	B	54.2/16.6
C78	4030017460	S.CER ECJ0EB1E102K	B	53.7/9
C79	4550007080	S.TAN TEESVA 1C 106M8R	T	66.5/55.3
C80	4030017780	S.CER ECJ0EB1E472K	B	79.2/35
C81	4550000460	S.TAN TEESVA 1C 105M8R	B	82.2/36.4
C82	4030017460	S.CER ECJ0EB1E102K	B	84.1/26.9
C83	4550000460	S.TAN TEESVA 1C 105M8R	B	84/32.5
C84	4030017460	S.CER ECJ0EB1E102K	T	78.2/48.8
C85	4030017380	S.CER ECJ0EC1H050B	B	77.1/47.2
C86	4030017350	S.CER ECJ0EC1H020B	B	74.8/48.3
C87	4030017580	S.CER ECJ0EC1H060C	B	73.7/48.3
C88	4030017380	S.CER ECJ0EC1H050B	B	72.4/48.6
C89	4030017580	S.CER ECJ0EC1H060C	B	71.1/49.1
C90	4030017350	S.CER ECJ0EC1H020B	B	70/49.1
C91	4030016790	S.CER ECJ0EB1C103K	T	27.3/17.3
C92	4030017460	S.CER ECJ0EB1E102K	T	25.2/22.4
C93	4030017680	S.CER ECJ0EC1H820J	T	32.6/12.6
C94	4030017460	S.CER ECJ0EB1E102K	B	27.8/12.5
C95	4030016790	S.CER ECJ0EB1C103K	T	28.9/20.1
C96	4030016930	S.CER ECJ0EB1A104K	B	32.8/8.1
C97	4030016930	S.CER ECJ0EB1A104K	B	29.6/9
C98	4030016930	S.CER ECJ0EB1A104K	B	89.3/7.3
C99	4030016930	S.CER ECJ0EB1A104K	B	90.7/14.8
C100	4030016930	S.CER ECJ0EB1A104K	T	87.3/14.3
C101	4030017710	S.CER ECJ0EC1H181J	T	83.9/7.2
C102	4030016930	S.CER ECJ0EB1A104K	T	108/32.8
C103	4030016930	S.CER ECJ0EB1A104K	B	55.3/19.3
C104	4550003250	S.TAN TEESVA 1V 474M8R	B	67.2/24.2
C105	4030017420	S.CER ECJ0EC1H470J	T	49.2/29.4
C106	4030017460	S.CER ECJ0EB1E102K	B	78/29.1
C107	4030016930	S.CER ECJ0EB1A104K	B	54.2/28.8
C109	4550006480	S.TAN TEESVA 1C 475M8R	B	56.1/27.7
C110	4030017420	S.CER ECJ0EC1H470J	T	60.1/27
C111	4030016930	S.CER ECJ0EB1A104K	B	66.3/30.3
C112	4030017460	S.CER ECJ0EB1E102K	B	67.4/30.3
C113	4030017420	S.CER ECJ0EC1H470J	T	72.1/26.6
C114	4030016790	S.CER ECJ0EB1C103K	T	24.3/22.4
C115	4030016790	S.CER ECJ0EB1C103K	T	23/21.2
C116	4030016790	S.CER ECJ0EB1C103K	T	28.5/22.6
C118	4030017640	S.CER ECJ0EC1H150J	T	20.5/28.7
C120	4030016790	S.CER ECJ0EB1C103K	T	32.6/22.5
C121	4030017570	S.CER ECJ0EC1H040B	T	34.8/23.5
C122	4030017390	S.CER ECJ0EC1H180J	T	39.8/28.9
C124	4030016930	S.CER ECJ0EB1A104K	B	90.3/18.9
C125	4030017460	S.CER ECJ0EB1E102K	B	128.5/52.6
C126	4030016930	S.CER ECJ0EB1A104K	T	79.6/20.6
C127	4030016930	S.CER ECJ0EB1A104K	B	82.8/20.1
C128	4030016930	S.CER ECJ0EB1A104K	T	78.4/19.3
C129	4030016930	S.CER ECJ0EB1A104K	B	63.7/16.4
C130	4030016930	S.CER ECJ0EB1A104K	B	135.6/25.4
C131	4030017660	S.CER ECJ0EC1H330J	T	135.9/25.7
C132	4030017660	S.CER ECJ0EC1H330J	T	135.9/18
C133	4030018010	S.CER ECJ0EC1H360J [EXP-01], [EUR-01] only	T	48.1/35.5
C134	4030017640	S.CER ECJ0EC1H150J	T	49.4/34.8
C135	4030017660	S.CER ECJ0EC1H330J	T	64.1/32.5
C136	4030017340	S.CER ECJ0EC1H010B	T	71.1/30.8
C137	4030017570	S.CER ECJ0EC1H040B	T	71.1/29.9
C138	4030017730	S.CER ECJ0EB1E471K	T	71.9/33
C139	4030017390	S.CER ECJ0EC1H120J	T	62.1/32
C140	4030017360	S.CER ECJ0EC1H030B	T	72.5/30.7
C141	4030017360	S.CER ECJ0EC1H030B	T	72.1/29
C142	4030018860	S.CER ECJ0EB0J105K	T	89.5/12.7
C143	4030017400	S.CER ECJ0EC1H220J	T	71.3/36.6
C145	4030016790	S.CER ECJ0EB1C103K	T	31.4/35.2
C147	4030016790	S.CER ECJ0EB1C103K	T	34.5/35.2
C148	4030016790	S.CER ECJ0EB1C103K	T	30.9/26.4
C149	4030016930	S.CER ECJ0EB1A104K	B	78.2/17.4
C150	4030018560	S.CER C2012 JB 1A 475K-T	B	86.9/19.8
C151	4030016930	S.CER ECJ0EB1A104K	T	112.1/46
C152	4030016930	S.CER ECJ0EB1A104K	T	109.6/34.3
C153	4030017460	S.CER ECJ0EB1E102K	T	111.4/34.3
C154	4030018860	S.CER ECJ0EB0J105K	T	82.7/19.8
C155	4030017420	S.CER ECJ0EC1H470J	T	110.3/38.7
C156	4030017910	S.CER ECJ0EB1H152K	T	104.9/42.3
C157	4030017420	S.CER ECJ0EC1H470J	T	110.8/48.6
C158	4030017430	S.CER ECJ0EC1H101J	T	110.3/37.8
C159	4030017460	S.CER ECJ0EB1E102K	T	120.3/5.5

[MAIN UNIT] (Other than "MDC compatible")

REF NO.	ORDER NO.	DESCRIPTION	M.	H/V LOCATION
C160	4030017460	S.CER ECJ0EB1E102K	B	130.6/25.4
C161	4030018010	S.CER ECJ0EC1H360J [EXP-01], [EUR-01] only	T	50.8/43.8
C162	4030017590	S.CER ECJ0EC1H070C [EXP-01], [EUR-01] only	T	52.1/43.4
C163	4030017660	S.CER ECJ0EC1H270J	T	58.7/39.4
C164	4030017660	S.CER ECJ0EC1H390J [USA-01] only	T	48.6/45.8
C165	4030017660	S.CER ECJ0EC1H330J	T	49.9/45.4
C166	4030017580	S.CER ECJ0EC1H060C	T	60.1/38.9
C167	4030017420	S.CER ECJ0EC1H470J	T	70/38.9
C168	4030017660	S.CER ECJ0EC1H330J	T	59.1/40.8
C169	4030017660	S.CER ECJ0EC1H390J	T	60.7/40.4
C170	4030017550	S.CER ECJ0EC1H1R5B	T	70.4/36.6
C171	4030017570	S.CER ECJ0EC1H040B	T	70/37.9
C172	4030017400	S.CER ECJ0EC1H220J	T	70/42.9
C173	4030017400	S.CER ECJ0EC1H220J	T	70/43.9
C174	4030017640	S.CER ECJ0EC1H150J	T	38.3/38.8
C175	4030016790	S.CER ECJ0EB1C103K	B	41.4/39.4
C176	4030016930	S.CER ECJ0EB1A104K	B	41/33.2
C177	4030017730	S.CER ECJ0EB1E471K	B	41/32.2
C178	4030016790	S.CER ECJ0EB1C103K	B	34.5/33
C180	4030017740	S.CER ECJ0EB1E821K	T	109.2/48.6
C181	4030016930	S.CER ECJ0EB1A104K	T	112.1/43.2
C182	4030016780	S.CER ECJ0EB1C153K	T	112.1/39.6
C183	4030017420	S.CER ECJ0EC1H470J	T	104.9/45
C184	4030017760	S.CER ECJ0EB1H222K	T	104.9/45.9
C185	4030017690	S.CER ECJ0EC1H121J	T	107.8/48.6
C186	4030016790	S.CER ECJ0EB1C103K	T	51.7/45.4
C187	4030017460	S.CER ECJ0EB1E102K	T	52.6/45.4
C188	4030016790	S.CER ECJ0EB1C103K	T	62.7/40.4
C189	4030017460	S.CER ECJ0EB1E102K	T	63.7/40.4
C190	4030017540	S.CER ECJ0EC1HR75B	T	55/48.3
C191	4030016790	S.CER ECJ0EB1C103K	T	70/40.9
C192	4030017540	S.CER ECJ0EC1HR75B	T	57.7/43
C193	4030017460	S.CER ECJ0EB1E102K	T	70/39.9
C194	4030017530	S.CER ECJ0EC1H0R5B	T	60/44.4
C195	4030016930	S.CER ECJ0EB1A104K	B	39/30
C196	4030017730	S.CER ECJ0EB1E471K	B	38.1/33.2
C197	4030016930	S.CER ECJ0EB1A104K	B	38.1/32.2
C198	4030017730	S.CER ECJ0EB1E471K	B	31.3/38.3
C199	4030016930	S.CER ECJ0EB1A104K	B	31.3/39.2
C200	4030016930	S.CER ECJ0EB1A104K	B	31.3/34
C201	4030017730	S.CER ECJ0EB1E471K	B	31.3/33.1
C202	4030017460	S.CER ECJ0EB1E102K	T	112.1/38.7
C203	4030017460	S.CER ECJ0EB1E102K	B	100.9/47
C205	4030018900	S.CER ECJ0EB0J474K	T	78.4/18.4
C206	4030016930	S.CER ECJ0EB1A104K	T	78.5/16.7
C207	4030017730	S.CER ECJ0EB1E471K	T	61/45.7
C208	4030017460	S.CER ECJ0EB1E102K	T	60/45.7
C209	4030017460	S.CER ECJ0EB1E102K	B	65/52.7
C210	4030017590	S.CER ECJ0EC1H070C	B	57.6/50.3
C211	4030017620	S.CER ECJ0EC1H100C	B	60/51.4
C212	4030017460	S.CER ECJ0EB1E102K	B	63.8/50.8
C214	4030017460	S.CER ECJ0EB1E102K	B	66.8/41.3
C215	4030017390	S.CER ECJ0EC1H180J	B	38.5/47.6
C216	4030017660	S.CER ECJ0EC1H330J	B	43.1/47.6
C217	4030017730	S.CER ECJ0EB1E471K	B	25/32.7
C218	4030016930	S.CER ECJ0EB1A104K	B	25/31.7
C219	4030017650	S.CER ECJ0EC1H270J	B	23/36.3
C220	4030017600	S.CER ECJ0EC1H080C	B	23/38
C221	4030016930	S.CER ECJ0EB1A104K	B	5.6/23.2
C222	4030017030	S.CER ECJ0EB1A273K	B	128.6/45.3
C223	4030016930	S.CER ECJ0EB1A104K	B	126.3/48.2
C224	4030017640	S.CER ECJ0EC1H150J	T	124.2/40.1
C225	4030016790	S.CER ECJ0EB1C103K	T	124.2/37.4
C226	4030017580	S.CER ECJ0EC1H060C	T	124.2/41.1
C227	4030017460	S.CER ECJ0EB1E102K	B	57.6/53.5
C228	4030017460	S.CER ECJ0EB1E102K	B	56.4/53.1
C229	4030017620	S.CER ECJ0EC1H100C	B	52.1/53.1
C230	4030017460	S.CER ECJ0EB1E102K	B	63.5/62.3
C231	4030017360	S.CER ECJ0EC1H030B	B	66.3/52.2
C232	4030017460	S.CER ECJ0EB1E102K	B	68.6/49.5
C235	4030017460	S.CER ECJ0EB1E102K	B	44.4/50.7
C236	4030017390	S.CER ECJ0EC1H180J	B	47.8/48.1
C237	4030017620	S.CER ECJ0EC1H100C	B	47.4/49.4
C240	4030017460	S.CER ECJ0EB1E102K	B	18.9/34.4
C241	4030017360	S.CER ECJ0EC1H030B	B	17/37.7
C242	4030017460	S.CER ECJ0EB1E102K	B	15/34.4
C243	4030017460	S.CER ECJ0EB1E102K	B	18.9/33.5
C244	4030017460	S.CER ECJ0EB1E102K	B	15.7/31.7
C245	4550006780	S.TAN TEESVB2 0J 476M8R	B	5.6/18.7
C246	4030016930	S.CER ECJ0EB1A104K	B	105.1/52.2
C247	4030016930	S.CER ECJ0EB1A104K	B	107/52.9
C248	4030016930	S.CER ECJ0EB1A104K	B	108.1/52
C249	4030018900	S.CER ECJ0EB0J474K	B	121.8/47.4
C250	4030017630	S.CER ECJ0EC1H120J	T	120.4/40.1
C251	4030017400	S.CER ECJ0EC1H220J	B	61.9/64.2
C252	4030017420	S.CER ECJ0EC1H470J	B	62.6/71.1
C253	4030017730	S.CER ECJ0EB1E471K	B	61.6/71.1
C254	4030017420	S.CER ECJ0EC1H470J	B	63.9/69.5
C256	4030017460	S.CER ECJ0EB1E102K	B	59.7/65.5
C257	4030017460	S.CER ECJ0EB1E102K	B	63.4/67.4
C258	4030017460	S.CER ECJ0EB1E102K	T	13.9/32.5
C259	4030017460	S.CER ECJ0EB1E102K	T	10/35
C260	4030017590	S.CER ECJ0EC1H100C	B	14.2/36.3
C261	4030017460	S.CER ECJ0EB1E102K	B	9.5/33.9
C262	4030017460	S.CER ECJ0EB1E102K	B	13.7/37.7
C263	4030017490	S.CER C1608 JB 1A 105K-T	T	14.1/33.7
C264	4030017350	S.CER ECJ0EC1H020B	B	8.4/38.6
C265	4030017420	S.CER ECJ0EC1H470J	B	8.6/36.3
C266	4030017460	S.CER ECJ0EB1E102K	B	9.5/36.3
C267	4030017460	S.CER ECJ0EB1E102K	B	63.9/70.5
C268	4030017640	S.CER ECJ0EC1H150J	B	68.2/69.1

M.=Mounted side (T: Mounted on the Top side, B: Mounted on the Bottom side)
S.=Surface mount

[MAIN UNIT] (Other than "MDC compatible")

REF NO.	ORDER NO.	DESCRIPTION	M.	H/V LOCATION
C269	4030017390	S.CER ECJ0EC1H180J [USA-01] only	B	69.7/69.1
	4030017650	S.CER ECJ0EC1H270J [EXP-01], [EUR-01]	B	69.7/69.1
C270	4030017390	S.CER ECJ0EC1H180J	B	71.2/69
C271	4030017390	S.CER ECJ0EC1H180J [EXP-01], [EUR-01]	T	74.3/71.7
	4030017400	S.CER ECJ0EC1H220J [USA-01]	T	74.3/71.7
C272	4030016930	S.CER ECJ0EB1A104K	T	7.9/39.5
C273	4030016930	S.CER ECJ0EB1A104K	T	9.5/39.5
C274	4030017460	S.CER ECJ0EB1E102K	T	7.4/41.2
C275	4030016930	S.CER ECJ0EB1A104K	T	15/41
C276	4030017620	S.CER ECJ0EC1H100C	B	10.5/41
C277	4030017460	S.CER ECJ0EB1E102K	T	14/41
C278	4030017350	S.CER ECJ0EC1H020B	B	8.9/43.6
C279	4030017460	S.CER ECJ0EB1E102K	B	6.9/44.2
C280	4030017550	S.CER ECJ0EC1H1R5B	B	9.4/46.1
C281	4030017420	S.CER ECJ0EC1H470J	T	97.9/34.2
C282	4030017420	S.CER ECJ0EC1H470J	T	102.1/40
C283	4030017420	S.CER ECJ0EC1H470J	B	97.4/44.6
C284	4030017420	S.CER ECJ0EC1H470J	T	94.8/35.5
C285	4030017420	S.CER ECJ0EC1H470J	B	94.2/44.4
C286	4030017420	S.CER ECJ0EC1H470J	T	92.1/43.3
C287	4030017420	S.CER ECJ0EC1H470J	T	92.1/41.6
C288	4030017460	S.CER ECJ0EB1E102K	B	4.8/46.5
C290	4030017400	S.CER ECJ0EC1H220J	T	74.3/73.6
C291	4030017730	S.CER ECJ0EB1E471K	T	69.3/76.1
C292	4550000560	S.TAN TEESVA 1V 334M8R	T	67.6/74.4
C294	4030017420	S.CER ECJ0EC1H470J	T	70.4/76.1
C295	4030017420	S.CER ECJ0EC1H470J	T	56.7/67.3
C296	4510008530	S.ELE EEE1HA2R2SR	T	59.6/80
C297	4030017460	S.CER ECJ0EB1E102K	T	56.7/68.3
C299	4030017460	S.CER ECJ0EB1E102K	B	6.9/47.9
C300	4030017340	S.CER ECJ0EC1H010B	B	8.9/48.5
C301	4030017580	S.CER ECJ0EC1H060C	B	13.2/49.5
C302	4030017460	S.CER ECJ0EB1E102K	B	4.4/44.4
C303	4030016930	S.CER ECJ0EB1A104K	B	129.6/32
C304	4030017420	S.CER ECJ0EC1H470J	B	90/43.4
C305	4030011140	S.CER GRM31M2C2H120JV01L	T	27.6/78.7
C306	4030011120	S.CER GRM31M2C2H100JV01L	T	27.6/76.1
C307	4030011120	S.CER GRM31M2C2H100JV01L	T	27.7/71.8
C308	4030011070	S.CER GRM31M2C2H5R0CY21L [USA-01]	T	27.7/69.2
	4030011140	S.CER GRM31M2C2H120JV01L [EXP-01], [EUR-01]	T	27.7/69.2
C309	4030017460	S.CER ECJ0EB1E102K	T	71.5/76.1
C310	4030017420	S.CER ECJ0EC1H470J	T	43/76.1
C311	4030017460	S.CER ECJ0EB1E102K	T	44.1/76.1
C312	4030017730	S.CER ECJ0EB1E471K	T	45.3/76.1
C313	4510008680	S.ELE EEE1EA220SP	T	51.7/77.7
C314	4030017730	S.CER ECJ0EB1E471K	B	40.2/68.3
C315	4030017460	S.CER ECJ0EB1E102K	T	55.7/73.6
C316	4030016790	S.CER ECJ0EB1C103K	T	54.1/72.6
C317	4030011600	S.CER C1608 JB 1E 104K-T	T	54.1/67
C318	4030017460	S.CER ECJ0EB1E102K [USA-01] only	T	35.1/63.3
C319	4030017460	S.CER ECJ0EB1E102K [USA-01] only	T	47.3/67.4
C320	4030017580	S.CER ECJ0EC1H060C	B	15/52.7
C321	4030017460	S.CER ECJ0EB1E102K	B	14.9/49.5
C322	4030017600	S.CER ECJ0EC1H080C	B	19.3/52
C323	4030017570	S.CER ECJ0EC1H040B	B	20/49.6
C324	4030017420	S.CER ECJ0EC1H470J	B	90/41.8
C325	4030017460	S.CER ECJ0EB1E102K	T	72.5/64.9
C326	4030017420	S.CER ECJ0EC1H470J	B	46.2/64.3
C327	4030017460	S.CER ECJ0EB1E102K	B	84.2/79
C328	4030017460	S.CER ECJ0EB1E102K	B	83.2/79
C329	4030017460	S.CER ECJ0EB1E102K	B	82.1/79
C330	4030017460	S.CER ECJ0EB1E102K	B	81/79
C331	4030017460	S.CER ECJ0EB1E102K	B	80/79
C332	4030016930	S.CER ECJ0EB1A104K	T	51.9/71.9
C334	4030017460	S.CER ECJ0EB1E102K	T	49.5/68.6
C335	4030017460	S.CER ECJ0EB1E102K	T	53.8/63.2
C336	4030017580	S.CER ECJ0EC1H060C	B	20.8/52
C337	4030017390	S.CER ECJ0EC1H180J	B	25.1/51.2
C338	4510008600	S.ELE EEE1CA4R7NR	T	79.1/69.1
C339	4030017460	S.CER ECJ0EB1E102K	T	79.1/62.1
C340	4030017460	S.CER ECJ0EB1E102K	T	37.5/20.8
C341	4030016790	S.CER ECJ0EB1C103K	T	41.9/19.4
C342	4030017200	S.CER GRM31BR32J102KY01L	T	25.3/62.5
C343	4030011270	S.CER GRM31M2C2H200JV01L	T	22.1/63.9
C345	4030011170	S.CER GRM31M2C2H180JV01L	T	17.3/57.4
C346	4030011170	S.CER GRM31M2C2H180JV01L	T	30.2/62.8
C347	4030017520	S.CER ECJ0EC1H0R3B	B	25.4/63
C348	4030017460	S.CER ECJ0EB1E102K	B	31.5/63.4
C349	4030016930	S.CER ECJ0EB1A104K	T	100.5/63.5
C350	4550005980	S.TAN TEESVA 1A 475M8R	T	101.6/62
C351	4030018860	S.CER ECJ0EB0J105K [EXP-01], [EUR-01] only	T	110.6/67.4
C352	4030017460	S.CER ECJ0EB1E102K	B	124.6/59.6
C353	4550005980	S.TAN TEESVA 1A 475M8R	B	124.5/61.3
C354	4550006250	S.TAN TEESVA 1A 106M8R	B	112.9/61.7
C355	4030017420	S.CER ECJ0EC1H470J	B	112.6/60.1
C356	4030011270	S.CER GRM31M2C2H200JV01L	T	14.7/62.9
C357	4030011270	S.CER GRM31M2C2H200JV01L	T	10.4/62.9
C358	4030007030	S.CER C1608 CH 1H 150J-T	B	10.6/56.4
C359	4030011340	S.CER C1608 CH 1H 471J-T	B	9.4/56.4
C360	4030017460	S.CER ECJ0EB1E102K	B	4/53
C361	4030017460	S.CER ECJ0EB1E102K	T	103.9/53.5
C362	4030017460	S.CER ECJ0EB1E102K	T	108.2/24.5
C363	4510008540	S.ELE EEE1CA100SR	T	139.1/31.9
C365	4550007650	S.TAN F931V105MAABMA	B	106.7/65
C366	4550007650	S.TAN F931V105MAABMA	B	104.2/65
C367	4550007650	S.TAN F931V105MAABMA	B	101.6/65
C368	4550007650	S.TAN F931V105MAABMA	B	99.5/64.6
C369	4030011270	S.CER GRM31M2C2H200JV01L	T	15.8/78.9
C370	4030011270	S.CER GRM31M2C2H200JV01L	T	15.8/83.1

[MAIN UNIT] (Other than "MDC compatible")

REF NO.	ORDER NO.	DESCRIPTION	M.	H/V LOCATION
C371	4030017460	S.CER ECJ0EB1E102K	B	4.1/81.6
C372	4030006850	S.CER C1608 JB 1H 471K-T	B	8.3/77.1
C373	4030016930	S.CER ECJ0EB1A104K	B	130.9/51.7
C374	4030016930	S.CER ECJ0EB1A104K	B	133/51.3
C375	4030016930	S.CER ECJ0EB1A104K	B	132.4/54.6
C377	4030017460	S.CER ECJ0EB1E102K	T	105.9/51.9
C378	4030017460	S.CER ECJ0EB1E102K	T	108.2/78
C379	4030016930	S.CER ECJ0EB1A104K	B	108.4/80.3
C380	4030017460	S.CER ECJ0EB1E102K	B	120.5/83.2
C381	4030016790	S.CER ECJ0EB1C103K	B	135.9/70.5
C383	4030017460	S.CER ECJ0EB1E102K	B	135.9/71.5
C384	4510008870	S.ELE EEE1AA471UP	T	129.9/64.9
C386	4030016930	S.CER ECJ0EB1A104K	B	138.8/53.7
C387	4030017720	S.CER ECJ0EB1H331K	B	135.4/51.3
C388	4030018860	S.CER ECJ0EB0J105K	B	138.6/52.2
C389	4030016930	S.CER ECJ0EB1A104K	B	139.1/49.4
C390	4030016930	S.CER ECJ0EB1A104K	B	137.8/55.4
C391	4030016930	S.CER ECJ0EB1A104K	T	101.8/82.3
C392	4030017460	S.CER ECJ0EB1E102K	B	127.8/76.8
C393	4030017460	S.CER ECJ0EB1E102K	B	99/79
C394	4030017420	S.CER ECJ0EC1H470J	B	115.4/68
C395	4030017460	S.CER ECJ0EB1E102K	B	126.5/77.1
C397	4030017460	S.CER ECJ0EB1E102K	B	99.8/86.3
C398	4030017420	S.CER ECJ0EC1H470J	B	100.8/86.3
C399	4030018860	S.CER ECJ0EB0J105K	B	136.3/37.1
C400	4030016930	S.CER ECJ0EB1A104K	B	139.7/35.3
C411	4510008780	S.ELE EEE1EA471P	T	117.2/63.6
C412	4510008780	S.ELE EEE1EA471P	T	132.7/54.3
C413	4030018900	S.CER ECJ0EB0J474K	B	135.1/46.8
C414	4510008540	S.ELE EEE1CA100SR	T	118.7/50.5
C415	4030016930	S.CER ECJ0EB1A104K	B	103/23.8
C416	4030016930	S.CER ECJ0EB1A104K	B	120.3/51.6
C417	4030016790	S.CER ECJ0EB1C103K	B	115.6/52.8
C418	4030017460	S.CER ECJ0EB1E102K	T	109.6/54.5
C419	4030016790	S.CER ECJ0EB1C103K	T	42.9/39.2
C420	4030017500	S.CER ECJ0EC1H560J	T	41/37.4
C421	4030016930	S.CER ECJ0EB1A104K	B	36/24.7
C422	4030016790	S.CER ECJ0EB1C103K	T	43.1/31.9
C423	4030018010	S.CER ECJ0EC1H390J	T	39.9/35.3
C424	4030016930	S.CER ECJ0EB1A104K	T	38.9/32.2
C425	4030017460	S.CER ECJ0EB1E102K	B	134.8/66.1
C426	4030018860	S.CER ECJ0EB0J105K	B	110/12.1
C427	4030017460	S.CER ECJ0EB1E102K	B	109.1/10.4
C430	4030017570	S.CER ECJ0EC1H040B	T	78.2/44.8
J1	6510025220	S.CNR AXK540145J	T	124.5/9.7
J2	6510025220	S.CNR AXK540145J	T	101.5/9.7
J3	6510021301	S.CNR 52365-1071	T	90.3/62.6
J5	6510023091	S.CNR 20FLT-SM2-TB (LF) (SN)	T	108.3/81.8
J7	6450000140	CNR HSJ0807-01-010		
J10	6510023091	S.CNR 20FLT-SM2-TB (LF) (SN)	T	71/7
W1	7120000470	JMP ERDS2T0		
W2	8900016250	CBL OPC-1701 <CMI>T/H!		
EP1	6910015600	S.BEA ACZ1005Y-241 (240)	B	39.8/8.1
EP2	6910015370	S.BEA ACZ1005Y-102-T	B	50.1/12.4
EP3	6910015370	S.BEA ACZ1005Y-102-T	T	82.6/37.1
EP4	6910010280	BEA HF70BB9.5X10.4X4.9		
EP5	6910010280	BEA HF70BB9.5X10.4X4.9		
EP6	6910011560	BEA HF70BB4.5X5X1.6		

[MAIN-A UNIT] (MDC compatible)

REF NO.	ORDER NO.	DESCRIPTION		M.	H/V LOCATION
IC1	1110005340	S.IC	NJM12902V-TE1-#ZZZB	T	82.3/12.9
IC2	1110006221	S.IC	AK2346P-E2/P	B	44.7/11.7
IC3	1140013200	S.IC	CD4053BPWR	B	58.7/9.3
IC4	1130010100	S.IC	LMX2352TMX/NOPB	T	82.9/46
IC5	1110003491	S.IC	TA31136FNG (D,EL)	T	28/13.9
IC6	1190001350	S.IC	M62364FP 600D	B	84.9/12.9
IC7	1110005340	S.IC	NJM12902V-TE1-#ZZZB	T	108.5/43.7
IC8	1140013200	S.IC	CD4053BPWR	B	58.7/16.1
IC9	1130012960	S.IC	BU8872FS-E2	B	133.1/21.3
IC10	1190002051	S.IC	SPM5001-TL-E	B	33.8/36.9
IC12	1190001340	S.IC	M62334FP 600C	B	9.1/25.7
IC13	1110005771	S.IC	S-80942CNMC-G9CT2G	B	126/44.8
IC14	1140014550	S.IC	HD64F2506RFC26DV	B	111.8/35.7
IC15	1150002042	IC	RA30H1317M-121 [EXP-02], [EUR-02]		
	1150002073	IC	RA60H1317M-125 [USA-02], [F5061D]		
IC16	1140014160	S.IC	24LC1025T-I/SM	B	133.3/29
IC17	1110002751	S.IC	TA75S01F (TE85R,F)	T	54.1/70.4
IC18	1180000970	S.IC	AN78L05M-(E1)	B	113/65.3
IC19	1120002510	S.IC	DS14C232TM S	T	104.7/70.5
IC20	1180001251	S.IC	TA7808F (TE16L,Q)	B	121.5/65.8
IC21	1110003091	IC	LA4425A-E		
IC22	1110002751	S.IC	TA75S01F (TE85R,F)	B	135.5/54.4
IC23	1130006221	S.IC	TC4W53FU (TE12L,F)	B	106.9/9.6
IC25	1110006230	S.IC	NJM2711F-TE1-#ZZZB	B	26.1/6.6
Q1	1590003230	S.TR	UNR9113J-(TX)	B	15.2/6
Q3	1530002851	S.TR	2SC4116-BL (TE85R,F)	B	36.4/15.5
Q4	1590001650	S.TR	XP4601 (TX)	B	92.8/12.4
Q5	1590003290	S.TR	UNR9213J-(TX)	B	76.7/50
Q6	1530002851	S.TR	2SC4116-BL (TE85R,F)	T	63.2/55.1
Q7	1560000541	S.FET	2SK880-Y (T5RICOM,F)	B	81.2/27.1
Q8	1530002851	S.TR	2SC4116-BL (TE85R,F)	B	79.2/31.8
Q9	1530002851	S.TR	2SC4116-BL (TE85R,F)	B	81.7/31.8
Q10	1560001360	S.FET	2SK3019 TL	B	57/31.6
Q12	1530002601	S.TR	2SC4215-O (TE85R,F)	T	26.9/20
Q16	1590003290	S.TR	UNR9213J-(TX)	T	113.2/47.6
Q17	1530002920	S.TR	2SC4226-T1 R25	T	50.9/47.6
Q18	1530002920	S.TR	2SC4226-T1 R25	T	61.6/42.6
Q19	1530002920	S.TR	2SC4226-T1 R25	T	72.1/43
Q20	1590003230	S.TR	UNR9113J-(TX)	B	33.9/25.2
Q22	1530003311	S.TR	2SC5107-O (TE85R,F)	T	58.1/46.3
Q23	1590001400	S.TR	XP1214 (TX)	B	55.7/40.9
Q24	1590003280	S.TR	UNR9211J-(TX)	B	55.8/38.2
Q25	1530003311	S.TR	2SC5107-O (TE85R,F)	B	65.9/49.5
Q26	1590001400	S.TR	XP1214 (TX)	B	67.2/43.1
Q27	1590003230	S.TR	UNR9113J-(TX)	T	124.7/52
Q28	1590003290	S.TR	UNR9213J-(TX)	B	123.4/46.3
Q29	1530003311	S.TR	2SC5107-O (TE85R,F)	B	53.5/51.2
Q30	1530000372	S.TR	2SC3356-T1B R (R24)	B	65.5/66
Q31	1580000731	S.FET	3SK293 (TE85L,F)	B	10.2/38.6
Q32	1560000841	S.FET	2SK1829 (TE85R,F)	T	11/42.5
Q33	1530002851	S.TR	2SC4116-BL (TE85R,F) [USA-02], [F5061D] only	T	47.5/69.4
Q34	1590003290	S.TR	UNR9213J-(TX)	T	83/67.4
Q35	1520000460	S.TR	2SB1132 T100 R	T	100.1/57.9
Q36	1590001190	S.TR	XP6501-(TX) .AB	T	104.3/55.8
Q37	1540000550	S.TR	2SD1664 T100Q	T	75.5/63.6
Q38	1510000920	S.TR	2SA1577 T106 Q	T	39.3/21.3
Q39	1590003290	S.TR	UNR9213J-(TX)	T	42.6/21.3
Q40	1590003290	S.TR	UNR9213J-(TX)	T	104.1/51.9
Q41	1590001451	S.FET	2SJ144-GR (TE85R,F)	B	110.3/83.3
Q42	1590003290	S.TR	UNR9213J-(TX)	B	132.1/45
Q43	1590000990	S.TR	DTC363EK T146	B	135.7/49
Q44	1590003290	S.TR	UNR9213J-(TX)	T	108.5/21.6
Q45	1590003290	S.TR	UNR9213J-(TX)	B	133.3/58.9
Q46	1590003290	S.TR	UNR9213J-(TX)	T	117.9/84.4
Q47	1550000100	S.FET	2SJ377 (TE16L1,NQ)	B	131.3/71.5
Q48	1590003290	S.TR	UNR9213J-(TX)	B	127.4/78
Q49	1530002851	S.TR	2SC4116-BL (TE85R,F)	B	139.3/37.2
Q50	1530002601	S.TR	2SC4215-O (TE85R,F)	T	40.6/39.2
Q51	1590003321	S.FET	TPC6103 (TE85L,F)	B	133.6/63.4
Q52	1590003290	S.TR	UNR9213J-(TX)	B	128.2/61.1
Q53	1590000430	S.TR	DTC144EUA T106	B	52.3/67.4
Q54	1590000430	S.TR	DTC144EUA T106	T	25.5/6.3
Q55	1560001360	S.FET	2SK3019 TL	T	75.5/20.9
Q57	1590003290	S.TR	UNR9213J-(TX)	T	112/14.4
Q58	1530002851	S.TR	2SC4116-BL (TE85R,F)	B	24.9/9.5
Q59	1590003290	S.TR	UNR9213J-(TX)	B	96.6/8
Q60	1590003290	S.TR	UNR9213J-(TX)	B	97.8/11.6
D1	1750001070	S.DIO	DAN235ETL	T	10.4/15.7
D2	1750001070	S.DIO	DAN235ETL	T	22.6/8.9
D3	1790001250	S.DIO	MA2S111-(TX)	T	61.3/55
D4	1790001260	S.DIO	MA2S077-(TX)	B	72.9/49.8
D5	1790001260	S.DIO	MA2S077-(TX)	B	71.1/51.3
D6	1750001070	S.DIO	DAN235ETL	T	30.6/20.8
D7	1160000140	S.DIO	DAP222 TL	T	58.9/14
D8	1720000791	S.VCP	HVC321B1TRF-E	T	49.5/32.4
D9	1720000791	S.VCP	HVC321B1TRF-E	T	52.7/32.4
D10	1720000791	S.VCP	HVC321B1TRF-E	T	60.5/30
D11	1720000641	S.VCP	1SV284 (TPH3,F)	T	52.7/33.6
D12	1720000641	S.VCP	1SV284 (TPH3,F)	T	52.7/34.8
D13	1720000791	S.VCP	HVC321B1TRF-E	T	63.8/28.6
D14	1720000791	S.VCP	HVC321B1TRF-E	T	73.6/30.4
D15	1720000641	S.VCP	1SV284 (TPH3,F)	T	63.8/31.3
D17	1720000791	S.VCP	HVC321B1TRF-E	T	72.1/27.9
D18	1750000721	S.VCP	HVC375BTRF-E	T	69.8/33.3
D19	1160000140	S.DIO	DAP222 TL	B	120.5/17.8
D20	1720000471	S.VCP	1SV239 (TPH3,F)	T	69.4/34.9
D21	1750001070	S.DIO	DAN235ETL	T	36.3/38.3

[MAIN-A UNIT] (MDC compatible)

REF NO.	ORDER NO.	DESCRIPTION		M.	H/V LOCATION
D22	1750000520	S.DIO	DAN222TL	T	124.7/54.5
D23	1790001260	S.DIO	MA2S077-(TX)	T	125.6/39.2
D24	1790001260	S.DIO	MA2S077-(TX)	B	50.7/53.2
D25	1790001260	S.DIO	MA2S077-(TX)	B	49.3/50.8
D26	1750000711	S.VCP	HVC350BTRF-E	B	17.7/36
D27	1750000711	S.VCP	HVC350BTRF-E	B	16.2/36
D30	1750000721	S.VCP	HVC375BTRF-E	B	8.6/44.7
D31	1790001250	S.DIO	MA2S111-(TX)	T	8.5/43.7
D32	1750001080	S.DIO	RB886G T2R	T	64.1/76.5
D33	1750001080	S.DIO	RB886G T2R	T	65.8/75.8
D34	1750000721	S.VCP	HVC375BTRF-E	B	8.6/47.4
D35	1790001260	S.DIO	MA2S077-(TX)	B	17.9/48.1
D37	1750000370	S.DIO	DA221 TL	T	75.5/67.6
D38	1750000511	S.DIO	UX9401F-STD/TR [EXP-02], [EUR-02] only	T	30/66
D39	1710001061	DIO	L407CDB[USA-02], [F5061D] only		
D42	1750001360	S.DIO	L709CER (9401)	T	34.6/58.7
D45	1750000520	S.DIO	DAN222TL	T	91.8/57.5
D46	1750000520	S.DIO	DAN222TL	T	89.6/57.5
D47	1790001211	S.DIO	1SS375-TL-E	B	29.2/63.8
D48	1750000520	S.DIO	DAN222TL	B	93/61.5
D49	1790001211	S.DIO	1SS375-TL-E	B	6/52.8
D50	1750000370	S.DIO	DA221 TL	B	97.2/65.8
D51	1790001211	S.DIO	1SS375-TL-E	B	3.9/79.7
D52	1750000520	S.DIO	DAN222TL	B	132.5/41
D53	1790001250	S.DIO	MA2S111-(TX)	B	133.3/47.3
D55	1750000370	S.DIO	DA221 TL	B	108.8/57.4
D56	1750000370	S.DIO	DA221 TL	T	108.8/60.6
D57	1750000370	S.DIO	DA221 TL	B	95.1/65.8
D58	1750000520	S.DIO	DAN222TL	T	94/57.5
D59	1750000520	S.DIO	DAN222TL	B	104/80.4
D62	1790000700	DIO	DSA3A1		
D63	1750000520	S.DIO	DAN222TL	B	110.3/80.9
D65	1750000520	S.DIO	DAN222TL	B	129.7/58.9
D66	1790001621	S.DIO	1SV308 (TPL3,F)	T	33.9/38.8
D67	1790001621	S.DIO	1SV308 (TPL3,F)	T	33.9/37.5
D68	1790001621	S.DIO	1SV308 (TPL3,F)	T	29.9/23.2
D69	1790001621	S.DIO	1SV308 (TPL3,F)	T	31.2/23.2
D70	1750000351	S.DIO	1SV252 (TE85L,F)	T	73.6/75.5
D71	1730002410	S.ZEN	MA8200-H (TX)	T	118.3/86.3
D72	1750000520	S.DIO	DAN222TL	T	87.4/57.5
D73	1750000520	S.DIO	DAN222TL	B	93/64.5
FI1	2020001410	CER	CFWLB450KGFA-B0		
FI2	2020002470	S.CER	CFWKA450KHFA001-R0	T	15.4/9.3
FI3	2030000500	S.MLH	FL-401 (46.35 MHz)	T	24.7/28.4
FI4	2030000670	S.MLH	FL-420 (46.35 MHz)	T	35.6/28.4
FI5	2040001440	S.LC	NFE31PT152Z1E9L	B	94.5/77
FI6	2040001440	S.LC	NFE31PT152Z1E9L	B	94.5/73.7
FI7	2040001440	S.LC	NFE31PT152Z1E9L [USA-02], [F5061D]	B	94.5/70.3
X1	6050012380	S.XTL	CR-826 (15.3 MHz)	T	84.2/34.7
X2	6050011730	S.XTL	CR-765 (3.6864 MHz)	T	48.3/11.6
X3	6070000300	S.DCR	JTBM450CX24 <JJE>	T	37.1/10.3
X4	6050012320	S.XTL	CR-818 (4.194304 MHz)	T	139.1/21.9
X5	6050011720	S.XTL	CR-764 (19.6608 MHz)	T	120.5/44.3
L1	6200004660	S.COL	MLF1608A 1R8K-T	T	82.7/54.3
L2	6200003540	S.COL	MLF1608D R22K-T	B	34.4/14.7
L3	6200004480	S.COL	MLF1608D R82K-T	B	29.7/16.2
L4	6200007911	S.COL	ELJRF 18NJFB	B	75.9/48.3
L5	6200007120	S.COL	ELJND 1R0J	T	49.4/30.8
L6	6200007120	S.COL	ELJND 1R0J	T	52.7/30.8
L7	6200007120	S.COL	ELJND 1R0J	T	60.5/28.4
L8	6200007170	S.COL	MLF1608A 3R3K-T	T	74/27.5
L9	6200007170	S.COL	MLF1608A 3R3K-T	T	69.8/32
L10	6200010600	S.COL	C6342A-67NG-A	T	51.2/39.2
L11	6200003640	S.COL	MLF1608E 100K-T	T	48.3/33.6
L12	6200009910	S.COL	C6342A-88NG-A	T	61.6/35.5
L13	6200007120	S.COL	ELJND 1R0J	T	63.8/27
L14	6200003640	S.COL	MLF1608E 100K-T	T	60/31.4
L15	6200012450	S.COL	0.25-1.9-8TL 73N (COAT)	T	73.3/35.9
L16	6200008090	S.COL	LQW2BHN68NJ03L	T	69.5/28
L17	6200003640	S.COL	MLF1608E 100K-T	T	73.7/32.6
L18	6130003000	S.COL	#617DB-1714=P3	B	39/36.2
L19	6130003000	S.COL	#617DB-1714=P3	B	34.5/42.6
L20	6200009181	S.COL	ELJRE R10JFA	T	57.3/48.3
L21	6200007911	S.COL	ELJRF 18NJFB	B	66.3/51.2
L22	6200005721	S.COL	ELJRE 33NGFA	B	40.6/48.1
L23	6200005721	S.COL	ELJRE 33NGFA	B	45.5/48.1
L24	6130003000	S.COL	#617DB-1714=P3	B	27/36.2
L25	6200009151	S.COL	ELJRE 82NJFA	B	54.2/53.4
L26	6200010720	S.COL	C2520C-56NG-A	B	20.9/37
L27	6200009181	S.COL	ELJRE R10JFA	B	66.5/69.4
L28	6200010720	S.COL	C2520C-56NG-A	B	11.7/35.1
L29	6200009171	S.COL	ELJRE 47NJFA	B	70.5/70.8
L30	6200009171	S.COL	ELJRE 47NJFA	T	72.6/72.7
L31	6200011410	S.COL	C2520C-82NG-A	B	7.8/41.5
L32	6200011410	S.COL	C2520C-82NG-A	B	9.9/50.6
L33	6200010050	S.COL	AS080547-47N	T	33.3/73.9
L34	6200007750	S.COL	LQW2BHN56NJ03L	B	13.2/51.7
L35	6200006991	S.COL	ELJRE 56NGFA	B	20.1/50.7
L36	6200010420	S.COL	FHW1210HC 1R0JGT	B	39.2/66
L37	6200010050	S.COL	AS080547-47N	T	30/58.5
L38	6200010050	S.COL	AS080547-47N	T	21.6/58
L39	6200010050	S.COL	AS080547-47N	T	12.5/57.5
L40	6200010050	S.COL	AS080547-47N	T	10.5/81
L41	6200002861	S.COL	NLV25T-4R7J	T	122.3/54.4
L42	6200005011	S.COL	NLV25T-100J	T	40.7/42.1
L43	6200010680	S.COL	C2520C-R22G-A (0.22U)	T	42.1/34.9

M.=Mounted side (T: Mounted on the Top side, B: Mounted on the Bottom side)
S.=Surface mount

[MAIN-A UNIT] (MDC compatible)

REF NO.	ORDER NO.	DESCRIPTION	M.	H/V LOCATION
L44	6200010740	S.COL C2520C-R27G-A	T	37.8/35.3
L45	6200003960	S.COL MLF1608A 1R0K-T	T	71.3/72.7
L46	6200005661	S.COL ELJRE 10NGFA	T	78.3/42.3
L47	6200004480	S.COL MLF1608D R82K-T	T	23.3/20.9
L48	6200007750	S.COL LQW2BHN56NJ03L	B	23.9/39.8
R1	7030005060	S.RES ERJ2GEJ 333 X (33 k)	B	38.1/5.8
R2	7511001730	S.TMR ERTJOEP 473J	T	90.4/35.6
R3	7030005050	S.RES ERJ2GEJ 103 X (10 k)	T	79/11.9
R4	7030005700	S.RES ERJ2GEJ 274 X (270 k)	B	88.5/18.9
R5	7030005090	S.RES ERJ2GEJ 104 X (100 k)	T	90.4/34
R6	7030005160	S.RES ERJ2GEJ 105 X (1 M)	T	84/19.4
R7	7030005230	S.RES ERJ2GEJ 334 X (330 k)	T	84/17.5
R8	7410001130	S.ARY EXB28V102JX	T	86.1/52.4
R9	7030007570	S.RES ERJ2GEJ 122 X (1.2 k)	B	34.3/11.6
R10	7030007060	S.RES ERJ2GEJ 684X (680 k)	B	35.8/13.7
R11	7030010040	S.RES ERJ2GEJ-JPW	T	8.4/9.2
R12	7030004970	S.RES ERJ2GEJ 470 X (47)	T	31/17.2
R13	7030005600	S.RES ERJ2GEJ 273 X (27 k)	T	8.8/15.9
R14	7030005210	S.RES ERJ2GEJ 822 X (8.2 k)	T	7.5/7.4
R15	7030005070	S.RES ERJ2GEJ 683 X (68 k)	B	93.3/14.4
R17	7030007570	S.RES ERJ2GEJ 122 X (1.2 k)	B	93.3/15.3
R18	7030008300	S.RES ERJ2GEJ 184 X (180 k)	B	79/11.8
R19	7030005230	S.RES ERJ2GEJ 334 X (330 k)	T	89.3/9
R20	7030005090	S.RES ERJ2GEJ 104 X (100 k)	T	85.6/8.3
R21	7030005070	S.RES ERJ2GEJ 683 X (68 k)	T	86.6/8.3
R22	7030005050	S.RES ERJ2GEJ 103 X (10 k)	B	38.1/7.5
R23	7030005050	S.RES ERJ2GEJ 103 X (10 k)	B	38.1/9.2
R24	7030005060	S.RES ERJ2GEJ 333 X (33 k)	B	37.2/10.5
R25	7030005120	S.RES ERJ2GEJ 102 X (1 k)	B	100.9/51.4
R26	7030004980	S.RES ERJ2GEJ 101 X (100)	B	87.5/5.3
R27	7030007300	S.RES ERJ2GEJ 332 X (3.3 k)	T	53.9/5.6
R28	7030010040	S.RES ERJ2GEJ-JPW	T	59.4/5.6
R29	7030005530	S.RES ERJ2GEJ 100 X (10)	T	116.4/14.5
R30	7030005170	S.RES ERJ2GEJ 474 X (470 k)	B	37.2/9.2
R31	7030008410	S.RES ERJ2GEJ 392 X (3.9 k)	B	36.3/9.2
R32	7030007340	S.RES ERJ2GEJ 153 X (15 k)	B	37.2/7.5
R33	7030005160	S.RES ERJ2GEJ 105 X (1 M)	T	80.7/8.4
R34	7030005040	S.RES ERJ2GEJ 472 X (4.7 k)	T	80.7/7.2
R35	7030005120	S.RES ERJ2GEJ 102 X (1 k)	T	77.6/9.5
R36	7030005030	S.RES ERJ2GEJ 152 X (1.5 k)	B	27/14.7
R37	7030007300	S.RES ERJ2GEJ 332 X (3.3 k)	B	15.2/8.6
R38	7030005210	S.RES ERJ2GEJ 822 X (8.2 k)	T	22.9/6.2
R39	7030005600	S.RES ERJ2GEJ 273 X (27 k)	T	24/9.1
R40	7030005170	S.RES ERJ2GEJ 474 X (470 k)	T	25.9/10.6
R42	7030005090	S.RES ERJ2GEJ 104 X (100 k)	B	94.8/11.7
R43	7030007300	S.RES ERJ2GEJ 332 X (3.3 k)	B	94.8/10
R44	7030007340	S.RES ERJ2GEJ 153 X (15 k)	B	90.7/11.9
R45	7030005220	S.RES ERJ2GEJ 223 X (22 k)	B	92.8/10
R46	7030005040	S.RES ERJ2GEJ 472 X (4.7 k)	T	92.1/14.1
R47	7030005050	S.RES ERJ2GEJ 103 X (10 k)	T	92.1/13.1
R48	7030005060	S.RES ERJ2GEJ 333 X (33 k)	B	50.9/8.6
R49	7030005160	S.RES ERJ2GEJ 105 X (1 M)	B	49.7/13.7
R50	7030005090	S.RES ERJ2GEJ 104 X (100 k)	B	49.7/11
R51	7030005290	S.RES ERJ2GEJ 682 X (6.8 k)	T	52.4/7
R52	7030007340	S.RES ERJ2GEJ 153 X (15 k)	T	59.1/12.5
R53	7030005000	S.RES ERJ2GEJ 471 X (470)	T	86.2/37.7
R54	7030010040	S.RES ERJ2GEJ-JPW	B	78.7/36.4
R55	7030005290	S.RES ERJ2GEJ 682 X (6.8 k)	T	81.8/25.3
R56	7030005040	S.RES ERJ2GEJ 472 X (4.7 k)	B	77.7/48.4
R57	7030005090	S.RES ERJ2GEJ 104 X (100 k)	B	28.3/14.3
R58	7030005050	S.RES ERJ2GEJ 103 X (10 k)	T	27.6/9
R59	7030005170	S.RES ERJ2GEJ 474 X (470 k)	T	27.6/8.1
R60	7030005000	S.RES ERJ2GEJ 471 X (470)	T	30.9/10.2
R61	7030005040	S.RES ERJ2GEJ 472 X (4.7 k)	T	28.8/8.5
R63	7030005220	S.RES ERJ2GEJ 223 X (22 k)	B	92.8/8.3
R64	7030005220	S.RES ERJ2GEJ 223 X (22 k)	B	92.8/6.5
R65	7030005090	S.RES ERJ2GEJ 104 X (100 k)	B	50.9/9.5
R66	7030005050	S.RES ERJ2GEJ 103 X (10 k)	T	86.6/11.8
R67	7030005290	S.RES ERJ2GEJ 682 X (6.8 k)	T	53.4/7
R68	7030007290	S.RES ERJ2GEJ 222 X (2.2 k)	B	53.7/17.9
R69	7030010040	S.RES ERJ2GEJ-JPW	T	85.6/13.6
R71	7030005090	S.RES ERJ2GEJ 104 X (100 k)	T	57.7/6.3
R72	7030007290	S.RES ERJ2GEJ 222 X (2.2 k)	T	64.9/55.6
R73	7030005000	S.RES ERJ2GEJ 471 X (470)	B	83.2/26.9
R74	7030007300	S.RES ERJ2GEJ 332 X (3.3 k)	B	81.8/25.3
R75	7030009140	S.RES ERJ2GEJ 272 X (2.7 k)	B	79.2/34
R76	7030007340	S.RES ERJ2GEJ 153 X (15 k)	B	80.3/29.1
R77	7030005580	S.RES ERJ2GEJ 560 X (56)	T	78.2/47.2
R78	7030005070	S.RES ERJ2GEJ 683 X (68 k)	B	81.5/34
R79	7030005040	S.RES ERJ2GEJ 472 X (4.7 k)	B	74.8/50
R80	7030005040	S.RES ERJ2GEJ 472 X (4.7 k)	B	70/50.9
R81	7030005110	S.RES ERJ2GEJ 224 X (220 k)	B	55.5/31.4
R82	7030005110	S.RES ERJ2GEJ 224 X (220 k)	B	66.3/33.3
R83	7030008400	S.RES ERJ2GEJ 182 X (1.8 k)	T	32.6/10.2
R85	7030005110	S.RES ERJ2GEJ 224 X (220 k)	T	25.1/20.7
R87	7030007300	S.RES ERJ2GEJ 332 X (3.3 k)	T	32.2/20.6
R88	7030005120	S.RES ERJ2GEJ 102 X (1 k)	B	91.7/6.5
R90	7030005000	S.RES ERJ2GEJ 471 X (470)	B	89.4/18.9
R91	7030005700	S.RES ERJ2GEJ 274 X (270 k)	T	85.6/11.8
R92	7030005090	S.RES ERJ2GEJ 104 X (100 k)	T	87.3/13.4
R93	7030005310	S.RES ERJ2GEJ 124 X (120 k)	T	83.9/8.2
R94	7030005080	S.RES ERJ2GEJ 823 X (82 k)	T	108/34.7
R95	7030005720	S.RES ERJ2GEJ 563 X (56 k)	T	108/33.8
R96	7030005240	S.RES ERJ2GEJ 473 X (47 k)	B	63.7/15.5
R97	7030005060	S.RES ERJ2GEJ 333 X (33 k)	B	53.3/16.6
R98	7030005030	S.RES ERJ2GEJ 152 X (1.5 k)	B	62.1/19.4
R99	7030005240	S.RES ERJ2GEJ 473 X (47 k)	B	60.2/19.4
R100	7030005030	S.RES ERJ2GEJ 152 X (1.5 k)	B	77.9/34.4
R101	7030008280	S.RES ERJ2GEJ 271 X (270)	B	79.2/29.1
R102	7030005530	S.RES ERJ2GEJ 100 X (10)	T	23/22.9
R103	7030005600	S.RES ERJ2GEJ 273 X (27 k)	B	29.9/23.8
R104	7030007280	S.RES ERJ2GEJ 331 X (330)	T	26.9/22.6

[MAIN-A UNIT] (MDC compatible)

REF NO.	ORDER NO.	DESCRIPTION	M.	H/V LOCATION
R105	7030005600	S.RES ERJ2GEJ 273 X (27 k)	B	30.9/23.8
R106	7030007270	S.RES ERJ2GEJ 151 X (150)	T	34.3/22.5
R107	7030007340	S.RES ERJ2GEJ 153 X (15 k)	B	129.7/52.3
R108	7030005240	S.RES ERJ2GEJ 473 X (47 k)	B	82.3/18.9
R109	7030005700	S.RES ERJ2GEJ 274 X (270 k)	B	81.3/18.9
R110	7030005050	S.RES ERJ2GEJ 103 X (10 k)	T	78.4/20.2
R111	7030005050	S.RES ERJ2GEJ 103 X (10 k)	T	95.9/28.3
R112	7030005700	S.RES ERJ2GEJ 274 X (270 k)	T	80.8/20.1
R113	7030005240	S.RES ERJ2GEJ 473 X (47 k)	B	57.9/19.4
R114	7030005090	S.RES ERJ2GEJ 104 X (100 k)	B	53.7/13.3
R115	7030005090	S.RES ERJ2GEJ 104 X (100 k)	T	114.4/18.4
R116	7030005090	S.RES ERJ2GEJ 104 X (100 k)	B	85.3/7.3
R118	7030006610	S.RES ERJ2GEJ 394 X (390 k)	T	89.5/11.7
R120	7030009280	S.RES ERJ2GEJ 391 X	T	30.3/34.3
R122	7030005600	S.RES ERJ2GEJ 273 X (27 k)	T	32.3/35.2
R123	7030005600	S.RES ERJ2GEJ 273 X (27 k)	T	33.5/35.2
R125	7030007270	S.RES ERJ2GEJ 151 X (150)	T	35/34
R127	7030005050	S.RES ERJ2GEJ 103 X (10 k)	B	79.1/18.3
R128	7030008290	S.RES ERJ2GEJ 183 X (18 k)	T	112.1/45.1
R129	7030005040	S.RES ERJ2GEJ 472 X (4.7 k)	T	112.1/44.1
R130	7030005070	S.RES ERJ2GEJ 683 X (68 k)	T	104.9/43.2
R131	7030005070	S.RES ERJ2GEJ 683 X (68 k)	T	104.9/44.1
R132	7030004980	S.RES ERJ2GEJ 101 X (100)	T	114.4/17.5
R134	7030005160	S.RES ERJ2GEJ 105 X (1 M)	T	128.9/26.3
R135	7030005160	S.RES ERJ2GEJ 105 X (1 M)	T	128.9/25.3
R136	7030005160	S.RES ERJ2GEJ 105 X (1 M)	T	128.9/24.2
R139	7410001140	S.ARY EXB28V104JX	T	130.6/20.6
R140	7030011000	S.RES RR0510P-392-D (3.9 k)	T	48.1/47.2
R141	7030008340	S.RES RR0510P-182-D (1.8 k)	T	50.8/45.4
R142	7030010040	S.RES ERJ2GEJ-JPW	T	49/47.2
R143	7030011000	S.RES RR0510P-392-D (3.9 k)	T	58.7/42.2
R144	7030008340	S.RES RR0510P-182-D (1.8 k)	T	61.7/40.4
R145	7030010040	S.RES ERJ2GEJ-JPW	T	59.6/42.2
R146	7030011000	S.RES RR0510P-392-D (3.9 k)	T	71.8/45.8
R147	7030008340	S.RES RR0510P-182-D (1.8 k)	T	70/41.9
R148	7030010040	S.RES ERJ2GEJ-JPW	T	71.8/44.9
R149	7030005310	S.RES ERJ2GEJ 124 X (120 k)	T	69.1/36.3
R150	7030005240	S.RES ERJ2GEJ 473 X (47 k)	T	89.8/15.5
R151	7030005060	S.RES ERJ2GEJ 333 X (33 k)	T	91/16.1
R152	7030005090	S.RES ERJ2GEJ 104 X (100 k)	T	88.9/16.4
R153	7030007300	S.RES ERJ2GEJ 332 X (3.3 k)	T	39.9/32.2
R154	7030004970	S.RES ERJ2GEJ 470 X (47)	T	42.9/40.1
R155	7030005120	S.RES ERJ2GEJ 102 X (1 k)	T	41.7/32.4
R156	7030004970	S.RES ERJ2GEJ 470 X (47)	T	42.5/41.3
R157	7030005090	S.RES ERJ2GEJ 104 X (100 k)	B	33.7/23.6
R158	7030005240	S.RES ERJ2GEJ 473 X (47 k)	T	112.1/42.3
R159	7030005240	S.RES ERJ2GEJ 473 X (47 k)	T	112.1/40.5
R160	7030005240	S.RES ERJ2GEJ 473 X (47 k)	T	113.8/38.7
R161	7030005070	S.RES ERJ2GEJ 683 X (68 k)	T	104.9/46.8
R162	7030005240	S.RES ERJ2GEJ 473 X (47 k)	T	128.2/14.4
R163	7030005240	S.RES ERJ2GEJ 473 X (47 k)	T	128.7/16.3
R164	7030005240	S.RES ERJ2GEJ 473 X (47 k)	T	129.4/14.4
R165	7030005230	S.RES ERJ2GEJ 334 X (330 k)	T	128.7/17.8
R166	7030005230	S.RES ERJ2GEJ 334 X (330 k)	T	128.7/18.7
R167	7030005230	S.RES ERJ2GEJ 334 X (330 k)	T	129.8/16.2
R168	7030006581	S.RES ERA3YED 122V (1.2 k)	T	53.6/47.5
R169	7030007230	S.RES ERA3YED 102V (1 k)	T	63.8/42.6
R170	7030010390	S.RES ERA3YED 821V (820)	T	74.1/43.2
R171	7030005090	S.RES ERJ2GEJ 104 X (100 k)	T	56.3/46.7
R172	7030008280	S.RES ERJ2GEJ 271 X (270)	B	36.4/46.4
R173	7030007270	S.RES ERJ2GEJ 151 X (150)	B	39/31.2
R174	7030004980	S.RES ERJ2GEJ 101 X (100)	B	34.6/38.7
R175	7030004980	S.RES ERJ2GEJ 101 X (100)	B	33/38.7
R176	7030005590	S.RES ERJ2GEJ 680 X (68)	B	31.3/37.4
R177	7030005590	S.RES ERJ2GEJ 680 X (68)	B	31.3/34.9
R178	7030005240	S.RES ERJ2GEJ 473 X (47 k)	T	113.8/37.8
R179	7030008300	S.RES ERJ2GEJ 184 X (180 k)	T	117.6/34.6
R180	7030005720	S.RES ERJ2GEJ 563 X (56 k)	T	118.3/35.3
R181	7030005220	S.RES ERJ2GEJ 223 X (22 k)	T	119/36
R182	7030005120	S.RES ERJ2GEJ 102 X (1 k)	T	116.9/33.9
R183	7030005070	S.RES ERJ2GEJ 683 X (68 k)	T	103.1/46.8
R184	7030005220	S.RES ERJ2GEJ 223 X (22 k)	T	113.8/36.9
R185	7030005070	S.RES ERJ2GEJ 683 X (68 k)	B	102.3/45.6
R186	7030005160	S.RES ERJ2GEJ 105 X (1 M)	T	81.8/18.9
R187	7030005060	S.RES ERJ2GEJ 333 X (33 k)	T	80.6/17.5
R188	7030005090	S.RES ERJ2GEJ 104 X (100 k)	T	78.5/14.9
R189	7030005720	S.RES ERJ2GEJ 563 X (56 k)	T	78.5/15.8
R190	7030005080	S.RES ERJ2GEJ 823 X (82 k)	T	80.6/18.4
R191	7030004980	S.RES ERJ2GEJ 101 X (100)	T	60.5/47
R192	7030004980	S.RES ERJ2GEJ 101 X (100)	B	66.3/53.2
R193	7030005050	S.RES ERJ2GEJ 103 X (10 k)	B	66.3/45.2
R194	7030005110	S.RES ERJ2GEJ 224 X (220 k)	B	62.7/50.8
R195	7030009320	S.RES ERJ2GEJ 4R7 X (4.7)	B	55.8/50.3
R196	7030005120	S.RES ERJ2GEJ 102 X (1 k)	B	65.2/42.8
R197	7030005050	S.RES ERJ2GEJ 103 X (10 k)	B	64.7/44.5
R198	7030010090	S.RES ERJ2GEJ 180 X (18)	B	36/47.6
R199	7030008280	S.RES ERJ2GEJ 271 X (270)	B	37.3/47.6
R200	7030005050	S.RES ERJ2GEJ 103 X (10 k)	B	8.4/20.6
R201	7410001130	S.ARY EXB28V102JX	B	117/51.7
R202	7030005090	S.RES ERJ2GEJ 104 X (100 k)	B	122.5/44.8
R203	7030005120	S.RES ERJ2GEJ 102 X (1 k)	B	127.4/47.3
R204	7410000750	S.ARY EXB-V4V 104JV (100 k)	B	129.6/42.7
R205	7030008010	S.RES ERJ2GEJ 123 X (12 k)	T	127.5/40.1
R206	7030005120	S.RES ERJ2GEJ 102 X (1 k)	B	127/39.5
R207	7030005050	S.RES ERJ2GEJ 103 X (10 k)	T	120.9/37.5
R208	7030005050	S.RES ERJ2GEJ 103 X (10 k)	T	121.6/38.2
R209	7410001130	S.ARY EXB28V102JX	B	125.8/40.8
R210	7030008010	S.RES ERJ2GEJ 123 X (12 k)	T	124.2/38.4
R211	7030008010	S.RES ERJ2GEJ 123 X (12 k)	T	125.9/41.1
R212	7030005160	S.RES ERJ2GEJ 105 X (1 M)	T	122.1/41.1
R213	7030005090	S.RES ERJ2GEJ 104 X (100 k)	B	55.3/51.8
R214	7030004980	S.RES ERJ2GEJ 101 X (100)	B	56.4/54
R215	7030005050	S.RES ERJ2GEJ 103 X (10 k)	B	63.5/61.3
R216	7030005590	S.RES ERJ2GEJ 680 X (68)	B	61.9/62.3

M.=Mounted side (T: Mounted on the Top side, B: Mounted on the Bottom side)
S.=Surface mount

[MAIN-A UNIT] (MDC compatible)

REF NO.	ORDER NO.	DESCRIPTION	M.	H/V LOCATION
R218	7030010040	S.RES ERJ2GEJ-JPW	B	56.4/51.8
R219	7030005050	S.RES ERJ2GEJ 103 X (10 k)	B	46/49.8
R220	7030005040	S.RES ERJ2GEJ 472 X (4.7 k)	B	49.3/52
R221	7030005050	S.RES ERJ2GEJ 103 X (10 k)	B	44.4/49.8
R222	7030005090	S.RES ERJ2GEJ 104 X (100 k)	B	17.7/33.9
R223	7030005090	S.RES ERJ2GEJ 104 X (100 k)	B	16.2/33.9
R224	7030005050	S.RES ERJ2GEJ 103 X (10 k)	B	15.7/32.7
R225	7030005000	S.RES ERJ2GEJ 471 X (470)	B	8/19.2
R226	7030004980	S.RES ERJ2GEJ 101 X (100)	T	109.7/53.5
R227	7030005090	S.RES ERJ2GEJ 104 X (100 k)	B	107.1/49.3
R228	7410001140	S.ARY EXB28V104JX	T	103.3/49
R230	7030005050	S.RES ERJ2GEJ 103 X (10 k)	B	124.7/42.7
R232	7030005530	S.RES ERJ2GEJ 100 X (10)	T	120.4/41.1
R233	7410000750	S.ARY EXB-V4V 104JV (100 k)	T	130/34.7
R234	7410001130	S.ARY EXB28V102JX	B	129.4/34.4
R236	7030009530	S.RES ERJ2GEJ 270 X (27)	B	63.9/71.5
R237	7030005040	S.RES ERJ2GEJ 472 X (4.7 k)	B	65.3/69.7
R238	7030008010	S.RES ERJ2GEJ 123 X (12 k)	B	61.9/65.1
R240	7030005570	S.RES ERJ2GEJ 820 X (82)	B	62.4/67.4
R241	7030004980	S.RES ERJ2GEJ 101 X (100)	B	58.5/66
R242	7030004970	S.RES ERJ2GEJ 470 X (47)	T	12/33.1
R243	7030009320	S.RES ERJ2GEJ 4R7 X (4.7)	T	10/36
R244	7030004980	S.RES ERJ2GEJ 101 X (100)	B	15.1/36.3
R245	7030005530	S.RES ERJ2GEJ 100 X (10)	B	11.9/39.9
R246	7030005090	S.RES ERJ2GEJ 104 X (100 k)	B	7.5/38.6
R247	7030004990	S.RES ERJ2GEJ 221 X (220)	B	7.7/36.3
R248	7410001130	S.ARY EXB28V102JX	B	103.9/47.9
R249	7410001130	S.ARY EXB28V102JX	B	123.9/27.6
R250	7410001130	S.ARY EXB28V102JX	B	122.1/25.7
R251	7410001140	S.ARY EXB28V104JX	T	124.7/28.7
R252	7410001140	S.ARY EXB28V104JX	T	122.1/25.7
R253	7030008290	S.RES ERJ2GEJ 183 X (18 k)	T	9.5/40.5
R254	7030005050	S.RES ERJ2GEJ 103 X (10 k)	T	7.4/42.2
R255	7030005310	S.RES ERJ2GEJ 124 X (120 k)	B	6.6/38.6
R257	7030008400	S.RES ERJ2GEJ 182 X (1.8 k)	T	9/42.2
R258	7030005170	S.RES ERJ2GEJ 474 X (470 k)	T	11/44.5
R259	7030005090	S.RES ERJ2GEJ 104 X (100 k)	B	6/45.1
R260	7030005090	S.RES ERJ2GEJ 104 X (100 k)	B	6/47
R261	7410001130	S.ARY EXB28V102JX	B	99.7/43.5
R262	7410001130	S.ARY EXB28V102JX	T	100.2/37.4
R263	7410001130	S.ARY EXB28V102JX	B	97/40.7
R264	7410001140	S.ARY EXB28V104JX	T	103.8/37
R265	7030005050	S.RES ERJ2GEJ 103 X (10 k)	T	103.8/39.2
R266	7410001130	S.ARY EXB28V102JX	B	120.1/23.5
R267	7410001130	S.ARY EXB28V102JX	B	118.3/21.7
R268	7410001130	S.ARY EXB28V102JX	B	116.5/19.9
R269	7030005090	S.RES ERJ2GEJ 104 X (100 k)	T	119.4/20.8
R271	7030004980	S.RES ERJ2GEJ 101 X (100)	T	77.6/78.5
R272	7030007280	S.RES ERJ2GEJ 331 X (330)	T	61/76.5
R273	7030005050	S.RES ERJ2GEJ 103 X (10 k)		
		[EXP-02], [EUR-02] only	T	62.3/76.1
R274	7030004980	S.RES ERJ2GEJ 101 X (100)	T	56.7/69.3
R275	7030005030	S.RES ERJ2GEJ 152 X (1.5 k)	T	64.8/73.8
R276	7030005040	S.RES ERJ2GEJ 472 X (4.7 k)		
		[EXP-02], [EUR-02]	T	65.8/73.8
	7030007300	S.RES ERJ2GEJ 332 X (3.3 k)		
		[USA-02], [F5061D]	T	65.8/73.8
R277	7030005050	S.RES ERJ2GEJ 103 X (10 k)	B	4.8/45.6
R278	7030005050	S.RES ERJ2GEJ 103 X (10 k)	T	132.2/29.9
R279	7030005090	S.RES ERJ2GEJ 104 X (100 k)	T	131.3/29.9
R280	7410001130	S.ARY EXB28V102JX	B	95.2/38.9
R281	7030005090	S.RES ERJ2GEJ 104 X (100 k)	T	93.7/48.8
R282	7410000750	S.ARY EXB-V4V 104JV (100 k)	T	97.2/45.3
R283	7410001130	S.ARY EXB28V102JX	T	103.1/21.7
R284	7030005120	S.RES ERJ2GEJ 102 X (1 k)	T	111.2/25.1
R285	7410001130	S.ARY EXB28V102JX	B	107.1/19.9
R286	7410001140	S.ARY EXB28V104JX	T	121.7/22.2
R287	7030004990	S.RES ERJ2GEJ 221 X (220)		
		[EXP-02], [EUR-02]	T	55.7/72.6
	7030005580	S.RES ERJ2GEJ 560 X (56)		
		[USA-02], [F5061D]	T	55.7/72.6
R288	7030005100	S.RES ERJ2GEJ 154 X (150 k)	T	54.1/68.2
R289	7030005170	S.RES ERJ2GEJ 474 X (470 k)		
		[USA-02], [F5061D] only	B	38/63.7
R290	7520000260	S.POS PRF18BB471QB1RB		
		[USA-02], [F5061D] only	T	33.9/63
R291	7030005120	S.RES ERJ2GEJ 102 X (1 k)	T	109.2/24.5
R292	7030006070	S.RES ERJ12YJ101U (100)	B	43.6/66.1
R293	7030005120	S.RES ERJ2GEJ 102 X (1 k)	T	50.6/70.5
R294	7030005050	S.RES ERJ2GEJ 103 X (10 k)	T	51.7/68.2
R295	7030008290	S.RES ERJ2GEJ 183 X (18 k)	T	50.6/71.4
R296	7030005040	S.RES ERJ2GEJ 472 X (4.7 k)	T	53.8/64.2
R297	7030008010	S.RES ERJ2GEJ 123 X (12 k)	T	50.5/68.6
R298	7030005090	S.RES ERJ2GEJ 104 X (100 k)	T	45.6/69.9
R300	7030005050	S.RES ERJ2GEJ 103 X (10 k)	B	99.9/59.6
R301	7030007290	S.RES ERJ2GEJ 222 X (2.2 k)	T	106.2/55.6
R302	7030000480	S.RES MCR10EZHJ 6.8 k	T	79/64.4
R303	7030000480	S.RES MCR10EZHJ 6.8 k	T	80.9/64.4
R304	7030000440	S.RES MCR10EZHJ 3.3 k	T	82.8/64.4
R305	7030005050	S.RES ERJ2GEJ 103 X (10 k)	T	40.3/19.4
R306	7030005040	S.RES ERJ2GEJ 472 X (4.7 k)	T	41/21.7
R307	7030005050	S.RES ERJ2GEJ 103 X (10 k)	B	27/63
R309	7030005070	S.RES ERJ2GEJ 683 X (68 k)	T	89.9/7.2
R310	7030004980	S.RES ERJ2GEJ 101 X (100)	B	109.3/62.8
R311	7030000220	S.RES MCR10EZHJ 47 (470)	B	15/76.9
R312	7030005700	S.RES ERJ2GEJ 274 X (270 k)	B	31.5/62.4
R313	7030003370	S.RES ERJ3GEYJ 271 V (270)	B	8.6/54
R314	7030005600	S.RES ERJ2GEJ 273 X (27 k)	B	3/53
R315	7030000220	S.RES MCR10EZHJ 47 (470)	B	3.5/57.4
R316	7030005170	S.RES ERJ2GEJ 474 X (470 k)	T	90.8/11.3
R317	7030005160	S.RES ERJ2GEJ 105 X (1 M)	B	108.3/83.7
R318	7030005160	S.RES ERJ2GEJ 105 X (1 M)	B	112.5/82.7
R319	7030005120	S.RES ERJ2GEJ 102 X (1 k)	B	112.1/81.5
R320	7030005160	S.RES ERJ2GEJ 105 X (1 M)	B	107.2/82.4

[MAIN-A UNIT] (MDC compatible)

REF NO.	ORDER NO.	DESCRIPTION	M.	H/V LOCATION
R321	7030004970	S.RES ERJ2GEJ 470 X (47)	B	108.4/82
R322	7030005600	S.RES ERJ2GEJ 273 X (27 k)	B	2.1/79.2
R323	7030003370	S.RES ERJ3GEYJ 271 V (270)	B	6.3/78.7
R324	7030000620	S.RES MCR10EZHJ 100 k	B	5.6/85.5
R325	7030005050	S.RES ERJ2GEJ 103 X (10 k)	B	130.5/45.2
R326	7030005090	S.RES ERJ2GEJ 104 X (100 k)	B	131.8/51.7
R327	7030007290	S.RES ERJ2GEJ 222 X (2.2 k)	B	131.1/54.2
R328	7030005090	S.RES ERJ2GEJ 104 X (100 k)	B	134.2/51.7
R332	7030005090	S.RES ERJ2GEJ 104 X (100 k)	T	109.6/27.9
R333	7030005120	S.RES ERJ2GEJ 102 X (1 k)	T	109.6/26.9
R334	7520000270	S.POS PRG21BC4R7MM1RA	T	101.4/79.7
R335	7030005050	S.RES ERJ2GEJ 103 X (10 k)	T	101.8/83.9
R336	7030005120	S.RES ERJ2GEJ 102 X (1 k)	T	111.3/78.5
R337	7410001130	S.ARY EXB28V102JX	T	104.6/75.9
R338	7030005651	S.RES ERA3YKD 304V (300 k)	T	113.6/54.3
R339	7030005871	S.RES ERA3YKD 104V (100 k)	T	113.6/52.9
R340	7030003560	S.RES ERJ3GEYJ 103 V (10 k)	T	136.3/65.7
R341	7030003560	S.RES ERJ3GEYJ 103 V (10 k)	B	130.7/85.9
R342	7030005090	S.RES ERJ2GEJ 104 X (100 k)	B	135.4/52.2
R343	7030007290	S.RES ERJ2GEJ 222 X (2.2 k)	B	138.2/49.4
R344	7030005110	S.RES ERJ2GEJ 224 X (220 k)	B	133.3/54.6
R345	7030005110	S.RES ERJ2GEJ 224 X (220 k)	B	133.3/56.3
R346	7030008410	S.RES ERJ2GEJ 392 X (3.9 k)	B	137/52.2
R347	7030005050	S.RES ERJ2GEJ 103 X (10 k)	B	137.8/53.7
R348	7030005700	S.RES ERJ2GEJ 274 X (270 k)	B	131/75.5
R349	7030005090	S.RES ERJ2GEJ 104 X (100 k)	B	129.8/76.5
R350	7030005120	S.RES ERJ2GEJ 102 X (1 k)	B	139.1/47.8
R351	7030004980	S.RES ERJ2GEJ 101 X (100)	B	136.3/38.1
R352	7030008300	S.RES ERJ2GEJ 184 X (180 k)	B	139.7/39
R353	7030005230	S.RES ERJ2GEJ 334 X (330 k)	B	138.2/47.8
R354	7030010040	S.RES ERJ2GEJ-JPW	T	140.4/36
R355	7030008280	S.RES ERJ2GEJ 271 X (270)	B	139.7/34.3
R356	7540000290	ABS ERZV10D220		
R359	7030005090	S.RES ERJ2GEJ 104 X (100 k)	B	114.8/82.9
R360	7030005090	S.RES ERJ2GEJ 104 X (100 k)	T	80.6/5.3
R361	7030005600	S.RES ERJ2GEJ 273 X (27 k)	T	78.4/5.3
R362	7030005050	S.RES ERJ2GEJ 103 X (10 k)	T	124.8/50.2
R363	7030005120	S.RES ERJ2GEJ 102 X (1 k)	T	42.9/38.3
R364	7030009140	S.RES ERJ2GEJ 272 X (2.7 k)	T	42.9/37.4
R365	7030004970	S.RES ERJ2GEJ 470 X (47)	T	38.3/37.9
R366	7030005050	S.RES ERJ2GEJ 103 X (10 k)	B	131.4/63.4
R367	7030005000	S.RES ERJ2GEJ 471 X (470)	B	130.1/63
R368	7030005050	S.RES ERJ2GEJ 103 X (10 k)	T	78.3/7.6
R370	7030005010	S.RES ERJ2GEJ 681 X (680)	T	71.2/70.4
R371	7030005050	S.RES ERJ2GEJ 103 X (10 k)	T	119.5/84.6
R372	7030005040	S.RES ERJ2GEJ 472 X (4.7 k)	T	25.9/8.1
R373	7030005040	S.RES ERJ2GEJ 472 X (4.7 k)	T	74/21.6
R375	7030005030	S.RES ERJ2GEJ 152 X (1.5 k)	T	27.6/5.3
R376	7030005160	S.RES ERJ2GEJ 105 X (1 M)	B	109.1/12.1
R377	7030005160	S.RES ERJ2GEJ 105 X (1 M)	B	110.9/12.1
R378	7410001140	S.ARY EXB28V104JX	B	100.7/18.3
R379	7030005090	S.RES ERJ2GEJ 104 X (100 k)	T	111.6/23.8
R386	7030005120	S.RES ERJ2GEJ 102 X (1 k)	T	105.8/85.1
R387	7030005120	S.RES ERJ2GEJ 102 X (1 k)	T	107.8/85.1
R389	7030005090	S.RES ERJ2GEJ 104 X (100 k)	T	110.4/10.7
R390	7030008300	S.RES ERJ2GEJ 184 X (180 k)	B	23/10.5
R391	7030005120	S.RES ERJ2GEJ 102 X (1 k)	B	23.9/7.3
R392	7030008400	S.RES ERJ2GEJ 182 X (1.8 k)	B	29.2/5.6
R393	7030004980	S.RES ERJ2GEJ 101 X (100)	B	28.3/7.3
R394	7030004980	S.RES ERJ2GEJ 101 X (100)	B	23/8.9
R395	7030005290	S.RES ERJ2GEJ 682 X (6.8 k)	B	22.1/7.3
R396	7030009290	S.RES ERJ2GEJ 562 X (5.6 k)	B	22.1/5.6
R397	7030005120	S.RES ERJ2GEJ 102 X (1 k)	B	79.8/46.1
R398	7030005120	S.RES ERJ2GEJ 102 X (1 k)	T	79.3/41.3
R399	7030005050	S.RES ERJ2GEJ 103 X (10 k)	B	95.8/10
R400	7030005030	S.RES ERJ2GEJ 152 X (1.5 k)	B	23/5.6
C1	4030017420	S.CER ECJ0EC1H470J	T	88.9/54.3
C2	4030017420	S.CER ECJ0EC1H470J	T	89.9/54.3
C3	4030017420	S.CER ECJ0EC1H470J	T	41.5/15.4
C4	4030017420	S.CER ECJ0EC1H470J	B	50/15
C5	4030017460	S.CER ECJ0EB1E102K	T	89.4/34
C6	4550007080	S.TAN TEESVA 1C 106M8R	T	80.8/55.1
C7	4030017420	S.CER ECJ0EC1H470J	T	84/18.4
C8	4030017420	S.CER ECJ0EC1H470J	T	89.9/52
C9	4030016930	S.CER ECJ0EB1A104K	T	88.9/52
C10	4030016930	S.CER ECJ0EB1A104K	T	80.6/50.7
C11	4030016930	S.CER ECJ0EB1A104K	T	10.9/18.8
C12	4030016930	S.CER ECJ0EB1A104K	T	8.5/7.4
C13	4030016930	S.CER ECJ0EB1A104K	T	85.6/10
C14	4030016930	S.CER ECJ0EB1A104K	T	86.6/10
C15	4030017460	S.CER ECJ0EB1E102K	T	41.5/7.7
C16	4550000460	S.TAN TEESVA 1C 105M8R	T	42.7/6.2
C17	4550000460	S.TAN TEESVA 1C 105M8R	B	42.7/6.2
C18	4030017420	S.CER ECJ0EC1H470J	T	41.5/14.5
C19	4030017420	S.CER ECJ0EC1H470J	B	50/15.9
C20	4030016970	S.CER ECJ0EB1C223K	B	100.9/52.3
C21	4030017420	S.CER ECJ0EC1H470J	T	41.5/13.5
C22	4030017420	S.CER ECJ0EC1H470J	T	41.5/12.6
C23	4030016930	S.CER ECJ0EB1A104K	T	51.8/5.6
C24	4030017660	S.CER ECJ0EC1H330J	B	39.8/9.8
C25	4030017420	S.CER ECJ0EC1H470J	T	61.4/6
C26	4030016930	S.CER ECJ0EB1A104K	B	37.2/5.8
C27	4030018240	S.CER ECJ0EB1E562K	B	36.3/7.5
C28	4030016790	S.CER ECJ0EB1C103K	T	79.3/7.6
C29	4030017460	S.CER ECJ0EB1E102K	T	79/13.6
C30	4030016930	S.CER ECJ0EB1A104K	T	78.1/13.6
C31	4030017460	S.CER ECJ0EB1E102K	T	80.6/51.7
C32	4030017500	S.CER ECJ0EC1H560J	B	33.3/15.9
C33	4030016930	S.CER ECJ0EB1A104K	B	34.8/12.8
C34	4030017570	S.CER ECJ0EC1H040B	B	32.1/15.4
C35	4030017590	S.CER ECJ0EC1H070C	B	30.9/15.9
C36	4030016930	S.CER ECJ0EB1A104K	T	22.4/14.9

M.=Mounted side (T: Mounted on the Top side, B: Mounted on the Bottom side)
S.=Surface mount

[MAIN-A UNIT] (MDC compatible)

REF NO.	ORDER NO.	DESCRIPTION	M.	H/V LOCATION
C37	4030017360	S.CER ECJ0EC1H030B	B	28.3/15.4
C38	4030016930	S.CER ECJ0EB1A104K	T	22/6.2
C39	4030016930	S.CER ECJ0EB1A104K	B	13.6/6.2
C40	4030016930	S.CER ECJ0EB1A104K	T	23.8/6.2
C41	4030016930	S.CER ECJ0EB1A104K	T	22/12.5
C42	4030016930	S.CER ECJ0EB1A104K	T	23/12.5
C43	4030017680	S.CER 82P ECJ10 CH	T	26.4/9.4
C44	4030017680	S.CER 82P ECJ10 CH	T	25.5/9.4
C45	4030017790	S.CER ECJ0EB1E682K	B	91.7/10
C46	4030016930	S.CER ECJ0EB1A104K	B	93.8/10
C47	4030016970	S.CER ECJ0EB1C223K	T	92.1/15.1
C48	4030017710	S.CER ECJ0EC1H181J	B	49.7/9.1
C49	4550007080	S.TAN TEESVA 1C 106M8R	T	52.1/15.4
C50	4030017460	S.CER ECJ0EB1E102K	T	54.3/12
C51	4030017400	S.CER ECJ0EC1H220J	T	47.8/19
C52	4030017400	S.CER ECJ0EC1H220J	T	44.7/7.8
C53	4030017900	S.CER ECJ0EB1C123K	T	59.1/10.6
C54	4030018080	S.CER ECJ0EB1H182K	T	59.1/11.5
C55	4030016790	S.CER ECJ0EB1C103K	T	64.5/57
C56	4030017620	S.CER ECJ0EC1H100C	T	87.7/35.5
C57	4030016930	S.CER ECJ0EB1A104K	T	80.1/36.7
C58	4030017430	S.CER ECJ0EC1H101J	T	85.2/38.6
C59	4030017460	S.CER ECJ0EB1E102K	T	81.8/24.3
C60	4030017420	S.CER ECJ0EC1H470J	T	82.9/41.5
C63	4030017620	S.CER ECJ0EC1H100C	T	84/39.1
C64	4030017780	S.CER ECJ0EB1E472K	T	81.3/41.3
C65	4030017460	S.CER ECJ0EB1E102K	T	27.6/10.6
C66	4550006050	S.TAN TEESVA 0J 106M8R	T	31.1/6.8
C67	4030017460	S.CER ECJ0EB1E102K	T	27.6/7.1
C68	4030017460	S.CER ECJ0EB1E102K	T	30.5/9
C69	4030017460	S.CER ECJ0EB1E102K	T	32.6/15.4
C70	4030017420	S.CER ECJ0EC1H470J	B	28.3/13.4
C71	4030016940	S.CER ECJ0EB1A393K	B	91.7/8.3
C72	4030018860	S.CER ECJ0EB0J105K	B	50.7/11
C73	4030017750	S.CER ECJ0EB1E122K	B	51.3/16.6
C74	4030016930	S.CER ECJ0EB1A104K	B	52.3/16.6
C75	4030016930	S.CER ECJ0EB1A104K	B	56.2/12.6
C77	4030017460	S.CER ECJ0EB1E102K	B	54.2/16.6
C78	4030017460	S.CER ECJ0EB1E102K	B	53.7/9
C79	4550007080	S.TAN TEESVA 1C 106M8R	T	66.5/55.3
C80	4030017780	S.CER ECJ0EB1E472K	B	79.2/35
C81	4550000460	S.TAN TEESVA 1C 105M8R	B	82.2/36.4
C82	4030017460	S.CER ECJ0EB1E102K	B	84.1/26.9
C83	4550000460	S.TAN TEESVA 1C 105M8R	B	84/32.5
C84	4030017460	S.CER ECJ0EB1E102K	T	78.2/48.8
C85	4030017380	S.CER ECJ0EC1H050B	B	77.1/47.2
C86	4030017350	S.CER ECJ0EC1H020B	B	74.8/48.3
C87	4030017580	S.CER ECJ0EC1H060C	B	73.7/48.3
C88	4030017380	S.CER ECJ0EC1H050B	B	72.4/48.6
C89	4030017580	S.CER ECJ0EC1H060C	B	71.1/49.1
C90	4030017350	S.CER ECJ0EC1H020B	B	70/49.1
C91	4030016790	S.CER ECJ0EB1C103K	T	27.3/17.3
C92	4030017460	S.CER ECJ0EB1E102K	T	25.1/22.4
C93	4030017680	S.CER ECJ0EC1H820J	T	32.6/12.6
C94	4030017460	S.CER ECJ0EB1E102K	B	27.8/12.5
C95	4030016790	S.CER ECJ0EB1C103K	T	28.9/20.1
C98	4030016930	S.CER ECJ0EB1A104K	B	89.3/7.3
C99	4030016930	S.CER ECJ0EB1A104K	B	90.7/14.8
C100	4030016930	S.CER ECJ0EB1A104K	T	87.3/14.3
C101	4030017710	S.CER ECJ0EC1H181J	T	83.9/7.2
C102	4030016930	S.CER ECJ0EB1A104K	T	108/32.8
C103	4030016930	S.CER ECJ0EB1A104K	B	55.3/19.3
C104	4550003250	S.TAN TEESVA 1V 474M8R	B	67.2/24.2
C105	4030017420	S.CER ECJ0EC1H470J	T	49.2/29.4
C106	4030017460	S.CER ECJ0EB1E102K	B	78/29.1
C107	4030016930	S.CER ECJ0EB1A104K	B	54.2/28.8
C109	4550006480	S.TAN TEESVA 1C 475M8R	B	56.1/27.7
C110	4030017420	S.CER ECJ0EC1H470J	T	60.1/27
C111	4030016930	S.CER ECJ0EB1A104K	B	66.3/30.3
C112	4030017460	S.CER ECJ0EB1E102K	B	67.4/30.3
C113	4030017420	S.CER ECJ0EC1H470J	T	72.1/26.6
C114	4030016790	S.CER ECJ0EB1C103K	T	24.2/22.3
C115	4030016790	S.CER ECJ0EB1C103K	T	21.4/22
C116	4030016790	S.CER ECJ0EB1C103K	T	28.5/22.6
C118	4030017640	S.CER ECJ0EC1H150J	T	20.5/28.7
C120	4030016790	S.CER ECJ0EB1C103K	T	32.6/22.5
C122	4030017660	S.CER ECJ0EC1H330J	T	39.8/28.9
C124	4030016930	S.CER ECJ0EB1A104K	B	90.3/18.9
C125	4030017460	S.CER ECJ0EB1E102K	B	128.5/52.6
C126	4030016930	S.CER ECJ0EB1A104K	T	79.6/20.6
C127	4030016930	S.CER ECJ0EB1A104K	B	82.8/20.1
C128	4030016930	S.CER ECJ0EB1A104K	T	78.4/19.3
C129	4030016930	S.CER ECJ0EB1A104K	B	63.7/16.4
C130	4030016930	S.CER ECJ0EB1A104K	B	135.6/25.4
C131	4030017660	S.CER ECJ0EC1H330J	T	135.9/25.7
C132	4030017660	S.CER ECJ0EC1H330J	T	135.9/18
C133	4030018010	S.CER ECJ0EC1H360J	T	48.1/35.5
C134	4030017640	S.CER ECJ0EC1H150J	T	49.4/34.8
C135	4030017660	S.CER ECJ0EC1H330J	T	64.1/32.5
C136	4030017340	S.CER ECJ0EC1H010B	T	71.1/30.8
C137	4030017570	S.CER ECJ0EC1H040B	T	71.1/29.9
C138	4030017730	S.CER ECJ0EB1E471K	T	71.9/33
C139	4030017390	S.CER ECJ0EC1H180J	T	62.1/32
C140	4030017360	S.CER ECJ0EC1H030B	T	72.5/30.7
C141	4030017360	S.CER ECJ0EC1H030B	T	72.1/29
C142	4030018860	S.CER ECJ0EB0J105K	T	89.5/12.7
C143	4030017400	S.CER ECJ0EC1H220J	T	71.3/36.6
C145	4030016790	S.CER ECJ0EB1C103K	T	31.4/35.2
C146	4030017610	S.CER ECJ0EC1H090C	T	35/33.1
C147	4030016790	S.CER ECJ0EB1C103K	T	34.5/35.2
C148	4030016790	S.CER ECJ0EB1C103K	T	30.9/26.4
C149	4030016930	S.CER ECJ0EB1A104K	B	78.2/17.4
C150	4030018560	S.CER C2012 JB 1A 475K-T	B	86.9/19.8
C151	4030016930	S.CER ECJ0EB1A104K	T	112.1/46

[MAIN-A UNIT] (MDC compatible)

REF NO.	ORDER NO.	DESCRIPTION	M.	H/V LOCATION
C152	4030016930	S.CER ECJ0EB1A104K	T	109.6/34.3
C153	4030017460	S.CER ECJ0EB1E102K	T	111.4/34.3
C154	4030018860	S.CER ECJ0EB0J105K	T	82.7/19.8
C155	4030017420	S.CER ECJ0EC1H470J	T	110.3/38.7
C156	4030017910	S.CER ECJ0EB1H152K	T	104.9/42.3
C157	4030017420	S.CER ECJ0EC1H470J	T	110.8/48.6
C158	4030017430	S.CER ECJ0EC1H101J	T	110.3/37.8
C159	4030017460	S.CER ECJ0EB1E102K	T	120.3/5.5
C160	4030017460	S.CER ECJ0EB1E102K	B	130.6/25.4
C161	4030018010	S.CER ECJ0EC1H360J	T	50.8/43.8
C162	4030017590	S.CER ECJ0EC1H070C	T	52.1/43.4
C163	4030017660	S.CER ECJ0EC1H330J	T	58.7/39.4
C164	4030017660	S.CER ECJ0EC1H330J	T	48.6/45.8
C165	4030017660	S.CER ECJ0EC1H330J	T	49.9/45.4
C166	4030017580	S.CER ECJ0EC1H060C	T	60.1/38.9
C167	4030017420	S.CER ECJ0EC1H470J	T	70/38.9
C168	4030017660	S.CER ECJ0EC1H330J	T	59.1/40.8
C169	4030017660	S.CER ECJ0EC1H330J	T	60.7/40.4
C170	4030017550	S.CER ECJ0EC1H1R5B	T	70.4/36.6
C171	4030017570	S.CER ECJ0EC1H040B	T	70/37.9
C172	4030017400	S.CER ECJ0EC1H220J	T	70/42.9
C173	4030017400	S.CER ECJ0EC1H220J	T	70/43.9
C174	4030017640	S.CER ECJ0EC1H150J	T	38.3/38.8
C175	4030016790	S.CER ECJ0EB1C103K	B	41.4/39.4
C176	4030016930	S.CER ECJ0EB1A104K	B	41/33.2
C177	4030017730	S.CER ECJ0EB1E471K	B	41/32.2
C178	4030016790	S.CER ECJ0EB1C103K	B	34.5/33
C180	4030017740	S.CER ECJ0EB1E821K	T	109.2/48.6
C181	4030016930	S.CER ECJ0EB1A104K	T	112.1/43.2
C182	4030016780	S.CER ECJ0EB1C153K	T	112.1/39.6
C183	4030017420	S.CER ECJ0EC1H470J	T	104.9/45
C184	4030017760	S.CER ECJ0EB1H222K	T	104.9/45.9
C185	4030017690	S.CER ECJ0EC1H121J	T	107.8/48.6
C186	4030016790	S.CER ECJ0EB1C103K	T	51.7/45.4
C187	4030017460	S.CER ECJ0EB1E102K	T	52.6/45.4
C188	4030016790	S.CER ECJ0EB1C103K	T	62.7/40.4
C189	4030017460	S.CER ECJ0EB1E102K	T	63.7/40.4
C190	4030017540	S.CER ECJ0EC1HR75B	T	55/48.3
C191	4030016790	S.CER ECJ0EB1C103K	T	70/40.9
C192	4030017540	S.CER ECJ0EC1HR75B	T	57.7/43
C193	4030017460	S.CER ECJ0EB1E102K	T	70/39.9
C194	4030017530	S.CER ECJ0EC1H0R5B	T	60/44.4
C195	4030016930	S.CER ECJ0EB1A104K	B	39/30
C196	4030017730	S.CER ECJ0EB1E471K	B	38.1/33.2
C197	4030016930	S.CER ECJ0EB1A104K	B	38.1/32.2
C198	4030017730	S.CER ECJ0EB1E471K	B	31.3/38.3
C199	4030016930	S.CER ECJ0EB1A104K	B	31.3/39.2
C200	4030016930	S.CER ECJ0EB1A104K	B	31.3/34
C201	4030017730	S.CER ECJ0EB1E471K	B	31.3/33.1
C202	4030017460	S.CER ECJ0EB1E102K	T	112.1/38.7
C203	4030017460	S.CER ECJ0EB1E102K	B	100.9/47
C205	4030018900	S.CER ECJ0EB0J474K	T	78.4/18.4
C206	4030016930	S.CER ECJ0EB1A104K	T	78.5/16.7
C207	4030017730	S.CER ECJ0EB1E471K	T	61/45.7
C208	4030017460	S.CER ECJ0EB1E102K	T	60/45.7
C209	4030017460	S.CER ECJ0EB1E102K	B	65/52.7
C210	4030017590	S.CER ECJ0EC1H070C	B	57.6/50.3
C211	4030017620	S.CER ECJ0EC1H100C	B	60/51.4
C212	4030017460	S.CER ECJ0EB1E102K	B	63.8/50.8
C214	4030017460	S.CER ECJ0EB1E102K	B	66.8/41.3
C215	4030017390	S.CER ECJ0EC1H180J	B	38.5/47.6
C216	4030017660	S.CER ECJ0EC1H330J	B	43.1/47.6
C217	4030017730	S.CER ECJ0EB1E471K	B	25/32.7
C218	4030016930	S.CER ECJ0EB1A104K	B	25/31.7
C219	4030017650	S.CER ECJ0EC1H270J	B	23/36.3
C220	4030017600	S.CER ECJ0EC1H080C	B	23/38
C221	4030016930	S.CER ECJ0EB1A104K	B	5.6/23.2
C222	4030017030	S.CER ECJ0EB1A273K	B	128.6/45.3
C223	4030016930	S.CER ECJ0EB1A104K	B	126.3/48.2
C224	4030017640	S.CER ECJ0EC1H150J	T	124.2/40.1
C225	4030016790	S.CER ECJ0EB1C103K	T	124.2/37.4
C226	4030017580	S.CER ECJ0EC1H060C	T	124.2/41.1
C227	4030017460	S.CER ECJ0EB1E102K	B	57.6/53.5
C228	4030017460	S.CER ECJ0EB1E102K	B	56.4/53.1
C229	4030017620	S.CER ECJ0EC1H100C	B	52.1/53.1
C230	4030017460	S.CER ECJ0EB1E102K	B	63.5/62.3
C231	4030017360	S.CER ECJ0EC1H030B	B	66.3/52.2
C232	4030017460	S.CER ECJ0EB1E102K	B	68.6/49.5
C235	4030017460	S.CER ECJ0EB1E102K	B	44.4/50.7
C236	4030017390	S.CER ECJ0EC1H180J	B	47.8/48.1
C237	4030017620	S.CER ECJ0EC1H100C	B	47.4/49.4
C240	4030017460	S.CER ECJ0EB1E102K	B	18.9/34.4
C241	4030017360	S.CER ECJ0EC1H030B	B	17/37.7
C242	4030017460	S.CER ECJ0EB1E102K	B	15/34.4
C243	4030017460	S.CER ECJ0EB1E102K	B	18.9/33.5
C244	4030017460	S.CER ECJ0EB1E102K	B	15.7/31.7
C245	4550006780	S.TAN TEESVB2 0J 476M8R	B	5.6/18.7
C246	4030016930	S.CER ECJ0EB1A104K	B	105.1/52.2
C247	4030016930	S.CER ECJ0EB1A104K	B	107/52.9
C248	4030016930	S.CER ECJ0EB1A104K	B	108.1/52
C249	4030018900	S.CER ECJ0EB0J474K	B	121.8/47.4
C250	4030017630	S.CER ECJ0EC1H120J	T	120.4/40.1
C251	4030017400	S.CER ECJ0EC1H220J	B	61.9/64.2
C252	4030017420	S.CER ECJ0EC1H470J	B	62.6/71.1
C253	4030017730	S.CER ECJ0EB1E471K	B	61.6/71.1
C254	4030017420	S.CER ECJ0EC1H470J	B	63.9/69.5
C256	4030017460	S.CER ECJ0EB1E102K	B	59.7/65.5
C257	4030017460	S.CER ECJ0EB1E102K	B	63.4/67.4
C258	4030017460	S.CER ECJ0EB1E102K	T	13.9/32.5
C259	4030017460	S.CER ECJ0EB1E102K	T	10/35
C260	4030017590	S.CER ECJ0EC1H070C	B	14.2/36.3
C261	4030017460	S.CER ECJ0EB1E102K	B	9.5/33.9
C262	4030017460	S.CER ECJ0EB1E102K	B	13.7/37.7
C263	4030017490	S.CER C1608 JB 1A 105K-T	T	14.1/33.7

M.=Mounted side (T: Mounted on the Top side, B: Mounted on the Bottom side)
S.=Surface mount

[MAIN-A UNIT] (MDC compatible)

REF NO.	ORDER NO.	DESCRIPTION	M.	H/V LOCATION
C264	4030017350	S.CER ECJ0EC1H020B	B	8.4/38.6
C265	4030017420	S.CER ECJ0EC1H470J	B	8.6/36.3
C266	4030017460	S.CER ECJ0EB1E102K	B	9.5/36.3
C267	4030017460	S.CER ECJ0EB1E102K	B	63.9/70.5
C268	4030017640	S.CER ECJ0EC1H150J	B	68.2/69.1
C269	4030017390	S.CER ECJ0EC1H180J [USA-02], [F5061D]	B	69.7/69.1
	4030017650	S.CER ECJ0EC1H270J [EXP-02], [EUR-02]	B	69.7/69.1
C270	4030017390	S.CER ECJ0EC1H180J	B	71.2/69
C271	4030017390	S.CER ECJ0EC1H180J [EXP-02], [EUR-02]	T	74.3/71.7
	4030017400	S.CER ECJ0EC1H220J [USA-02], [F5061D]	T	74.3/71.7
C272	4030016930	S.CER ECJ0EB1A104K	T	7.9/39.5
C273	4030016930	S.CER ECJ0EB1A104K	T	9.5/39.5
C274	4030017460	S.CER ECJ0EB1E102K	T	7.4/41.2
C275	4030016930	S.CER ECJ0EB1A104K	T	15/41
C276	4030017620	S.CER ECJ0EC1H100C	B	10.5/41
C277	4030017460	S.CER ECJ0EB1E102K	T	14/41
C278	4030017340	S.CER ECJ0EC1H010B	B	8.9/43.6
C279	4030017640	S.CER ECJ0EC1H150J	B	6.9/44.2
C280	4030017550	S.CER ECJ0EC1H1R5B	B	9.4/46.1
C281	4030017420	S.CER ECJ0EC1H470J	T	97.9/34.2
C282	4030017420	S.CER ECJ0EC1H470J	T	102.1/40
C283	4030017420	S.CER ECJ0EC1H470J	B	97.4/44.6
C284	4030017420	S.CER ECJ0EC1H470J	T	94.8/35.5
C285	4030017420	S.CER ECJ0EC1H470J	B	94.2/44.4
C286	4030017420	S.CER ECJ0EC1H470J	T	92.1/43.3
C287	4030017420	S.CER ECJ0EC1H470J	T	92.1/41.6
C288	4030017460	S.CER ECJ0EB1E102K	B	4.8/46.5
C290	4030017400	S.CER ECJ0EC1H220J	T	74.3/73.6
C291	4030017730	S.CER ECJ0EB1E471K	T	69.3/76.1
C292	4550000560	S.TAN TEESVA 1V 334M8R	T	67.6/74.4
C294	4030017420	S.CER ECJ0EC1H470J	T	70.4/76.1
C295	4030017420	S.CER ECJ0EC1H470J	T	56.7/67.3
C296	4510008530	S.ELE EEE1HA2R2SR	T	59.6/80
C297	4030017460	S.CER ECJ0EB1E102K	T	56.7/68.3
C299	4030017640	S.CER ECJ0EC1H150J	B	6.9/47.9
C301	4030017580	S.CER ECJ0EC1H060C	B	13.2/49.5
C302	4030017460	S.CER ECJ0EB1E102K	B	4.4/44.4
C303	4030016930	S.CER ECJ0EB1A104K	B	129.6/32
C304	4030017420	S.CER ECJ0EC1H470J	B	90/43.4
C305	4030011140	S.CER GRM31M2C2H120JV01L	T	27.6/78.7
C306	4030011120	S.CER GRM31M2C2H100JV01L	T	27.6/76.1
C307	4030011120	S.CER GRM31M2C2H100JV01L	T	27.7/71.8
C308	4030011070	S.CER GRM31M2C2H5R0CY21L [USA-02], [F5061D]	T	27.7/69.2
	4030011140	S.CER GRM31M2C2H120JV01L [EXP-02], [EUR-02]	T	27.7/69.2
C309	4030017460	S.CER ECJ0EB1E102K	T	71.5/76.1
C310	4030017420	S.CER ECJ0EC1H470J	T	43/76.1
C311	4030017460	S.CER ECJ0EB1E102K	T	44.1/76.1
C312	4030017730	S.CER ECJ0EB1E471K	T	45.3/76.1
C313	4510008680	S.ELE EEE1EA220SP	T	51.7/77.7
C314	4030017730	S.CER ECJ0EB1E471K	B	40.2/68.3
C315	4030017460	S.CER ECJ0EB1E102K	T	55.7/73.6
C316	4030016790	S.CER ECJ0EB1C103K	T	54.1/72.6
C317	4030011600	S.CER C1608 JB 1E 104K-T	T	54.1/67
C318	4030017460	S.CER ECJ0EB1E102K [USA-02], [F5061D] only	T	35.1/63.3
C319	4030017460	S.CER ECJ0EB1E102K [USA-02], [F5061D] only	T	47.3/67.4
C320	4030017580	S.CER ECJ0EC1H060C	B	15/52.7
C321	4030017460	S.CER ECJ0EB1E102K	B	14.9/49.5
C322	4030017600	S.CER ECJ0EC1H080C	B	19.3/52
C323	4030017570	S.CER ECJ0EC1H040B	B	20/49.6
C324	4030017420	S.CER ECJ0EC1H470J	B	90/41.8
C325	4030017460	S.CER ECJ0EB1E102K	T	72.5/64.9
C326	4030017420	S.CER ECJ0EC1H470J	B	46.2/64.3
C327	4030017460	S.CER ECJ0EB1E102K	B	84.2/79
C328	4030017460	S.CER ECJ0EB1E102K	B	83.2/79
C329	4030017460	S.CER ECJ0EB1E102K	B	82.1/79
C330	4030017460	S.CER ECJ0EB1E102K	B	81/79
C331	4030017460	S.CER ECJ0EB1E102K	B	80/79
C332	4030016930	S.CER ECJ0EB1A104K	T	51.9/71.9
C334	4030017460	S.CER ECJ0EB1E102K	T	49.5/68.6
C335	4030017460	S.CER ECJ0EB1E102K	T	53.8/63.2
C336	4030017580	S.CER ECJ0EC1H060C	B	20.8/52
C337	4030017390	S.CER ECJ0EC1H180J	B	25.1/51.2
C338	4510008600	S.ELE EEE1CA4R7NR	T	79.1/69.1
C339	4030017460	S.CER ECJ0EB1E102K	T	79.1/62.1
C340	4030017460	S.CER ECJ0EB1E102K	T	37.5/20.8
C341	4030016790	S.CER ECJ0EB1C103K	T	41.9/19.4
C342	4030017200	S.CER GRM31BR32J102KY01L	T	25.3/62.5
C343	4030011270	S.CER GRM31M2C2H200JV01L	T	22.1/63.9
C345	4030011170	S.CER GRM31M2C2H180JV01L	T	17.3/57.4
C346	4030011170	S.CER GRM31M2C2H180JV01L	T	30.2/62.8
C347	4030017520	S.CER ECJ0EC1H0R3B	B	25.4/63
C348	4030017460	S.CER ECJ0EB1E102K	B	31.5/63.4
C349	4030016930	S.CER ECJ0EB1A104K	T	100.5/63.5
C350	4550005980	S.TAN TEESVA 1A 475M8R	T	101.6/62
C351	4030016930	S.CER ECJ0EB1A104K	T	110.6/67.4
C352	4030017460	S.CER ECJ0EB1E102K	B	124.6/59.6
C353	4550005980	S.TAN TEESVA 1A 475M8R	B	124.5/61.3
C354	4550006250	S.TAN TEESVA 1A 106M8R	B	112.9/61.7
C355	4030017420	S.CER ECJ0EC1H470J	B	112.6/60.1
C356	4030011270	S.CER GRM31M2C2H200JV01L	T	14.7/62.9
C357	4030011270	S.CER GRM31M2C2H200JV01L	T	10.4/62.9
C358	4030007030	S.CER C1608 CH 1H 150J-T	B	10.6/56.4
C359	4030011340	S.CER C1608 CH 1H 471J-T	B	9.4/56.4
C360	4030017460	S.CER ECJ0EB1E102K	B	4/53
C361	4030017460	S.CER ECJ0EB1E102K	T	103.9/53.5
C362	4030017460	S.CER ECJ0EB1E102K	T	108.2/24.5

[MAIN-A UNIT] (MDC compatible)

REF NO.	ORDER NO.	DESCRIPTION	M.	H/V LOCATION
C363	4510008540	S.ELE EEE1CA100SR	T	139.1/31.9
C365	4550007650	S.TAN F931V105MAABMA	B	106.7/65
C366	4550007650	S.TAN F931V105MAABMA	B	104.2/65
C367	4550007650	S.TAN F931V105MAABMA	B	101.6/65
C368	4550007650	S.TAN F931V105MAABMA	B	99.5/64.6
C369	4030011270	S.CER GRM31M2C2H200JV01L	T	15.8/78.9
C370	4030011270	S.CER GRM31M2C2H200JV01L	T	15.8/83.1
C371	4030017460	S.CER ECJ0EB1E102K	B	4.1/81.6
C372	4030006850	S.CER C1608 JB 1H 471K-T	B	8.3/77.1
C373	4030016930	S.CER ECJ0EB1A104K	B	130.9/51.7
C374	4030016930	S.CER ECJ0EB1A104K	B	133/51.3
C375	4030016930	S.CER ECJ0EB1A104K	B	132.4/54.6
C377	4030017460	S.CER ECJ0EB1E102K	T	105.9/51.9
C378	4030017460	S.CER ECJ0EB1E102K	T	108.2/78
C379	4030016930	S.CER ECJ0EB1A104K	B	108.4/80.3
C380	4030017460	S.CER ECJ0EB1E102K	T	119.9/83.2
C381	4030016790	S.CER ECJ0EB1C103K	B	135.9/70.5
C383	4030017460	S.CER ECJ0EB1E102K	B	135.9/71.5
C384	4510008870	S.ELE EEE1AA471UP	T	129.9/64.9
C386	4030016930	S.CER ECJ0EB1A104K	B	138.8/53.7
C387	4030017720	S.CER ECJ0EB1H331K	B	135.4/51.3
C388	4030018860	S.CER ECJ0EB0J105K	B	138.6/52.2
C389	4030016930	S.CER ECJ0EB1A104K	B	139.1/49.4
C390	4030016930	S.CER ECJ0EB1A104K	B	137.8/55.4
C391	4030016930	S.CER ECJ0EB1A104K	T	101.8/82.3
C392	4030017460	S.CER ECJ0EB1E102K	B	131/74.6
C393	4030017460	S.CER ECJ0EB1E102K	B	99/79
C394	4030017420	S.CER ECJ0EC1H470J	B	115.4/68
C395	4030017460	S.CER ECJ0EB1E102K	B	128.2/76.5
C397	4030017460	S.CER ECJ0EB1E102K	B	99.8/86.3
C398	4030017420	S.CER ECJ0EC1H470J	B	100.8/86.3
C399	4030018860	S.CER ECJ0EB0J105K	B	136.3/37.1
C400	4030016930	S.CER ECJ0EB1A104K	B	139.7/35.3
C411	4510008780	S.ELE EEE1EA471P	T	117.2/63.6
C412	4510008780	S.ELE EEE1EA471P	T	132.7/54.3
C413	4030018900	S.CER ECJ0EB0J474K	B	135.1/46.8
C414	4510008540	S.ELE EEE1CA100SR	T	118.7/50.5
C415	4030016930	S.CER ECJ0EB1A104K	B	103/23.8
C416	4030016930	S.CER ECJ0EB1A104K	B	120.3/51.6
C417	4030016790	S.CER ECJ0EB1C103K	B	115.6/52.8
C418	4030017460	S.CER ECJ0EB1E102K	T	109.6/54.5
C419	4030016790	S.CER ECJ0EB1C103K	T	42.9/39.2
C420	4030017420	S.CER ECJ0EC1H470J	T	41/37.4
C421	4030016930	S.CER ECJ0EB1A104K	B	36/24.7
C422	4030016790	S.CER ECJ0EB1C103K	T	43.1/31.9
C423	4030017420	S.CER ECJ0EC1H470J	T	39.9/35.3
C424	4030016930	S.CER ECJ0EB1A104K	T	38.9/32.2
C425	4030017460	S.CER ECJ0EB1E102K	B	134.8/66.1
C426	4030018860	S.CER ECJ0EB0J105K	B	110/12.1
C427	4030017460	S.CER ECJ0EB1E102K	B	109.1/10.4
C430	4030017570	S.CER ECJ0EC1H040B	T	78.2/44.8
C431	4030017590	S.CER ECJ0EC1H070C	T	23/21.9
C432	4030016930	S.CER ECJ0EB1A104K	T	22.4/10.5
C433	4030016930	S.CER ECJ0EB1A104K	B	23/7.3
C434	4030017650	S.CER ECJ0EC1H270J	B	28.3/5.6
C435	4030017040	S.CER ECJ0EB1A333K	B	29.2/7.3
C436	4030016930	S.CER ECJ0EB1A104K	B	21.2/5.6
C437	4030016930	S.CER ECJ0EB1A104K	B	27.6/8.7
C438	4030016930	S.CER ECJ0EB1A104K	B	31.6/5.7
C440	4030016930	S.CER ECJ0EB1A104K	B	22.1/8.9
C441	4030017610	S.CER ECJ0EC1H090C	B	25.9/39.5
C451	4030018860	S.CER ECJ0EB0J105K	B	93.8/6.5
J1	6510025220	S.CNR AXK540145J	T	124.5/9.7
J2	6510025220	S.CNR AXK540145J	T	101.5/9.7
J3	6510021301	S.CNR 52365-1071	T	90.3/62.6
J5	6510023091	S.CNR 20FLT-SM2-TB (LF) (SN)	T	108.3/81.8
J7	6450000140	CNR HSJ0807-01-010		
J10	6510023091	S.CNR 20FLT-SM2-TB (LF) (SN)	T	71/7
W1	7120000470	JMP ERDS2T0		
W2	8900016250	CBL OPC-1701 <CMI>T/H!		
EP1	6910015600	S.BEA ACZ1005Y-241 (240)	B	39.8/8.1
EP2	6910015370	S.BEA ACZ1005Y-102-T	B	50.1/12.4
EP3	6910015370	S.BEA ACZ1005Y-102-T	T	82.6/37.1
EP4	6910010280	BEA HF70BB9.5X10.4X4.9		
EP5	6910010280	BEA HF70BB9.5X10.4X4.9		
EP6	6910011560	BEA HF70BB4.5X5X1.6		
EP8	0880002600	UBD EX-2887 [F5061D] only		

M.=Mounted side (T: Mounted on the Top side, B: Mounted on the Bottom side)
S.=Surface mount

[CONNECT UNIT]

REF NO.	ORDER NO.	DESCRIPTION		M.	H/V LOCATION
C601	4030017420	S.CER	ECJ0EC1H470J	T	12.7/4.6
C602	4030017420	S.CER	ECJ0EC1H470J	T	15.4/4.6
C603	4030017420	S.CER	ECJ0EC1H470J	T	18.2/4.6
C604	4030017420	S.CER	ECJ0EC1H470J	T	19.6/4.6
C605	4030017420	S.CER	ECJ0EC1H470J	T	20.9/4.6
C606	4030017420	S.CER	ECJ0EC1H470J	T	25.1/4.6
C607	4030017420	S.CER	ECJ0EC1H470J	T	37.5/13.2
C608	4030017420	S.CER	ECJ0EC1H470J	T	16.8/4.6
C609	4030017420	S.CER	ECJ0EC1H470J	T	40.3/13.2
C610	4030017420	S.CER	ECJ0EC1H470J	T	41.7/4.6
J601	6510025240	S.CNR	IMSA-9631S-20Y912	B	32.2/16.2
J602	6510023210	CNR	CD6125SA1J0 <CVI>		
W601	8900012711	CBL	OPC-1297A (P0.5,N20,L62)		

M.=Mounted side (T: Mounted on the Top side, B: Mounted on the Bottom side)
S.=Surface mount

BOARD LAYOUTS

The combination of this side and the bottom side shows the board layout in the same configuration as the actual P.C.Board.

• Other than "MDC compatible"

• HM-152 (TOP VIEW)

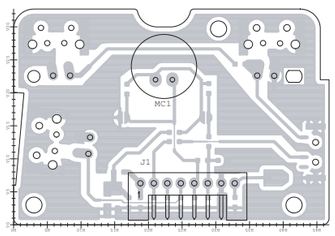

• CONNECT UNIT (TOP VIEW)

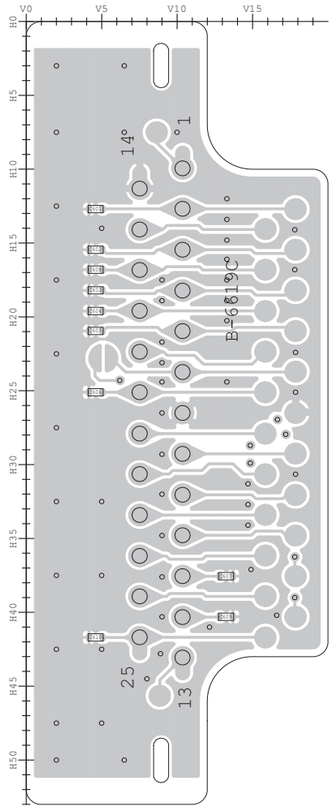

• FRONT UNIT (TOP VIEW)

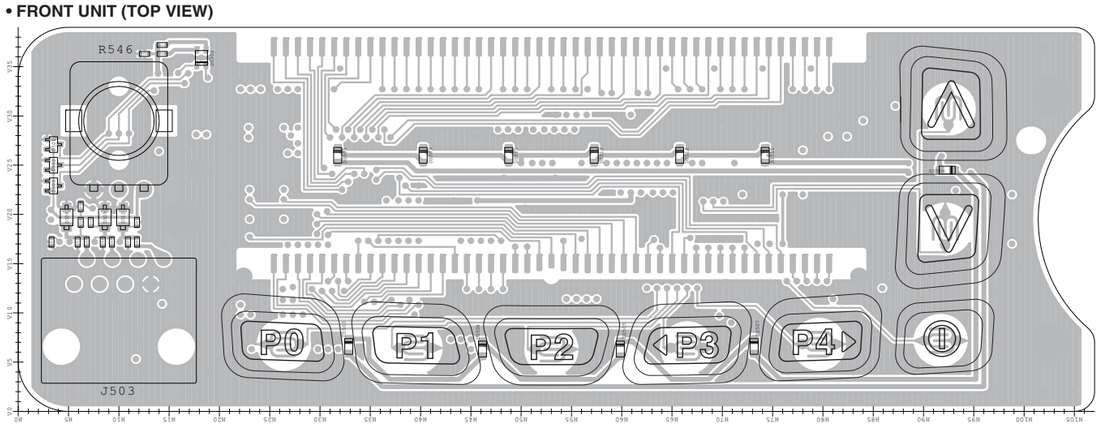

J503	
8V	CLO
AFO	PTT
MICE	MIC
GND	CLI

• MAIN UNIT (TOP VIEW)

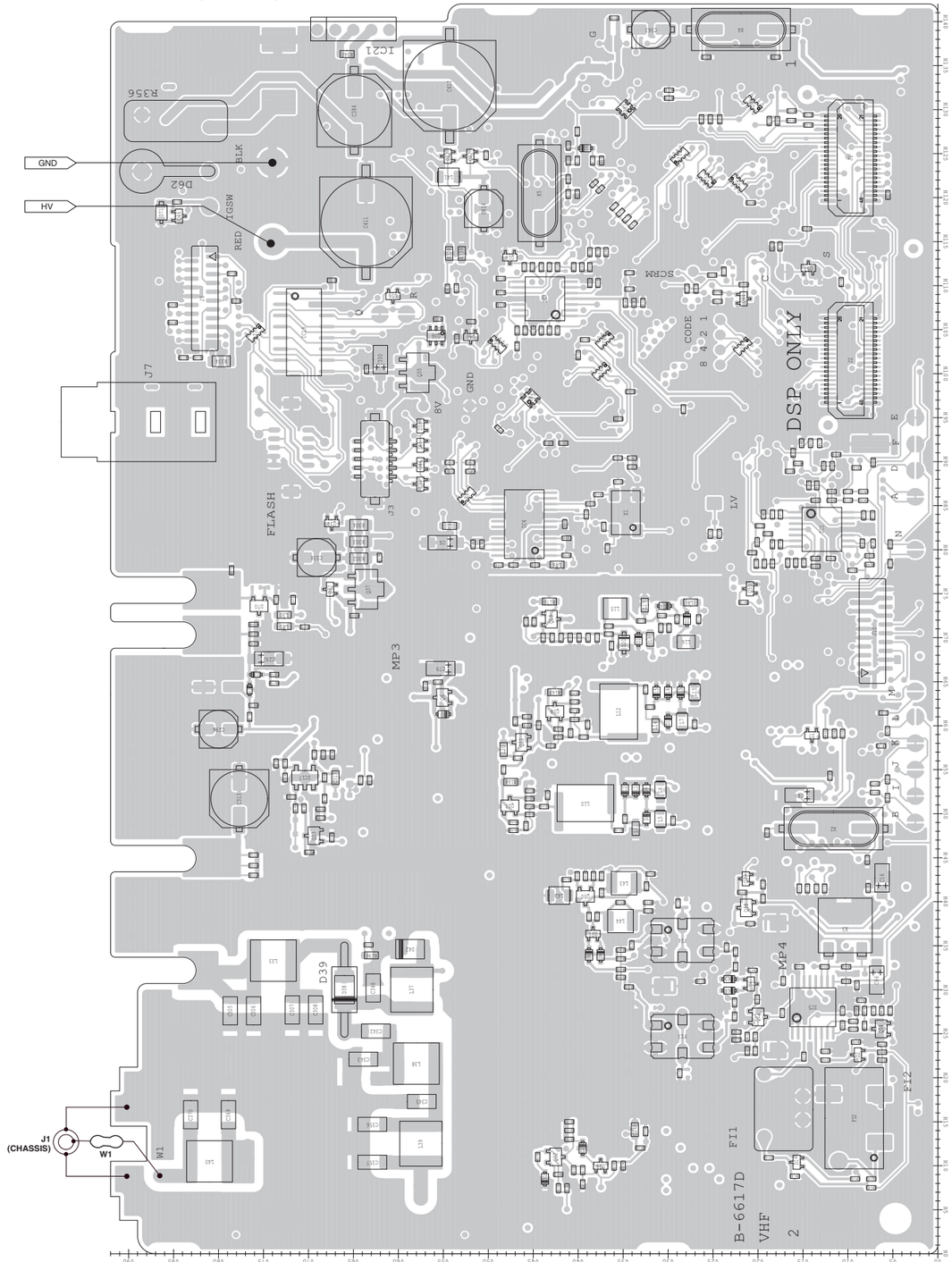

J1	
DASW	NC
PFMF	CCK
EMPH	CSI
GND	CSO
OPT3	NC
OPT2	CIRQ
OPT1	CCS
SIGO	REM
BUSY	NC
NC	AFOUT
NC	DISC
NC	RMUT
NC	BEPO
MCIN	AFON
NC	MMUTI
MCOT	NC
PTTO	VCC
PTTI	+5V
GND	GND
NC	NC

J2	
GND	GND
GND	CCK
NC	CSI
GND	CSO
OPT3	NC
OPT2	CIRQ
OPT1	CCS
NC	NC
NC	DAFO
NC	NC
VREF	DISC
NC	NC
DMI	NC
NC	NC
DMO	NC
NC	NC
NC	8V
NC	+5V
GND	GND
D_IF	D_IF

J10	
VCC	VCC
GND	NC
MFDA	8V
POSW	FMDA
MCIN	MICE
AFO	MICE
SP-	NC
NC	SP-
SP+	SP+
GND	GND

• Other than "MDC compatible"

The combination of this side and the bottom side shows the board layout in the same configuration as the actual P.C.Board.

• MAIN UNIT (BOTTOM VIEW)

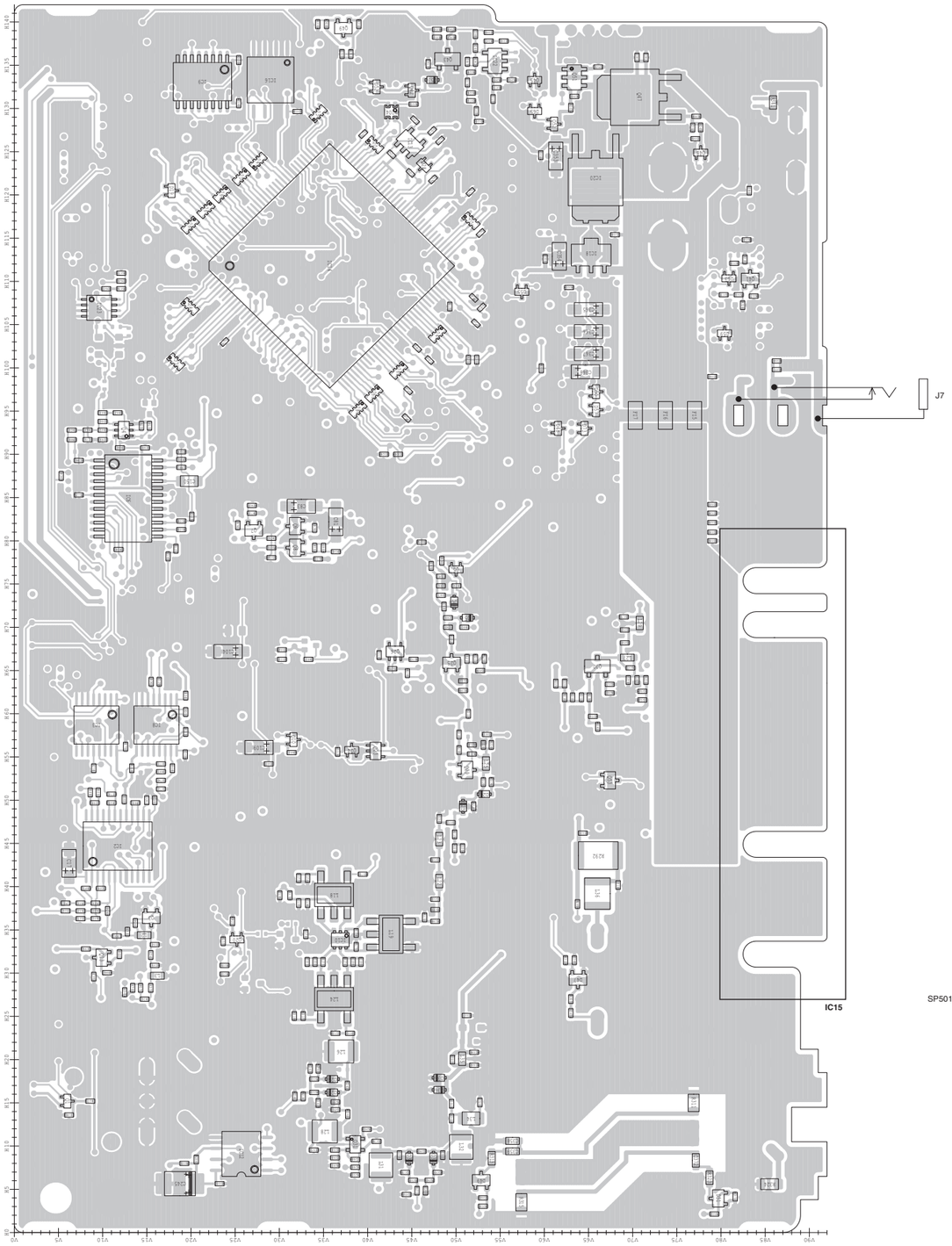

• CONNECT UNIT (BOTTOM VIEW)

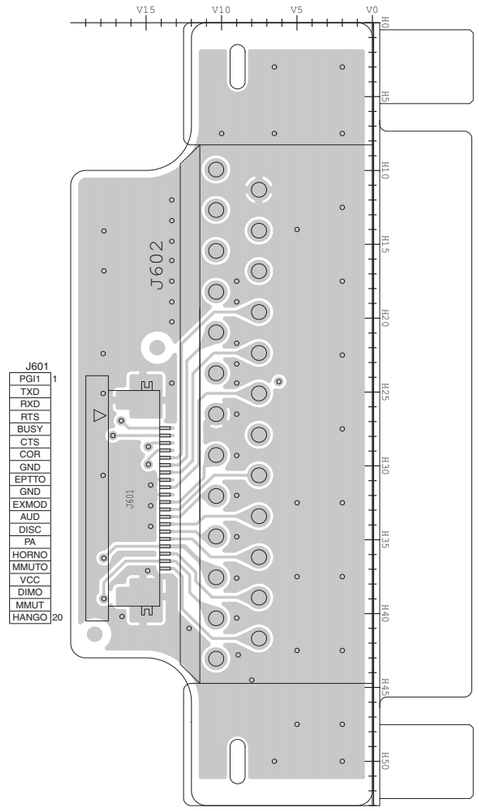

• HM-152 (BOTTOM VIEW)

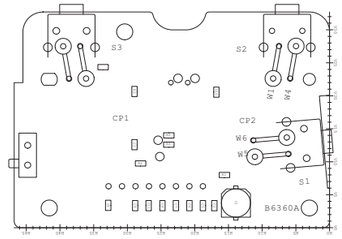

• FRONT UNIT (BOTTOM VIEW)

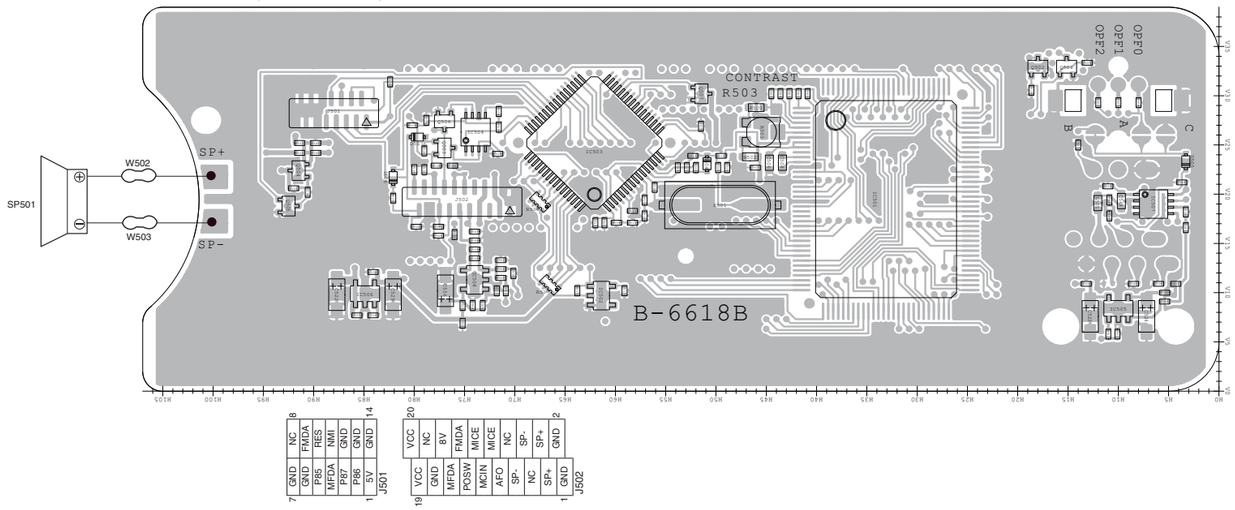

• MDC compatible

• HM-152 (TOP VIEW)

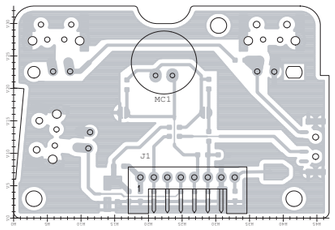

• CONNECT UNIT (TOP VIEW)

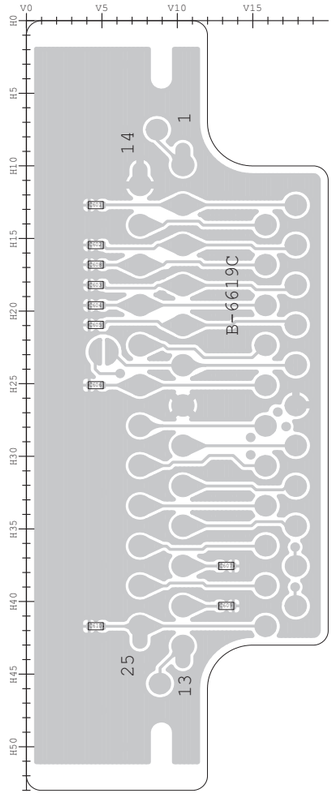

• FRONT UNIT (TOP VIEW)

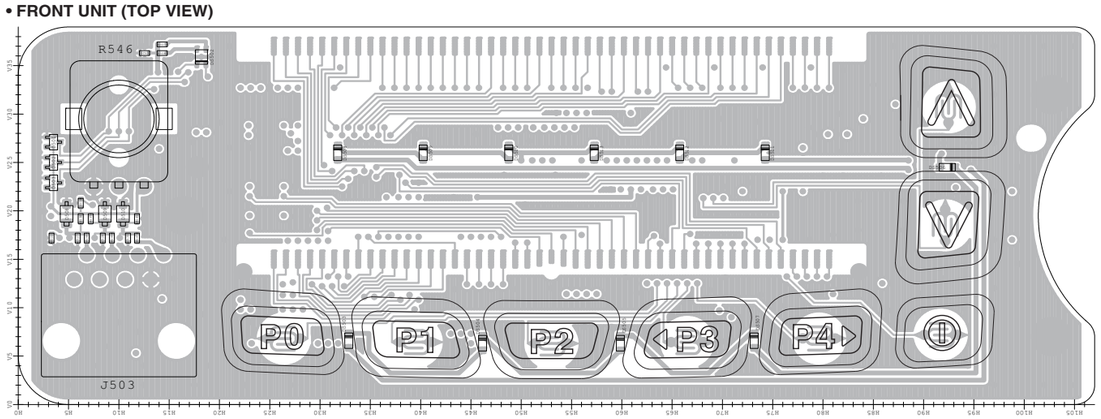

J503			
1	8V	CLO	2
	AFO	PTT	
	MICE	MIC	
7	GND	CLI	8

• MAIN-A UNIT (TOP VIEW)

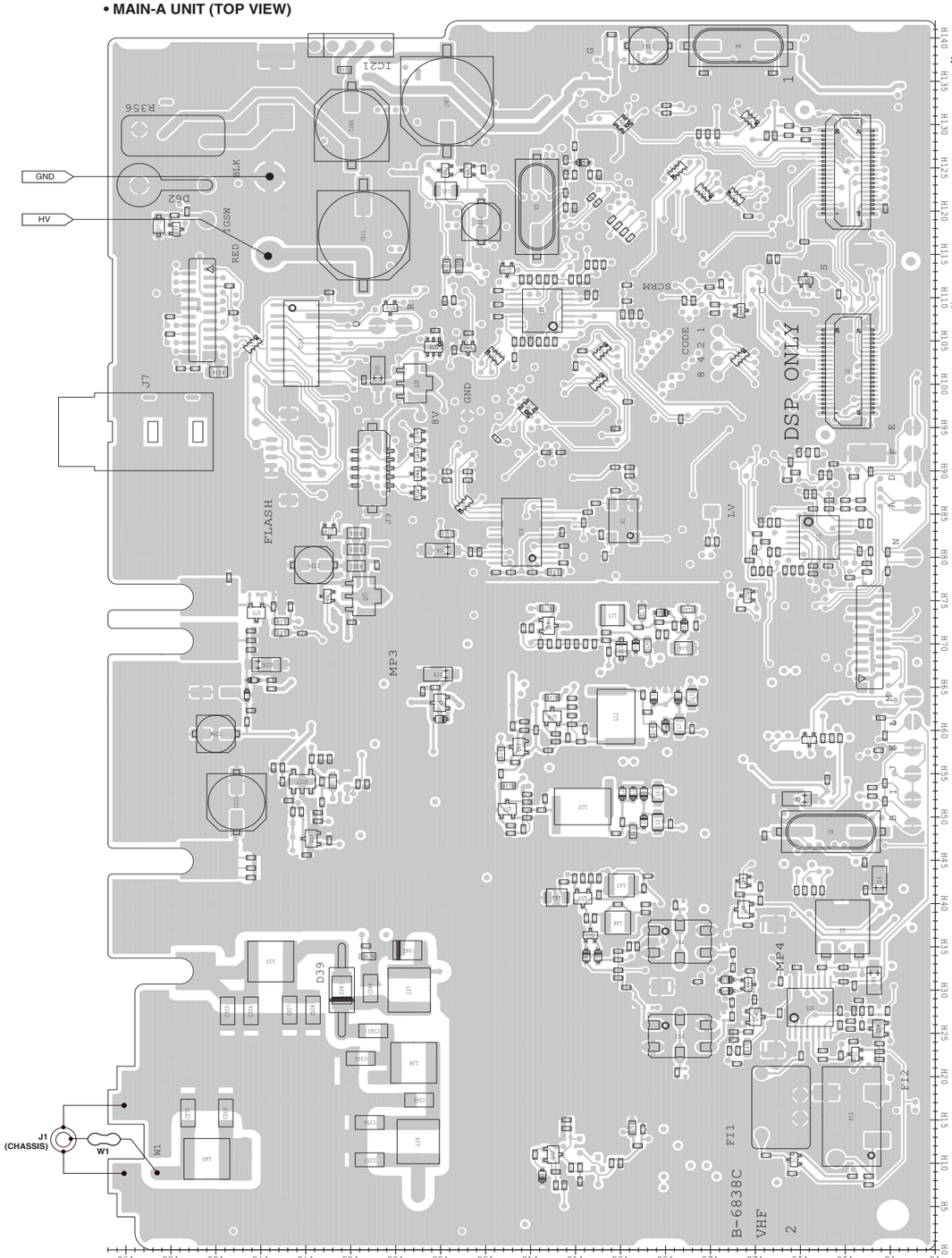

J1			
20	DASW	NC	21
	PFMF	CCK	
	EMPH	CSI	
	GND	CSO	
	OPT3	NC	
	OPT2	CIRQ	
	OPT1	CCS	
	SIGO	REM	
	BUSY	NC	
	NC	AFOUT	
	NC	DISC	
	NC	RMUT	
	NC	BEPO	
	MCIN	AFON	
	NC	MMUTI	
	MCOT	NC	
	PTTO	VCC	
	PTTI	+5V	
	GND	GND	
1	NC	NC	40

J2			
20	GND	GND	21
	GND	CCK	
	NC	CSI	
	GND	CSO	
	OPT3	NC	
	OPT2	CIRQ	
	OPT1	CCS	
	NC	NC	
	NC	DAFO	
	NC	NC	
	VREF	DISC	
	NC	NC	
	DMI	NC	
	NC	NC	
	DMO	NC	
	NC	NC	
	NC	8V	
	NC	+5V	
	GND	GND	
1	D_IF	D_IF	40

J10			
		VCC	20
19	VCC	NC	
	GND	8V	
	MFDA	FMDA	
	POSW	MICE	
	MCIN	MICE	
	AFO	NC	
	SP-	SP-	
	NC	SP+	
	SP+	GND	2
1	GND		

• MDC compatible

The combination of this side and the bottom side shows the board layout in the same configuration as the actual P.C.Board.

• MAIN-A UNIT (BOTTOM VIEW)

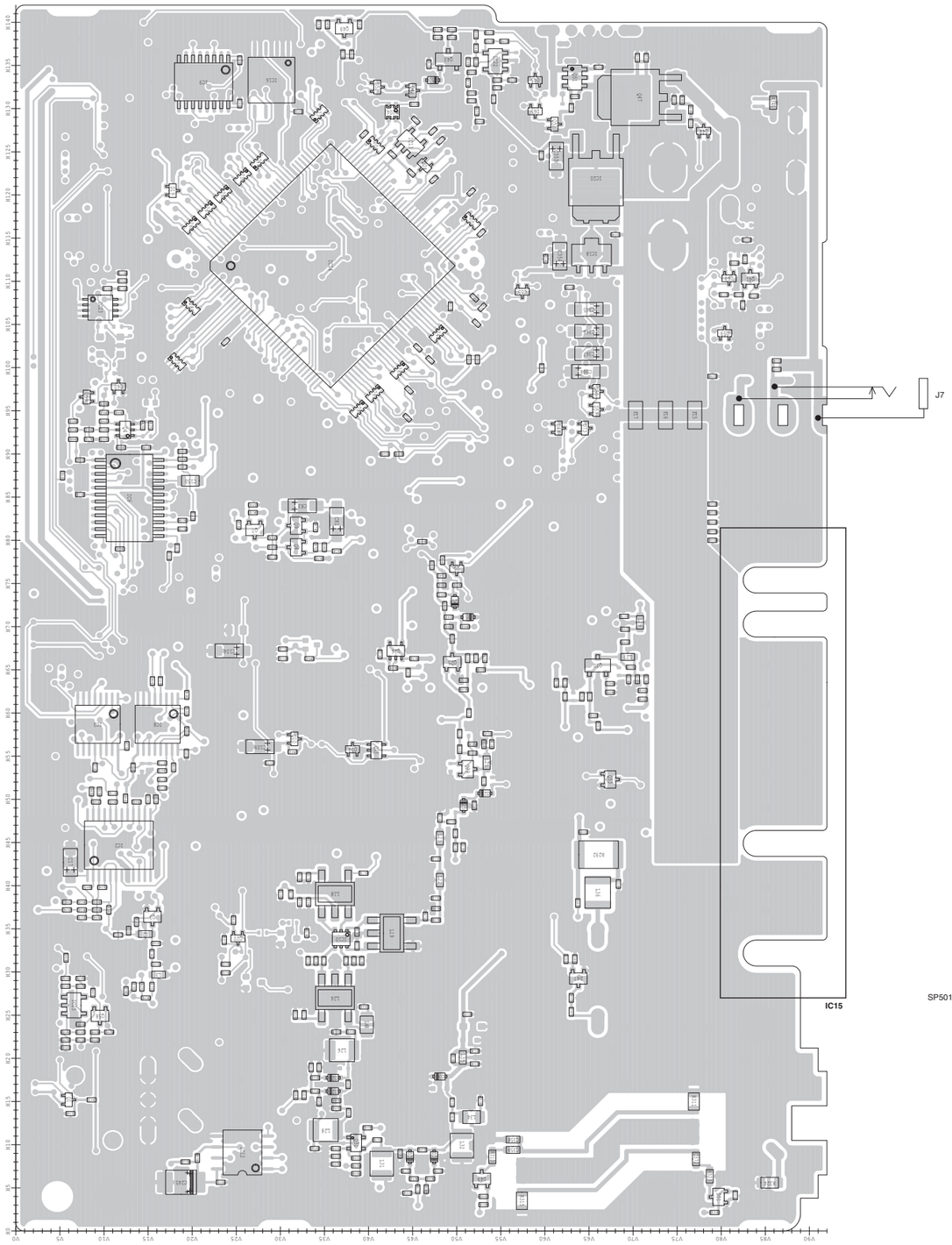

• CONNECT UNIT (BOTTOM VIEW)

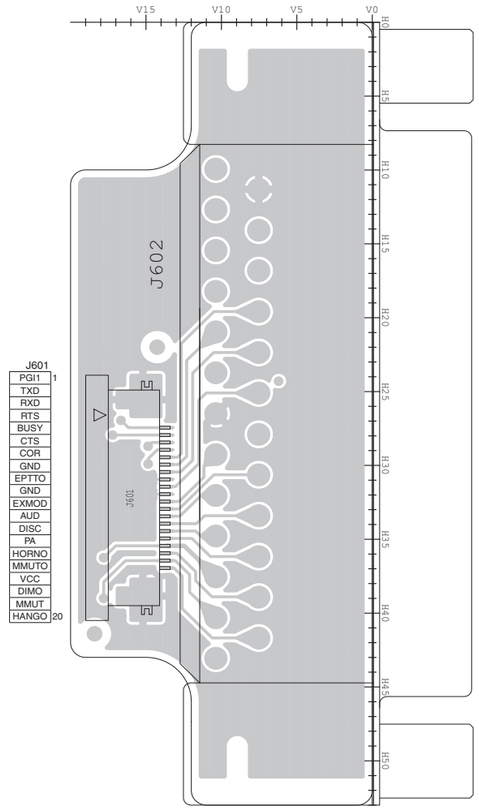

• HM-152 (BOTTOM VIEW)

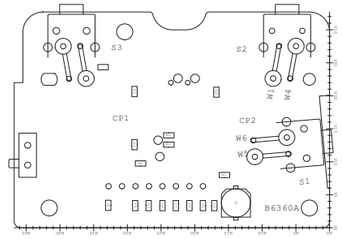

• FRONT UNIT (BOTTOM VIEW)

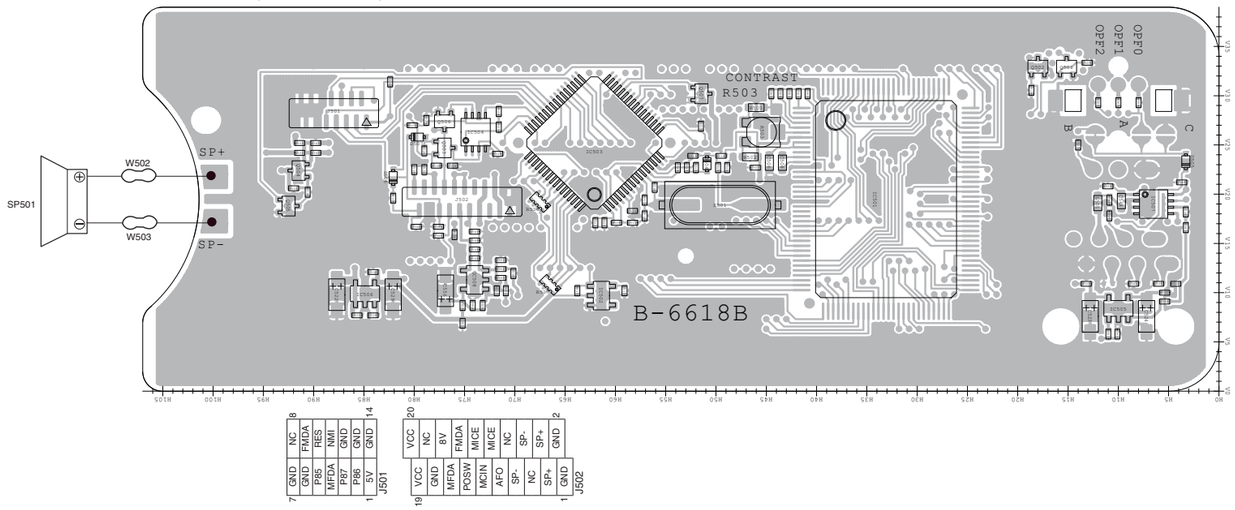

VOLTAGE DIAGRAM

FRONT UNIT

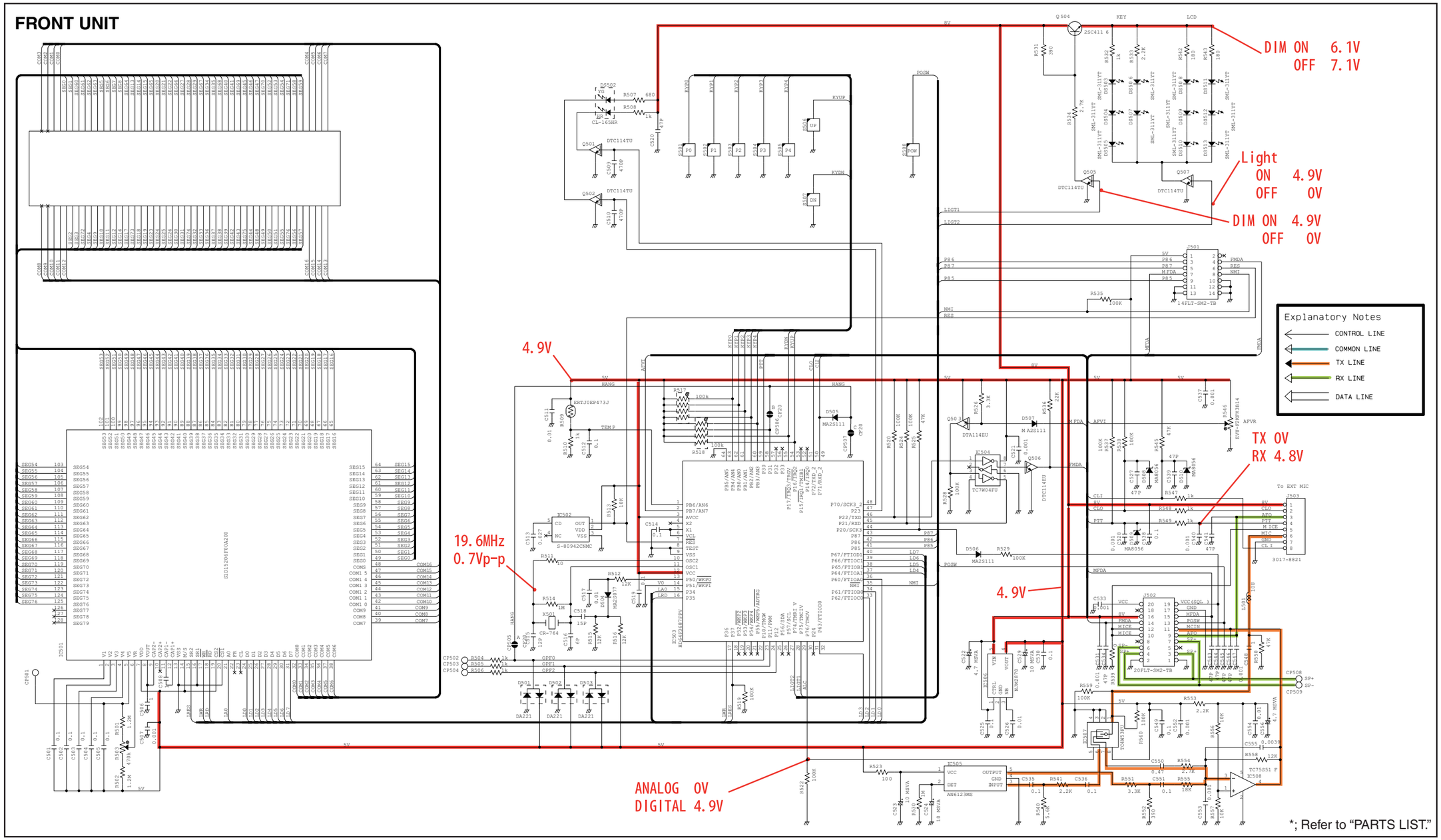

• **Other than "MDC compatible"**

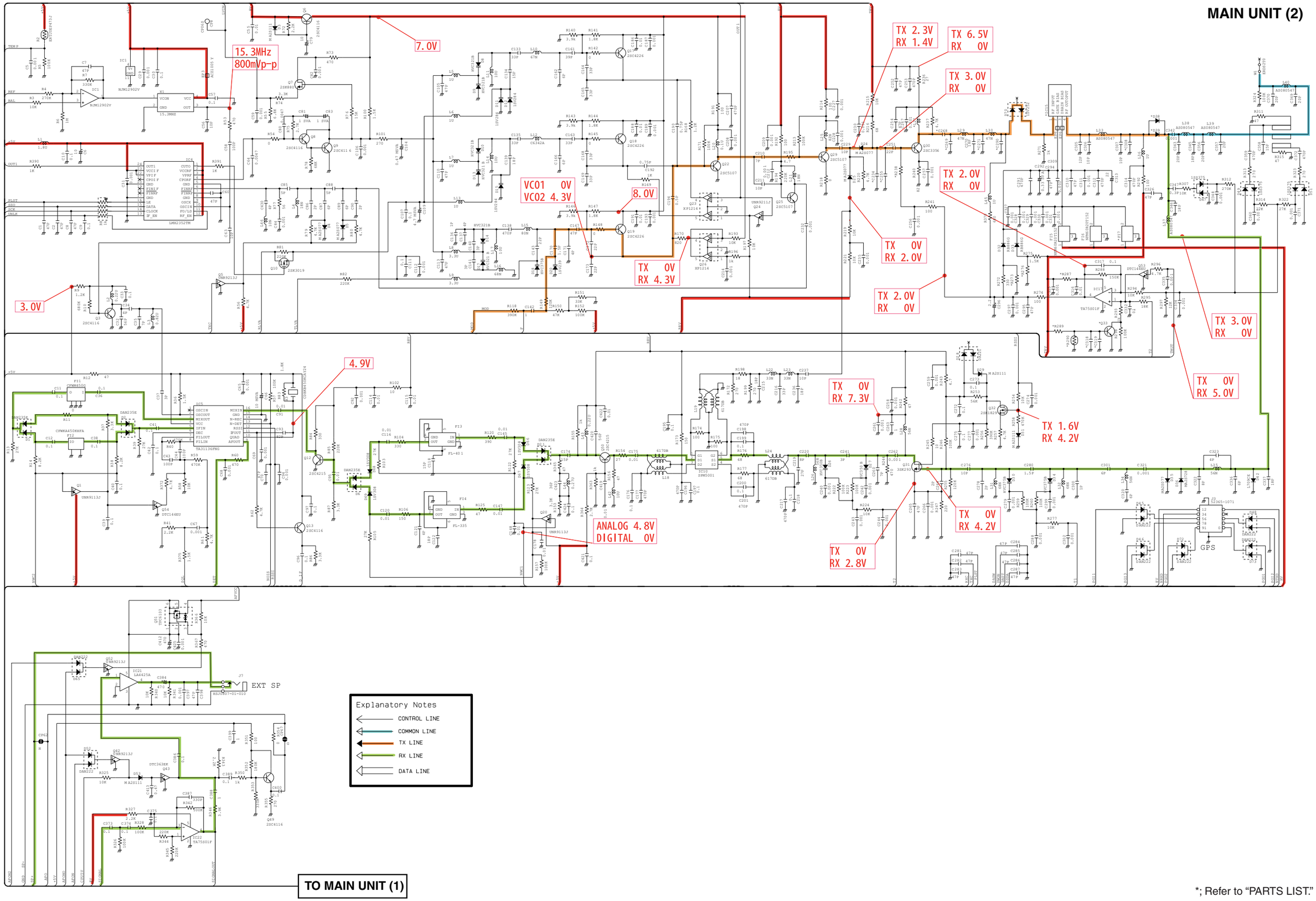

*; Refer to "PARTS LIST."

• **Other than "MDC compatible"**

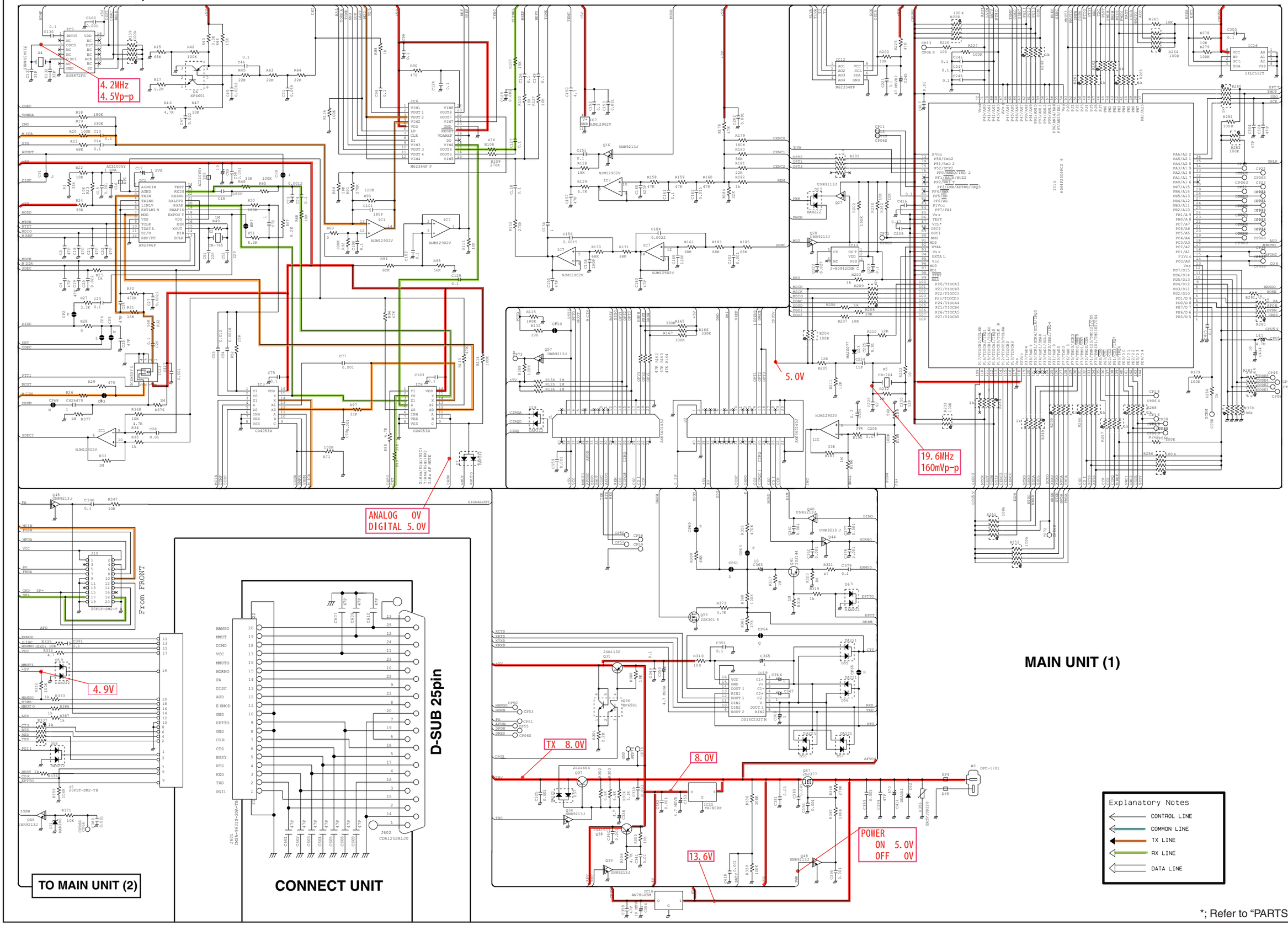

*; Refer to "PARTS LIST."

• **MDC compatible**

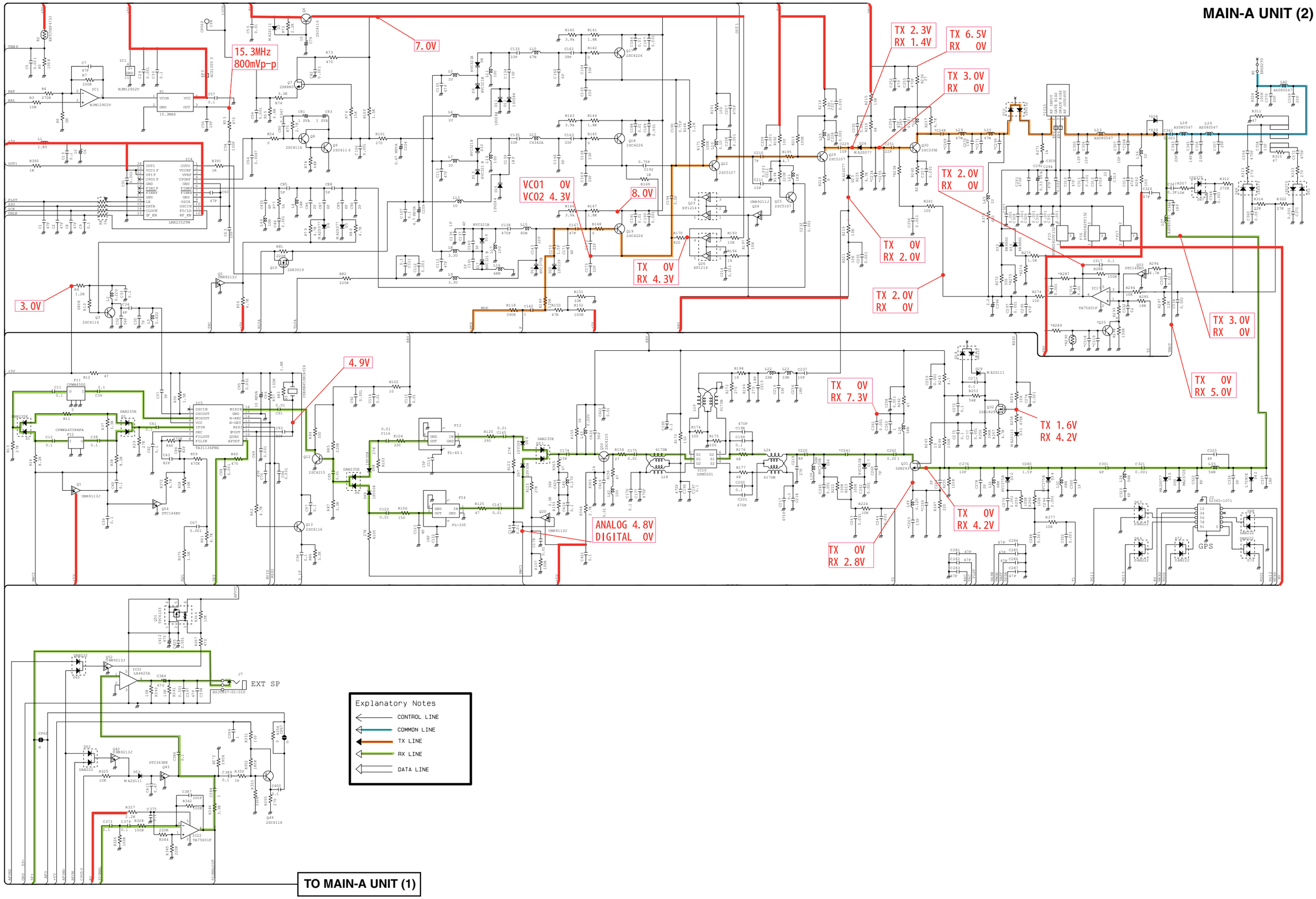

• **MDC compatible**

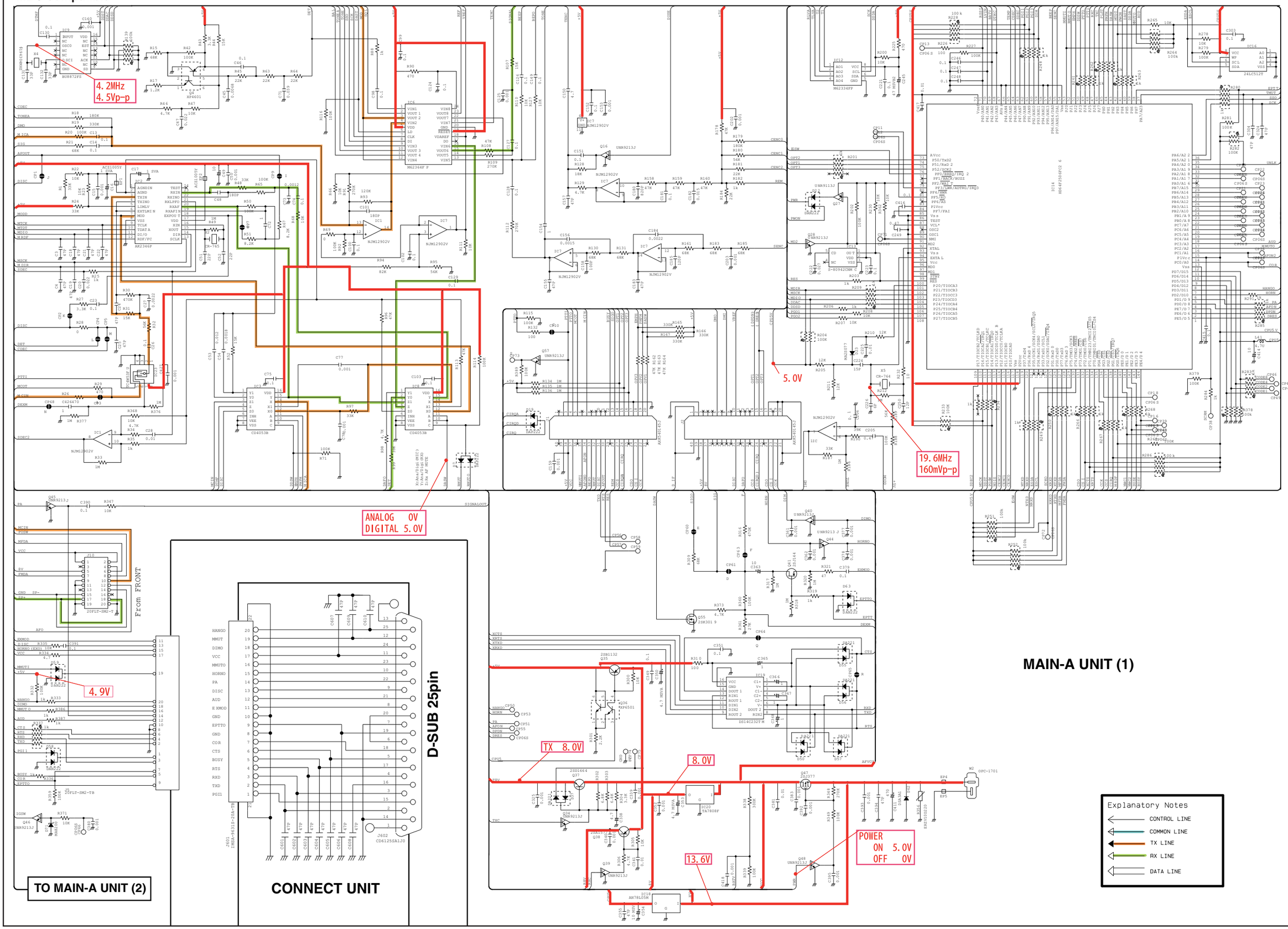

Jun. 2008

SERVICE MANUAL ADDENDUM

IC-F5061 IC-F5062 IC-F5063 IC-F5061D

CONTENTS

PARTS LIST 1
BOARD LAYOUTS 13
VOLTAGE DIAGRAM 17

MODEL	VERSION	CHANNEL SPACING	TX POWER	MDC
IC-F5061	USA-01	15.0/30.0 kHz	50 W	Not compatible
	USA-02			Compatible
IC-F5062	EXP-01	12.5/25.0 kHz	25 W	Not compatible
	EXP-02			Compatible
IC-F5063	EUR-01	12.5/20/25.0 kHz		Not compatible
	EUR-02			Compatible
IC-F5061D	USA-01	6.25/15.0/30.0 kHz	50 W	Compatible

PARTS LIST

[FRONT UNIT]

REF NO.	ORDER NO.	DESCRIPTION		M.	H/V LOCATION
IC501	1130009121	S.IC	S1D15206F00A200	B	33.1/19.5
IC502	1110005771	S.IC	S-80942CNMC-G9CT2G	B	61.4/9.7
IC503	1140010771	S.IC	HD64F3687FPV	B	62.1/25.2
IC504	1130007111	S.IC	TC7W04FU (TE12L,F)	B	73.9/26.3
IC505	1110005310	S.IC	AN6123MS	B	10/8.4
IC506	1110005350	S.IC	NJM2870F05-TE1	B	84.9/9.9
IC507	1130006221	S.IC	TC4W53FU (TE12L,F)	B	6.5/19
IC508	1130008561	S.IC	TC75S51F (TE85L,F)	B	74/11.3
Q501	1590001050	S.TR	DTC114TUA T106	B	15.1/32.9
Q502	1590001050	S.TR	DTC114TUA T106	B	18/32.9
Q503	1590001330	S.TR	DTA114EUA T106	B	77/24.7
Q504	1530002851	S.TR	2SC4116-BL (TE85R,F)	B	91.5/22.4
Q505	1590001050	S.TR	DTC114TUA T106	B	92.5/18.8
Q506	1590000680	S.TR	DTC114EUA T106	B	77/27.4
Q507	1590001050	S.TR	DTC114TUA T106	B	51.4/30.2
D501	1750000370	S.DIO	DA221 TL	T	3.5/27.1
D502	1750000370	S.DIO	DA221 TL	T	3.5/25
D503	1750000370	S.DIO	DA221 TL	T	3.5/22.9
D504	1790001260	S.DIO	MA2S077-(TX)	B	50.9/23.1
D505	1790001250	S.DIO	MA2S111-(TX)	B	3.3/23.3
D506	1790001250	S.DIO	MA2S111-(TX)	B	82.1/21.7
D507	1790001250	S.DIO	MA2S111-(TX)	B	79.7/25.8
D508	1790000950	S.ZEN	MA8056-M (TX)	T	4.8/19.7
D509	1790000950	S.ZEN	MA8056-M (TX)	T	8.6/19.7
D510	1790000950	S.ZEN	MA8056-M (TX)	T	10.4/19.7
X501	6050011720	S.XTL	CR-764 (19.6608 MHz)	B	49.6/18.9
L501	6200003640	S.COL	MLF1608E 100K-T	B	12/19.1
R501	7030003810	S.RES	ERJ3GEYJ 125 V (1.2 M)	B	46/28.8
R502	7030003810	S.RES	ERJ3GEYJ 125 V (1.2 M)	B	46.6/23.8
R503	7310005130	S.TRI	RH03ADCS5X (470 k)	B	45.5/26.3
R504	7030005120	S.RES	ERJ2GEJ 102 X (1 k)	B	8/29.3
R505	7030005120	S.RES	ERJ2GEJ 102 X (1 k)	B	10/29.3
R506	7030005120	S.RES	ERJ2GEJ 102 X (1 k)	B	12/29.3
R507	7030005010	S.RES	ERJ2GEJ 681 X (680)	T	14.3/37.2
R508	7030005120	S.RES	ERJ2GEJ 102 X (1 k)	T	14.3/36.3
R509	7510001730	S.TMR	ERTJOEP 473J	B	59.9/17.1
R510	7030005120	S.RES	ERJ2GEJ 102 X (1 k)	B	61.1/17.1
R511	7030005530	S.RES	ERJ2GEJ 100 X (10)	B	57.1/19.4
R512	7030008010	S.RES	ERJ2GEJ 123 X (12 k)	B	52/22.7
R513	7030005050	S.RES	ERJ2GEJ 103 X (10 k)	B	63.8/10.2
R514	7030005160	S.RES	ERJ2GEJ 105 X (1 M)	B	56.1/20.7
R515	7030008010	S.RES	ERJ2GEJ 123 X (12 k)	B	52.3/23.9
R516	7030008010	S.RES	ERJ2GEJ 123 X (12 k)	B	49.5/23.9
R517	7410001140	S.ARY	EXB28V104JX	B	66.5/10.8
R518	7410001140	S.ARY	EXB28V104JX	B	67.5/19.2
R519	7030005090	S.RES	ERJ2GEJ 104 X (100 k)	B	51.5/26.9
R520	7030005090	S.RES	ERJ2GEJ 104 X (100 k)	B	71.6/26.8
R522	7030005090	S.RES	ERJ2GEJ 104 X (100 k)	T	3.3/17.2
R523	7030004980	S.RES	ERJ2GEJ 101 X (100)	B	13.2/10.9
R524	7030005090	S.RES	ERJ2GEJ 104 X (100 k)	B	71.6/28.4
R525	7030005240	S.RES	ERJ2GEJ 473 X (47 k)	B	80.2/27
R526	7030007300	S.RES	ERJ2GEJ 332 X (3.3 k)	B	79/24.4
R528	7030005090	S.RES	ERJ2GEJ 104 X (100 k)	B	71.7/24.1
R529	7030005090	S.RES	ERJ2GEJ 104 X (100 k)	B	82.1/19.6
R530	7030005160	S.RES	ERJ2GEJ 105 X (1 M)	B	5.4/10
R531	7030009280	S.RES	ERJ2GEJ 391 X	B	92/20.6
R532	7030005120	S.RES	ERJ2GEJ 102 X (1 k)	B	91.4/24.2
R533	7030007290	S.RES	ERJ2GEJ 222 X (2.2 k)	B	91.4/25.2
R534	7030009140	S.RES	ERJ2GEJ 272 X (2.7 k)	B	90.6/20.2
R535	7030005090	S.RES	ERJ2GEJ 104 X (100 k)	B	82.4/31.4
R536	7030005220	S.RES	ERJ2GEJ 223 X (22 k)	B	77.8/22.9
R537	7030005090	S.RES	ERJ2GEJ 104 X (100 k)	T	7.2/19.2
R538	7030005090	S.RES	ERJ2GEJ 104 X (100 k)	T	6.2/19.2
R539	7030010040	S.RES	ERJ2GEJ-JPW	B	76/15.9
R540	7030009290	S.RES	ERJ2GEJ 562 X (5.6 k)	B	4.3/10.9
R541	7030007290	S.RES	ERJ2GEJ 222 X (2.2 k)	B	3.3/16.6
R542	7030009160	S.RES	ERJ2GEJ 181 X (180)	B	89.8/24.2
R543	7030009160	S.RES	ERJ2GEJ 181 X (180)	B	89.8/25.2
R545	7030005240	S.RES	ERJ2GEJ 473 X (47 k)	T	11.8/19.2
R546	7210003050	VAR	EVU-F2KFK3 B14 (10KB)		
R547	7030005120	S.RES	ERJ2GEJ 102 X (1 k)	T	11.8/17.2
R548	7030005120	S.RES	ERJ2GEJ 102 X (1 k)	T	6.8/17.2
R549	7030005120	S.RES	ERJ2GEJ 102 X (1 k)	T	9.3/17.2
R550	7030005240	S.RES	ERJ2GEJ 473 X (47 k)	B	10.9/19.4
R551	7030007300	S.RES	ERJ2GEJ 332 X (3.3 k)	B	11/5.8
R552	7030009280	S.RES	ERJ2GEJ 391 X	B	10.1/5.8
R553	7030007290	S.RES	ERJ2GEJ 222 X (2.2 k)	B	75.2/8.7
R554	7030007290	S.RES	ERJ2GEJ 222 X (2.2 k)	B	71.4/12.4
R555	7030005220	S.RES	ERJ2GEJ 223 X (22 k)	B	71.4/11.5
R556	7030005050	S.RES	ERJ2GEJ 103 X (10 k)	B	73.2/8.7
R557	7030005050	S.RES	ERJ2GEJ 103 X (10 k)	B	71.8/10.2
R558	7030005060	S.RES	ERJ2GEJ 333 X (33 k)	B	74/13.5
R559	7030005090	S.RES	ERJ2GEJ 104 X (100 k)	B	11/20.8
R560	7030005090	S.RES	ERJ2GEJ 104 X (100 k)	T	6.2/20.8
C501	4030016930	S.CER	ECJ0EB1A104K	B	41.8/30.2
C502	4030016930	S.CER	ECJ0EB1A104K	B	40.9/30.2

[FRONT UNIT]

REF NO.	ORDER NO.	DESCRIPTION		M.	H/V LOCATION
C503	4030016930	S.CER	ECJ0EB1A104K	B	42.7/30.2
C504	4030016930	S.CER	ECJ0EB1A104K	B	43.6/30.2
C505	4030016930	S.CER	ECJ0EB1A104K	B	44.5/30.2
C506	4030017490	S.CER	C1608 JB 1A 105K-T	B	44.7/23.2
C507	4030017460	S.CER	ECJ0EB1E102K	B	46.1/22.7
C508	4030017490	S.CER	C1608 JB 1A 105K-T	B	43.4/23.2
C509	4030017730	S.CER	ECJ0EB1E471K	B	13.1/33.3
C510	4030017730	S.CER	ECJ0EB1E471K	B	18.6/30.5
C511	4030016790	S.CER	ECJ0EB1C103K	B	58.3/17.1
C512	4030016930	S.CER	ECJ0EB1A104K	B	62/17.1
C513	4030017030	S.CER	ECJ0EB1A273K	B	59.1/10.2
C514	4030016930	S.CER	ECJ0EB1A104K	B	58.3/18.3
C515	4030017630	S.CER	ECJ0EC1H120J	B	57.1/17.8
C516	4030017580	S.CER	ECJ0EC1H060C	B	48.9/22.7
C517	4030016790	S.CER	ECJ0EB1C103K	B	52.9/22.7
C518	4030017640	S.CER	ECJ0EC1H150J	B	49.8/22.7
C519	4030016930	S.CER	ECJ0EB1A104K	B	53.8/22.7
C520	4030017420	S.CER	ECJ0EC1H470J	T	12.5/36.3
C521	4030017460	S.CER	ECJ0EB1E102K	B	78.8/27.5
C522	4550006480	S.TAN	TEESVA 1C 475M8R	B	87.7/9.8
C523	4550006250	S.TAN	TEESVA 1A 106M8R	B	12.8/7.6
C524	4550006250	S.TAN	TEESVA 1A 106M8R	B	7.2/7.6
C525	4030017330	S.CER	ECJ0EF1C104Z	B	85.7/7.7
C526	4030016790	S.CER	ECJ0EB1C103K	B	84.1/7.7
C527	4030017420	S.CER	ECJ0EC1H470J	T	5.9/17.2
C528	4030017460	S.CER	ECJ0EB1E102K	T	8.4/17.2
C529	4550006250	S.TAN	TEESVA 1A 106M8R	B	82.1/9.8
C530	4030016930	S.CER	ECJ0EB1A104K	B	84.1/12.1
C531	4030017460	S.CER	ECJ0EB1E102K	B	79/22.5
C533	4030017460	S.CER	ECJ0EB1E102K	B	80/22.5
C534	4030017420	S.CER	ECJ0EC1H470J	B	76.2/22.9
C535	4030016930	S.CER	ECJ0EB1A104K	B	5.4/9.1
C536	4030016930	S.CER	ECJ0EB1A104K	B	3.3/18.2
C537	4030017460	S.CER	ECJ0EB1E102K	B	14/25
C538	4030017330	S.CER	ECJ0EF1C104Z	B	6/10.9
C539	4030017420	S.CER	ECJ0EC1H470J	T	10.9/17.2
C540	4030017460	S.CER	ECJ0EB1E102K	B	10.9/17.8
C541	4030017420	S.CER	ECJ0EC1H470J	B	8.5/10.9
C543	4030017420	S.CER	ECJ0EC1H470J	B	77.6/16.7
C544	4030017420	S.CER	ECJ0EC1H470J	B	79.8/16.7
C545	4030017420	S.CER	ECJ0EC1H470J	B	77.6/15.8
C546	4030017420	S.CER	ECJ0EC1H470J	B	74/15.3
C547	4030017460	S.CER	ECJ0EB1E102K	B	74/16.2
C548	4030017490	S.CER	C1608 JB 1A 105K-T	B	9.7/19.3
C549	4030016930	S.CER	ECJ0EB1A104K	B	3.7/21.2
C550	4030018900	S.CER	ECJ0EB0J474K	B	70.1/11.9
C551	4030016930	S.CER	ECJ0EB1A104K	B	70.9/10.2
C552	4030017460	S.CER	ECJ0EB1E102K	B	75.2/6.9
C553	4030017460	S.CER	ECJ0EB1E102K	B	71.4/13.3
C554	4030016790	S.CER	ECJ0EB1C103K	B	74.2/8.7
C555	4030017460	S.CER	ECJ0EB1E102K	B	74/14.4
C556	4550006480	S.TAN	TEESVA 1C 475M8R	B	76.9/10.2
J501	6510022021	S.CNR	14FLT-SM2-TB (LF) (SN)	B	88/28.5
J502	6510023091	S.CNR	20FLT-SM2-TB (LF) (SN)	B	75.5/19.5
J503	6450002210	CNR	3017-8821 <KIN>		
DS501	5030003020	LCD	L6-0226TVM-3		
DS502	5040002670	S.LED	CL-165HR/YG	T	18.2/35.9
DS503	5040002310	S.LED	SML-311YTT86	T	32.8/6.5
DS504	5040002310	S.LED	SML-311YTT86	T	46.1/6.3
DS505	5040002310	S.LED	SML-311YTT86	T	59.8/6.3
DS506	5040002310	S.LED	SML-311YTT86	T	92.3/24.5
DS507	5040002310	S.LED	SML-311YTT86	T	73.1/6.5
DS508	5040002310	S.LED	SML-311YTT86	T	31.7/26
DS509	5040002310	S.LED	SML-311YTT86	T	40.2/26
DS510	5040002310	S.LED	SML-311YTT86	T	48.7/26
DS511	5040002310	S.LED	SML-311YTT86	T	74.2/26
DS512	5040002310	S.LED	SML-311YTT86	T	65.7/26
DS513	5040002310	S.LED	SML-311YTT86	T	57.2/26
SP501	2510001400	SP			
W501	8900012711	CBL	OPC-1297A (P0.5,N20,L62) <TJM>		
W502	7120000470	JMP	ERDS2T0		
W503	7120000470	JMP	ERDS2T0		
EP502	8930072220	LCT	SRCN-2979-SP-N-W		

M.=Mounted side (T: Mounted on the Top side, B: Mounted on the Bottom side)
S.=Surface mount

[MAIN UNIT] (Other than "MDC compatible")

REF NO.	ORDER NO.	DESCRIPTION	M.	H/V LOCATION
IC1	1110005340	S.IC NJM12902V-TE1-#ZZZB	T	82.3/12.9
IC2	1110006221	S.IC AK2346P-E2/P	B	44.7/11.7
IC3	1140013200	S.IC CD4053BPWR	B	58.7/9.3
IC4	1130010100	S.IC LMX2352TMX/NOPB	T	82.9/46
IC5	1110003491	S.IC TA31136FNG (D,EL)	T	28/13.9
IC6	1190001350	S.IC M62364FP 600D	B	84.9/12.9
IC7	1110005340	S.IC NJM12902V-TE1-#ZZZB	T	108.5/43.7
IC8	1140013200	S.IC CD4053BPWR	B	58.7/16.1
IC9	1130012960	S.IC BU8872FS-E2	B	133.1/21.3
IC10	1190002051	S.IC SPM5001-TL-E	B	33.8/36.9
IC12	1190001340	S.IC M62334FP 600C	B	9.1/25.7
IC13	1110005771	S.IC S-80942CNMC-G9CT2G	B	126/44.8
IC14	1140014550	S.IC HD64F2506FC26DV	B	111.8/35.7
IC15	1150002042	IC RA30H1317M-121 [EXP-01], [EUR-01]		
	1150002073	IC RA60H1317M-125 [USA-01]		
IC16	1140012950	S.IC 24LC512T-I/SM	B	133.3/29
IC17	1110002751	S.IC TA75S01F (TE85R,F)	T	54.1/70.4
IC18	1180000970	S.IC AN78L05M-(E1)	B	113/65.3
IC19	1120002510	S.IC DS14C232TM S	T	104.7/70.5
IC20	1180001251	S.IC TA7808F (TE16L,Q)	B	121.5/65.8
IC21	1110003091	IC LA4425A-E		
IC22	1110002751	S.IC TA75S01F (TE85R,F)	B	135.5/54.4
IC23	1130006221	S.IC TC4W53FU (TE12L,F)	B	106.9/9.6
Q1	1590003230	S.TR UNR9113J-(TX)	B	15.2/6
Q3	1530002851	S.TR 2SC4116-BL (TE85R,F)	B	36.4/15.5
Q4	1590001650	S.TR XP4601 (TX)	B	92.8/12.4
Q5	1590003290	S.TR UNR9213J-(TX)	B	76.7/50
Q6	1530002851	S.TR 2SC4116-BL (TE85R,F)	T	63.2/55.1
Q7	1560000541	S.FET 2SK880-Y (T5RICOM,F)	B	81.2/27.1
Q8	1530002851	S.TR 2SC4116-BL (TE85R,F)	B	79.2/31.8
Q9	1530002851	S.TR 2SC4116-BL (TE85R,F)	B	81.7/31.8
Q10	1560001360	S.FET 2SK3019 TL	B	57/31.6
Q12	1530002601	S.TR 2SC4215-O (TE85R,F)	T	26.9/20
Q13	1530002851	S.TR 2SC4116-BL (TE85R,F)	B	31.8/9.9
Q16	1590003290	S.TR UNR9213J-(TX)	T	113.2/47.6
Q17	1530002920	S.TR 2SC4226-T1 R25	T	50.9/47.6
Q18	1530002920	S.TR 2SC4226-T1 R25	T	61.6/42.6
Q19	1530002920	S.TR 2SC4226-T1 R25	T	72.1/43
Q20	1590003230	S.TR UNR9113J-(TX)	B	33.9/25.2
Q22	1530003311	S.TR 2SC5107-O (TE85R,F)	T	58.1/46.3
Q23	1590001400	S.TR XP1214 (TX)	B	55.7/40.9
Q24	1590003280	S.TR UNR9213J-(TX)	B	55.8/38.2
Q25	1530003311	S.TR 2SC5107-O (TE85R,F)	B	65.9/49.5
Q26	1590001400	S.TR XP1214 (TX)	B	67.2/43.1
Q27	1590003230	S.TR UNR9113J-(TX)	T	124.7/52
Q28	1590003290	S.TR UNR9213J-(TX)	B	123.4/46.3
Q29	1530003311	S.TR 2SC5107-O (TE85R,F)	B	53.5/51.2
Q30	1530000372	S.TR 2SC3356-T1B R (R24)	B	65.5/66
Q31	1580000731	S.FET 3SK293 (TE85L,F)	B	10.2/38.6
Q32	1560000841	S.FET 2SK1829 (TE85R,F)	T	11/42.5
Q33	1530002851	S.TR 2SC4116-BL (TE85R,F) [USA-01] only	T	47.5/69.4
Q34	1590003290	S.TR UNR9213J-(TX)	T	83/67.4
Q35	1520000460	S.TR 2SB1132 T100 R	T	100.1/57.9
Q36	1590001190	S.TR XP6501-(TX) .AB	T	104.3/55.8
Q37	1540000550	S.TR 2SD1664 T100Q	T	75.5/63.6
Q38	1510000920	S.TR 2SA1577 T106 Q	T	39.3/21.3
Q39	1590003290	S.TR UNR9213J-(TX)	T	42.6/21.3
Q40	1590003290	S.TR UNR9213J-(TX)	T	104.1/51.9
Q41	1590001451	S.FET 2SJ144-GR (TE85R,F)	B	110.3/83.3
Q42	1590003290	S.TR UNR9213J-(TX)	B	132.1/45
Q43	1590000990	S.TR DTC363EK T146	B	135.7/49
Q44	1590003290	S.TR UNR9213J-(TX)	T	108.5/21.6
Q45	1590003290	S.TR UNR9213J-(TX)	B	133.3/58.9
Q46	1590003290	S.TR UNR9213J-(TX)	T	117.9/84.4
Q47	1550000100	S.FET 2SJ377 (TE16L1,NQ)	B	131.3/71.5
Q48	1590003290	S.TR UNR9213J-(TX)	B	124.9/77.7
Q49	1530002851	S.TR 2SC4116-BL (TE85R,F)	B	139.3/37.2
Q50	1530002601	S.TR 2SC4215-O (TE85R,F)	T	40.6/39.2
Q51	1590003321	S.FET TPC6103 (TE85L,F)	B	133.6/63.4
Q52	1590003290	S.TR UNR9213J-(TX)	B	128.2/61.1
Q53	1590000430	S.TR DTC144EUA T106	B	52.3/67.4
Q54	1590000430	S.TR DTC144EUA T106	T	25.5/6.3
Q55	1560001360	S.FET 2SK3019 TL	T	75.5/20.9
Q57	1590003290	S.TR UNR9213J-(TX)	T	112/14.4
D1	1750001070	S.DIO DAN235ETL	T	10.4/15.7
D2	1750001070	S.DIO DAN235ETL	T	22.6/8.9
D3	1790001250	S.DIO MA2S111-(TX)	T	61.3/55
D4	1790001260	S.DIO MA2S077-(TX)	B	72.9/49.8
D5	1790001260	S.DIO MA2S077-(TX)	B	71.1/51.3
D6	1750001070	S.DIO DAN235ETL	T	30.6/20.8
D7	1160000140	S.DIO DAP222 TL	T	58.9/14
D8	1720000791	S.VCP HVC321B1TRF-E	T	49.5/32.4
D9	1720000791	S.VCP HVC321B1TRF-E	T	52.7/32.4
D10	1720000791	S.VCP HVC321B1TRF-E	T	60.5/30
D11	1720000641	S.VCP 1SV284 (TPH3,F)	T	52.7/33.6
D12	1720000641	S.VCP 1SV284 (TPH3,F)	T	52.7/34.8
D13	1720000791	S.VCP HVC321B1TRF-E	T	63.8/28.6
D14	1720000791	S.VCP HVC321B1TRF-E	T	73.6/30.4
D15	1720000641	S.VCP 1SV284 (TPH3,F)	T	63.8/31.3
D17	1720000791	S.VCP HVC321B1TRF-E	T	72.1/27.9
D18	1750000721	S.VCP HVC375BTRF-E	T	69.8/33.3
D19	1160000140	S.DIO DAP222 TL	B	120.5/17.8
D20	1720000471	S.VCP 1SV239 (TPH3,F)	T	69.4/34.9
D21	1750001070	S.DIO DAN235ETL	T	36.3/38.3
D22	1750000520	S.DIO DAN222TL	T	124.7/54.5
D23	1790001260	S.DIO MA2S077-(TX)	T	125.6/39.2
D24	1790001260	S.DIO MA2S077-(TX)	B	50.7/53.2
D25	1790001260	S.DIO MA2S077-(TX)	B	49.3/50.8

[MAIN UNIT] (Other than "MDC compatible")

REF NO.	ORDER NO.	DESCRIPTION	M.	H/V LOCATION
D26	1750000711	S.VCP HVC350BTRF-E	B	17.7/36
D27	1750000711	S.VCP HVC350BTRF-E	B	16.2/36
D28	1750000370	S.DIO DA221 TL	T	10/37.5
D29	1790001250	S.DIO MA2S111-(TX)	T	12/39.5
D30	1750000721	S.VCP HVC375BTRF-E	B	8.6/44.7
D31	1790001250	S.DIO MA2S111-(TX)	T	8.5/43.7
D32	1750001080	S.DIO RB886G T2R	T	64.1/76.5
D33	1750001080	S.DIO RB886G T2R	T	65.8/75.8
D34	1750000721	S.VCP HVC375BTRF-E	B	8.6/47.4
D35	1790001260	S.DIO MA2S077-(TX)	B	17.9/48.1
D36	1790001240	S.DIO MA2S728-(TX)	B	16.5/48.1
D37	1750000370	S.DIO DA221 TL	T	75.5/67.6
D38	1750000511	S.DIO UX9401F-STD/TR [EXP-01], [EUR-01] only	T	30/66
D39	1710001061	DIO L407CDB [USA-01] only		
D42	1750001360	S.DIO L709CER (9401)	T	34.6/58.7
D45	1750000520	S.DIO DAN222TL	T	91.8/57.5
D46	1750000520	S.DIO DAN222TL	T	89.6/57.5
D47	1790001211	S.DIO 1SS375-TL-E	B	29.2/63.8
D48	1750000520	S.DIO DAN222TL	B	93/61.5
D49	1790001211	S.DIO 1SS375-TL-E	B	6/52.8
D50	1750000370	S.DIO DA221 TL	B	97.2/65.8
D51	1790001211	S.DIO 1SS375-TL-E	B	3.9/79.7
D52	1750000520	S.DIO DAN222TL	B	132.5/41
D53	1790001250	S.DIO MA2S111-(TX)	B	133.3/47.3
D55	1750000370	S.DIO DA221 TL	B	108.8/57.4
D56	1750000370	S.DIO DA221 TL	T	108.8/60.6
D57	1750000370	S.DIO DA221 TL	B	95.1/65.8
D58	1750000520	S.DIO DAN222TL	T	94/57.5
D59	1750000520	S.DIO DAN222TL	B	104/80.4
D62	1790000700	DIO DSA3A1		
D63	1750000520	S.DIO DAN222TL	B	110.3/80.9
D65	1750000520	S.DIO DAN222TL	B	129.7/58.9
D66	1790001621	S.DIO 1SV308 (TPL3,F)	T	33.9/38.8
D67	1790001621	S.DIO 1SV308 (TPL3,F)	T	33.9/37.5
D68	1790001621	S.DIO 1SV308 (TPL3,F)	T	29.9/23.2
D69	1790001621	S.DIO 1SV308 (TPL3,F)	T	31.2/23.2
D70	1750000351	S.DIO 1SV252 (TE85L,F)	T	73.6/75.5
D71	1730002410	S.ZEN MA8200-H (TX)	T	118.3/86.3
D72	1750000520	S.DIO DAN222TL	T	87.4/57.5
D73	1750000520	S.DIO DAN222TL	B	93/64.5
FI1	2020001410	CER CFWLB450KGFA-B0		
FI2	2020002470	S.CER CFWKA450KHFA-R0	T	15.4/9.3
FI3	2030000500	S.MLH FL-401 (46.35 MHz)	T	24.7/28.4
FI4	2030000150	S.MLH FL-335 (46.350 MHz)	T	35.6/28.4
FI5	2040001440	S.LC NFE31PT152Z1E9L	B	94.5/77
FI6	2040001440	S.LC NFE31PT152Z1E9L	B	94.5/73.7
FI7	2040001440	S.LC NFE31PT152Z1E9L [USA-01] only	B	94.5/70.3
X1	6050012380	S.XTL CR-826 (15.3 MHz)	T	84.2/34.7
X2	6050011730	S.XTL CR-765 (3.6864 MHz)	T	48.3/11.6
X3	6070000300	S.DCR JTBM450CX24 <JJE>	T	37.1/10.3
X4	6050012320	S.XTL CR-818 (4.194304 MHz)	T	139.1/21.9
X5	6050011720	S.XTL CR-764 (19.6608 MHz)	T	120.5/44.3
L1	6200004660	S.COL MLF1608A 1R8K-T	T	82.7/54.3
L2	6200003540	S.COL MLF1608D R22K-T	B	34.4/14.7
L3	6200004480	S.COL MLF1608D R82K-T	B	29.7/16.2
L4	6200007911	S.COL ELJRF 18NJFB	B	75.9/48.3
L5	6200007120	S.COL MLF1608A 3R3K-T	T	49.4/30.8
L6	6200007120	S.COL MLF1608A 3R3K-T	T	52.7/30.8
L7	6200007120	S.COL MLF1608A 3R3K-T	T	60.5/28.4
L8	6200007170	S.COL MLF1608A 3R3K-T	T	74/27.5
L9	6200007170	S.COL MLF1608A 3R3K-T	T	69.8/32
L10	6200010600	S.COL C6342A-67NG-A	T	51.2/39.2
L11	6200003640	S.COL MLF1608E 100K-T	T	48.3/33.6
L12	6200009910	S.COL C6342A-88NG-A	T	61.6/35.5
L13	6200007120	S.COL MLF1608A 3R3K-T	T	63.8/27
L14	6200003640	S.COL MLF1608E 100K-T	T	60/31.4
L15	6200012450	S.COL 0.25-1.9-8TL 73N (COAT)	T	73.3/35.9
L16	6200008090	S.COL LQW2BHN68NJ03L	T	69.5/28
L17	6200003640	S.COL MLF1608E 100K-T	T	73.7/32.6
L18	6130003000	S.COL #617DB-1714=P3	B	39/36.2
L19	6130003000	S.COL #617DB-1714=P3	B	34.5/42.6
L20	6200009181	S.COL ELJRE R10JFA	T	57.3/48.3
L21	6200007911	S.COL ELJRF 18NJFB	B	66.3/51.2
L22	6200005721	S.COL ELJRE 33NGFA	B	40.6/48.1
L23	6200005721	S.COL ELJRE 33NGFA	B	45.5/48.1
L24	6130003000	S.COL #617DB-1714=P3	B	27/36.2
L25	6200009151	S.COL ELJRE 82NJFA	B	54.2/53.4
L26	6200010720	S.COL LQW2BHN56NJ03L	B	20.9/37
L27	6200009181	S.COL ELJRE R10JFA	B	66.5/69.4
L28	6200010720	S.COL LQW2BHN56NJ03L	B	11.7/35.1
L29	6200009171	S.COL ELJRE 47NJFA	B	70.5/70.8
L30	6200009171	S.COL ELJRE 47NJFA	T	72.6/72.7
L31	6200010730	S.COL LQW2BHN68NJ03L	B	7.8/41.5
L32	6200010730	S.COL LQW2BHN68NJ03L	B	9.9/50.6
L33	6200010050	S.COL AS080547-47N	T	33.3/73.9
L34	6200007750	S.COL LQW2BHN56NJ03L	B	13.2/51.7
L35	6200006991	S.COL ELJRE 56NGFA	B	20.1/50.7
L36	6200010420	S.COL FHW1210HC 1R0JGT <JJE>	B	39.2/66
L37	6200010050	S.COL AS080547-47N	T	30/58.5
L38	6200010050	S.COL AS080547-47N	T	21.6/58
L39	6200010050	S.COL AS080547-47N	T	12.5/57.5
L40	6200010050	S.COL AS080547-47N	T	10.5/81
L41	6200002861	S.COL NLV25T-4R7J	T	122.3/54.4
L42	6200005011	S.COL NLV25T-100J	T	40.7/42.1
L43	6200010680	S.COL C2520C-R22G-A (0.22U)	T	42.1/34.9
L44	6200010740	S.COL C2520C-R27G-A	T	37.8/35.3
L45	6200003960	S.COL MLF1608A 1R0K-T	T	71.3/72.7

M.=Mounted side (T: Mounted on the Top side, B: Mounted on the Bottom side)
S.=Surface mount

[MAIN UNIT] (Other than "MDC compatible")

REF NO.	ORDER NO.	DESCRIPTION	M.	H/V LOCATION
L46	6200005661	S.COL ELJRE 10NGFA	T	78.3/42.3
R1	7030005060	S.RES ERJ2GEJ 333 X (33 k)	B	38.1/5.8
R2	7510001730	S.TMR ERTJOEP 473J	T	90.4/35.6
R3	7030005050	S.RES ERJ2GEJ 103 X (10 k)	T	79/11.9
R4	7030005700	S.RES ERJ2GEJ 274 X (270 k)	B	88.5/18.9
R5	7030005090	S.RES ERJ2GEJ 104 X (100 k)	T	90.4/34
R6	7030005160	S.RES ERJ2GEJ 105 X (1 M)	T	84/19.4
R7	7030005230	S.RES ERJ2GEJ 334 X (330 k)	T	84/17.5
R8	7410001130	S.ARY EXB28V102JX	T	86.1/52.4
R9	7030007570	S.RES ERJ2GEJ 122 X (1.2 k)	B	34.3/11.6
R10	7030007060	S.RES ERJ2GEJ 684X (680 k)	B	35.8/13.7
R11	7030010040	S.RES ERJ2GEJ-JPW	T	8.5/9.2
R12	7030004970	S.RES ERJ2GEJ 470 X (47)	T	31/17.2
R13	7030005600	S.RES ERJ2GEJ 273 X (27 k)	T	8.8/15.9
R14	7030005210	S.RES ERJ2GEJ 822 X (8.2 k)	T	7.5/7.4
R15	7030005070	S.RES ERJ2GEJ 683 X (68 k)	B	93.3/14.4
R17	7030007570	S.RES ERJ2GEJ 122 X (1.2 k)	B	93.3/15.3
R18	7030008300	S.RES ERJ2GEJ 184 X (180 k)	B	79/11.8
R19	7030005230	S.RES ERJ2GEJ 334 X (330 k)	T	89.3/9
R20	7030005090	S.RES ERJ2GEJ 104 X (100 k)	T	85.6/8.3
R21	7030005070	S.RES ERJ2GEJ 683 X (68 k)	T	86.6/8.3
R22	7030005050	S.RES ERJ2GEJ 103 X (10 k)	B	38.1/7.5
R23	7030005050	S.RES ERJ2GEJ 103 X (10 k)	B	38.1/9.2
R24	7030005060	S.RES ERJ2GEJ 333 X (33 k)	B	37.2/10.5
R25	7030005120	S.RES ERJ2GEJ 102 X (1 k)	B	100.9/51.4
R26	7030005000	S.RES ERJ2GEJ 471 X (470)	B	87.5/5.3
R27	7030007300	S.RES ERJ2GEJ 332 X (3.3 k)	T	53.9/5.6
R28	7030010040	S.RES ERJ2GEJ-JPW	T	59.4/5.6
R29	7030005000	S.RES ERJ2GEJ 471 X (470)	T	116.4/14.5
R30	7030005170	S.RES ERJ2GEJ 474 X (470 k)	B	37.2/9.2
R31	7030007340	S.RES ERJ2GEJ 153 X (15 k)	B	36.3/9.2
R32	7030005720	S.RES ERJ2GEJ 563 X (56 k)	B	37.2/7.5
R33	7030005160	S.RES ERJ2GEJ 105 X (1 M)	T	80.7/8.4
R34	7030005040	S.RES ERJ2GEJ 472 X (4.7 k)	T	80.7/7.2
R35	7030005120	S.RES ERJ2GEJ 102 X (1 k)	T	77.6/9.5
R36	7030005030	S.RES ERJ2GEJ 152 X (1.5 k)	B	27/14.7
R37	7030007300	S.RES ERJ2GEJ 332 X (3.3 k)	B	15.2/8.6
R38	7030005210	S.RES ERJ2GEJ 822 X (8.2 k)	T	22.9/6.2
R39	7030005600	S.RES ERJ2GEJ 273 X (27 k)	T	24/9.1
R40	7030005170	S.RES ERJ2GEJ 474 X (470 k)	T	25.9/10.6
R41	7030007290	S.RES ERJ2GEJ 222 X (2.2 k)	T	27.6/6.2
R42	7030005090	S.RES ERJ2GEJ 104 X (100 k)	B	94.8/11.7
R43	7030007300	S.RES ERJ2GEJ 332 X (3.3 k)	B	94.8/10
R44	7030007340	S.RES ERJ2GEJ 153 X (15 k)	B	90.7/11.9
R45	7030005220	S.RES ERJ2GEJ 223 X (22 k)	B	92.8/10
R46	7030005040	S.RES ERJ2GEJ 472 X (4.7 k)	T	92.1/14.1
R47	7030005050	S.RES ERJ2GEJ 103 X (10 k)	T	92.1/13.1
R48	7030005060	S.RES ERJ2GEJ 333 X (33 k)	B	50.9/8.6
R49	7030005160	S.RES ERJ2GEJ 105 X (1 M)	B	49.7/13.7
R50	7030005090	S.RES ERJ2GEJ 104 X (100 k)	B	49.7/11
R51	7030005210	S.RES ERJ2GEJ 822 X (8.2 k)	T	52.4/7
R52	7030007340	S.RES ERJ2GEJ 153 X (15 k)	T	59.1/12.5
R53	7030005000	S.RES ERJ2GEJ 471 X (470)	T	86.2/37.7
R54	7030010040	S.RES ERJ2GEJ-JPW	B	78.7/36.4
R55	7030005290	S.RES ERJ2GEJ 682 X (6.8 k)	T	81.8/25.3
R56	7030005040	S.RES ERJ2GEJ 472 X (4.7 k)	B	77.7/48.4
R57	7030005090	S.RES ERJ2GEJ 104 X (100 k)	B	28.3/14.3
R58	7030005050	S.RES ERJ2GEJ 103 X (10 k)	T	27.6/9
R59	7030005170	S.RES ERJ2GEJ 474 X (470 k)	T	27.6/8.1
R60	7030005000	S.RES ERJ2GEJ 471 X (470)	T	30.9/10.2
R61	7030005040	S.RES ERJ2GEJ 472 X (4.7 k)	T	28.8/8.5
R62	7030005040	S.RES ERJ2GEJ 472 X (4.7 k)	B	32.2/11.9
R63	7030005220	S.RES ERJ2GEJ 223 X (22 k)	B	92.8/8.3
R64	7030005220	S.RES ERJ2GEJ 223 X (22 k)	B	92.8/6.5
R65	7030005090	S.RES ERJ2GEJ 104 X (100 k)	B	50.9/9.5
R66	7030005050	S.RES ERJ2GEJ 103 X (10 k)	T	86.6/11.8
R67	7030005210	S.RES ERJ2GEJ 822 X (8.2 k)	T	53.4/7
R68	7030007290	S.RES ERJ2GEJ 222 X (2.2 k)	B	53.7/17.9
R69	7030010040	S.RES ERJ2GEJ-JPW	T	85.6/13.6
R71	7030005090	S.RES ERJ2GEJ 104 X (100 k)	T	57.7/6.3
R72	7030007290	S.RES ERJ2GEJ 222 X (2.2 k)	T	64.9/55.6
R73	7030005000	S.RES ERJ2GEJ 471 X (470)	B	83.2/26.9
R74	7030007300	S.RES ERJ2GEJ 332 X (3.3 k)	B	81.8/25.3
R75	7030009140	S.RES ERJ2GEJ 272 X (2.7 k)	B	79.2/34
R76	7030007340	S.RES ERJ2GEJ 153 X (15 k)	B	80.3/29.1
R77	7030005580	S.RES ERJ2GEJ 560 X (56)	T	78.2/47.2
R78	7030005070	S.RES ERJ2GEJ 683 X (68 k)	B	81.5/34
R79	7030005040	S.RES ERJ2GEJ 472 X (4.7 k)	B	74.8/50
R80	7030005040	S.RES ERJ2GEJ 472 X (4.7 k)	B	70/50.9
R81	7030005110	S.RES ERJ2GEJ 224 X (220 k)	B	55.5/31.4
R82	7030005110	S.RES ERJ2GEJ 224 X (220 k)	B	66.3/33.3
R83	7030008400	S.RES ERJ2GEJ 182 X (1.8 k)	T	32.6/10.2
R84	7030007280	S.RES ERJ2GEJ 331 X (330)	T	24.6/20.3
R85	7030005110	S.RES ERJ2GEJ 224 X (220 k)	T	24.6/21.2
R86	7030007300	S.RES ERJ2GEJ 332 X (3.3 k)	B	30/10.5
R87	7030007300	S.RES ERJ2GEJ 332 X (3.3 k)	T	32.2/20.6
R88	7030005120	S.RES ERJ2GEJ 102 X (1 k)	B	91.7/6.5
R90	7030005000	S.RES ERJ2GEJ 471 X (470)	B	89.4/18.9
R91	7030005700	S.RES ERJ2GEJ 274 X (270 k)	T	85.6/11.8
R92	7030005090	S.RES ERJ2GEJ 104 X (100 k)	T	87.3/13.4
R93	7030005310	S.RES ERJ2GEJ 124 X (120 k)	T	83.9/8.2
R94	7030005080	S.RES ERJ2GEJ 823 X (82 k)	T	108/34.7
R95	7030005720	S.RES ERJ2GEJ 563 X (56 k)	T	108/33.8
R96	7030005240	S.RES ERJ2GEJ 473 X (47 k)	B	63.7/15.5
R97	7030005060	S.RES ERJ2GEJ 333 X (33 k)	B	53.3/16.6
R98	7030005040	S.RES ERJ2GEJ 472 X (4.7 k)	B	62.1/19.4
R99	7030005240	S.RES ERJ2GEJ 473 X (47 k)	B	60.2/19.4
R100	7030005030	S.RES ERJ2GEJ 152 X (1.5 k)	B	77.9/34.4
R101	7030008280	S.RES ERJ2GEJ 271 X (270)	B	79.2/29.1
R102	7030005530	S.RES ERJ2GEJ 100 X (10)	T	23/20.3
R103	7030005600	S.RES ERJ2GEJ 273 X (27 k)	B	29.9/23.8
R104	7030007280	S.RES ERJ2GEJ 331 X (330)	T	26.9/22.6

[MAIN UNIT] (Other than "MDC compatible")

REF NO.	ORDER NO.	DESCRIPTION	M.	H/V LOCATION
R105	7030005600	S.RES ERJ2GEJ 273 X (27 k)	B	30.9/23.8
R106	7030007270	S.RES ERJ2GEJ 151 X (150)	T	34.3/22.5
R107	7030007340	S.RES ERJ2GEJ 153 X (15 k)	B	129.7/52.3
R108	7030005240	S.RES ERJ2GEJ 473 X (47 k)	B	82.3/18.9
R109	7030005700	S.RES ERJ2GEJ 274 X (270 k)	B	81.3/18.9
R110	7030005050	S.RES ERJ2GEJ 103 X (10 k)	T	78.4/20.2
R111	7030005050	S.RES ERJ2GEJ 103 X (10 k)	T	95.9/28.3
R112	7030005700	S.RES ERJ2GEJ 274 X (270 k)	T	80.8/20.1
R113	7030005240	S.RES ERJ2GEJ 473 X (47 k)	B	57.9/19.4
R114	7030005090	S.RES ERJ2GEJ 104 X (100 k)	B	53.7/13.3
R115	7030005090	S.RES ERJ2GEJ 104 X (100 k)	T	114.4/18.4
R116	7030005090	S.RES ERJ2GEJ 104 X (100 k)	B	85.3/7.3
R118	7030006610	S.RES ERJ2GEJ 394 X (390 k)	T	89.5/11.7
R120	7030009280	S.RES ERJ2GEJ 391 X	T	30.3/34.3
R122	7030005600	S.RES ERJ2GEJ 273 X (27 k)	T	32.3/35.2
R123	7030005600	S.RES ERJ2GEJ 273 X (27 k)	T	33.5/35.2
R125	7030004970	S.RES ERJ2GEJ 470 X (47)	T	35/34
R127	7030005050	S.RES ERJ2GEJ 103 X (10 k)	B	79.1/18.3
R128	7030008290	S.RES ERJ2GEJ 183 X (18 k)	T	112.1/45.1
R129	7030005040	S.RES ERJ2GEJ 472 X (4.7 k)	T	112.1/44.1
R130	7030005070	S.RES ERJ2GEJ 683 X (68 k)	T	104.9/43.2
R131	7030005070	S.RES ERJ2GEJ 683 X (68 k)	T	104.9/44.1
R132	7030004980	S.RES ERJ2GEJ 101 X (100)	T	114.4/17.5
R134	7030005160	S.RES ERJ2GEJ 105 X (1 M)	T	128.9/26.3
R135	7030005160	S.RES ERJ2GEJ 105 X (1 M)	T	128.9/25.3
R136	7030005160	S.RES ERJ2GEJ 105 X (1 M)	T	128.9/24.2
R139	7410001140	S.ARY EXB28V104JX	T	130.6/20.6
R140	7030011000	S.RES RR0510P-392-D (3.9 k)	T	48.1/47.2
R141	7030008340	S.RES RR0510P-182-D (1.8 k)	T	50.8/45.4
R142	7030010040	S.RES ERJ2GEJ-JPW	T	49/47.2
R143	7030011000	S.RES RR0510P-392-D (3.9 k)	T	58.7/42.2
R144	7030008340	S.RES RR0510P-182-D (1.8 k)	T	61.7/40.4
R145	7030010040	S.RES ERJ2GEJ-JPW	T	59.6/42.2
R146	7030011000	S.RES RR0510P-392-D (3.9 k)	T	71.8/45.8
R147	7030008340	S.RES RR0510P-182-D (1.8 k)	T	70/41.9
R148	7030010040	S.RES ERJ2GEJ-JPW	T	71.8/44.9
R149	7030005310	S.RES ERJ2GEJ 124 X (120 k)	T	69.1/36.3
R150	7030005240	S.RES ERJ2GEJ 473 X (47 k)	T	89.8/15.5
R151	7030005060	S.RES ERJ2GEJ 333 X (33 k)	T	91/16.1
R152	7030005090	S.RES ERJ2GEJ 104 X (100 k)	T	88.9/16.4
R153	7030007300	S.RES ERJ2GEJ 332 X (3.3 k)	T	39.9/32.2
R154	7030009530	S.RES ERJ2GEJ 470 X (47)	T	42.9/40.1
R155	7030005120	S.RES ERJ2GEJ 102 X (1 k)	T	41.7/32.4
R156	7030004970	S.RES ERJ2GEJ 470 X (47)	T	42.5/41.3
R157	7030005090	S.RES ERJ2GEJ 104 X (100 k)	B	33.7/23.6
R158	7030005240	S.RES ERJ2GEJ 473 X (47 k)	T	112.1/42.3
R159	7030005240	S.RES ERJ2GEJ 473 X (47 k)	T	112.1/40.5
R160	7030005240	S.RES ERJ2GEJ 473 X (47 k)	T	113.8/38.7
R161	7030005070	S.RES ERJ2GEJ 683 X (68 k)	T	104.9/46.8
R162	7030005240	S.RES ERJ2GEJ 473 X (47 k)	T	128.2/14.4
R163	7030005240	S.RES ERJ2GEJ 473 X (47 k)	T	128.7/16.3
R164	7030005240	S.RES ERJ2GEJ 473 X (47 k)	T	129.4/14.4
R165	7030005230	S.RES ERJ2GEJ 334 X (330 k)	T	128.7/17.8
R166	7030005230	S.RES ERJ2GEJ 334 X (330 k)	T	128.7/18.7
R167	7030005230	S.RES ERJ2GEJ 334 X (330 k)	T	129.8/16.2
R168	7030006581	S.RES ERA3YED 122V (1.2 k)	T	53.6/47.5
R169	7030007230	S.RES ERA3YED 102V (1 k)	T	63.8/42.6
R170	7030010390	S.RES ERA3YED 821V (820)	T	74.1/43.2
R171	7030005090	S.RES ERJ2GEJ 104 X (100 k)	T	56.3/46.7
R172	7030008280	S.RES ERJ2GEJ 271 X (270)	B	36.4/46.4
R173	7030007270	S.RES ERJ2GEJ 151 X (150)	B	39/31.2
R174	7030004980	S.RES ERJ2GEJ 101 X (100)	B	34.6/38.7
R175	7030004980	S.RES ERJ2GEJ 101 X (100)	B	33/38.7
R176	7030005590	S.RES ERJ2GEJ 680 X (68)	B	31.3/37.4
R177	7030005590	S.RES ERJ2GEJ 680 X (68)	B	31.3/34.9
R178	7030005240	S.RES ERJ2GEJ 473 X (47 k)	T	113.8/37.8
R179	7030008300	S.RES ERJ2GEJ 184 X (180 k)	T	117.6/34.6
R180	7030005720	S.RES ERJ2GEJ 563 X (56 k)	T	118.3/35.3
R181	7030005220	S.RES ERJ2GEJ 223 X (22 k)	T	119/36
R182	7030005120	S.RES ERJ2GEJ 102 X (1 k)	T	116.9/33.9
R183	7030005070	S.RES ERJ2GEJ 683 X (68 k)	T	103.1/46.8
R184	7030005220	S.RES ERJ2GEJ 223 X (22 k)	T	113.8/36.9
R185	7030005070	S.RES ERJ2GEJ 683 X (68 k)	B	102.3/45.6
R186	7030005160	S.RES ERJ2GEJ 105 X (1 M)	T	81.8/18.9
R187	7030005060	S.RES ERJ2GEJ 333 X (33 k)	T	80.6/17.5
R188	7030005090	S.RES ERJ2GEJ 104 X (100 k)	T	78.5/14.9
R189	7030005720	S.RES ERJ2GEJ 563 X (56 k)	T	78.5/15.8
R190	7030007350	S.RES ERJ2GEJ 393 X (39 k)	T	80.6/18.4
R191	7030004980	S.RES ERJ2GEJ 101 X (100)	T	60.5/47
R192	7030004980	S.RES ERJ2GEJ 101 X (100)	B	66.3/53.2
R193	7030005050	S.RES ERJ2GEJ 103 X (10 k)	B	66.3/45.2
R194	7030005110	S.RES ERJ2GEJ 224 X (220 k)	B	62.7/50.8
R195	7030009320	S.RES ERJ2GEJ 4R7 X (4.7)	B	55.8/50.3
R196	7030005120	S.RES ERJ2GEJ 102 X (1 k)	B	65.2/42.8
R197	7030005050	S.RES ERJ2GEJ 103 X (10 k)	B	64.7/44.5
R198	7030010090	S.RES ERJ2GEJ 180 X (18)	B	36/47.6
R199	7030008280	S.RES ERJ2GEJ 271 X (270)	B	37.3/47.6
R200	7030005050	S.RES ERJ2GEJ 103 X (10 k)	B	8.4/20.6
R201	7410001130	S.ARY EXB28V102JX	B	117/51.7
R202	7030005090	S.RES ERJ2GEJ 104 X (100 k)	B	122.5/44.8
R203	7030005120	S.RES ERJ2GEJ 102 X (1 k)	B	127.4/47.3
R204	7410000750	S.ARY EXB-V4V 104JV (100 k)	B	129.6/42.7
R205	7030008010	S.RES ERJ2GEJ 123 X (12 k)	T	127.5/40.1
R206	7030005120	S.RES ERJ2GEJ 102 X (1 k)	B	127/39.5
R207	7030005050	S.RES ERJ2GEJ 103 X (10 k)	T	120.9/37.5
R208	7030005050	S.RES ERJ2GEJ 103 X (10 k)	T	121.6/38.2
R209	7410001130	S.ARY EXB28V102JX	B	125.8/40.8
R210	7030008010	S.RES ERJ2GEJ 123 X (12 k)	T	124.2/38.4
R211	7030008010	S.RES ERJ2GEJ 123 X (12 k)	T	125.9/41.1
R212	7030005160	S.RES ERJ2GEJ 105 X (1 M)	T	122.1/41.1
R213	7030005090	S.RES ERJ2GEJ 104 X (100 k)	B	55.3/51.8
R214	7030004980	S.RES ERJ2GEJ 101 X (100)	B	56.4/54
R215	7030005050	S.RES ERJ2GEJ 103 X (10 k)	B	63.5/61.3
R216	7030005590	S.RES ERJ2GEJ 680 X (68)	B	61.9/62.3

M.=Mounted side (T: Mounted on the Top side, B: Mounted on the Bottom side)
S.=Surface mount

[MAIN UNIT] (Other than "MDC compatible")

REF NO.	ORDER NO.	DESCRIPTION	M.	H/V LOCATION
R218	7030010040	S.RES ERJ2GEJ-JPW	B	56.4/51.8
R219	7030005050	S.RES ERJ2GEJ 103 X (10 k)	B	46/49.8
R220	7030005040	S.RES ERJ2GEJ 472 X (4.7 k)	B	49.3/52
R221	7030005050	S.RES ERJ2GEJ 103 X (10 k)	B	44.4/49.8
R222	7030005090	S.RES ERJ2GEJ 104 X (100 k)	B	17.7/33.9
R223	7030005090	S.RES ERJ2GEJ 104 X (100 k)	B	16.2/33.9
R224	7030005050	S.RES ERJ2GEJ 103 X (10 k)	B	15.7/32.7
R225	7030005000	S.RES ERJ2GEJ 471 X (470)	B	8/19.2
R226	7030004980	S.RES ERJ2GEJ 101 X (100)	T	109.7/53.5
R227	7030005090	S.RES ERJ2GEJ 104 X (100 k)	B	107.1/49.3
R228	7410001140	S.ARY EXB28V104JX	T	103.3/49
R230	7030005050	S.RES ERJ2GEJ 103 X (10 k)	B	124.7/42.7
R232	7030005530	S.RES ERJ2GEJ 100 X (10)	T	120.4/41.1
R233	7410000750	S.ARY EXB-V4V 104JV (100 k)	T	130/34.7
R234	7410001130	S.ARY EXB28V102JX	B	129.4/34.4
R236	7030009530	S.RES ERJ2GEJ 270 X (27)	B	63.9/71.5
R237	7030005040	S.RES ERJ2GEJ 472 X (4.7 k)	B	65.3/69.7
R238	7030008010	S.RES ERJ2GEJ 123 X (12 k)	B	61.9/65.1
R240	7030005570	S.RES ERJ2GEJ 820 X (82)	B	62.4/67.4
R241	7030004980	S.RES ERJ2GEJ 101 X (100)	B	58.5/66
R242	7030004970	S.RES ERJ2GEJ 470 X (47)	T	12/33.1
R243	7030009320	S.RES ERJ2GEJ 4R7 X (4.7)	T	10/36
R244	7030005000	S.RES ERJ2GEJ 471 X (470)	B	15.1/36.3
R245	7030005530	S.RES ERJ2GEJ 100 X (10)	B	11.9/39.9
R246	7030005090	S.RES ERJ2GEJ 104 X (100 k)	B	7.5/38.6
R247	7030004990	S.RES ERJ2GEJ 221 X (220)	B	7.7/36.3
R248	7410001130	S.ARY EXB28V102JX	B	103.9/47.9
R249	7410001130	S.ARY EXB28V102JX	B	123.9/27.6
R250	7410001130	S.ARY EXB28V102JX	B	122.1/25.7
R251	7410001140	S.ARY EXB28V104JX	T	124.7/28.7
R252	7410001140	S.ARY EXB28V104JX	T	122.1/25.7
R253	7030005720	S.RES ERJ2GEJ 563 X (56 k)	T	9.5/40.5
R254	7030005050	S.RES ERJ2GEJ 103 X (10 k)	T	7.4/42.2
R255	7030005310	S.RES ERJ2GEJ 124 X (120 k)	B	6.6/38.6
R256	7030006610	S.RES ERJ2GEJ 394 X (390 k)	T	13/41
R257	7030005040	S.RES ERJ2GEJ 472 X (4.7 k)	T	9/42.2
R258	7030005170	S.RES ERJ2GEJ 474 X (470 k)	T	11/44.5
R259	7030005090	S.RES ERJ2GEJ 104 X (100 k)	B	6/45.1
R260	7030005090	S.RES ERJ2GEJ 104 X (100 k)	B	6/47
R261	7410001130	S.ARY EXB28V102JX	B	99.7/43.5
R262	7410001130	S.ARY EXB28V102JX	T	100.2/37.4
R263	7410001130	S.ARY EXB28V102JX	B	97/40.7
R264	7410001140	S.ARY EXB28V104JX	T	103.8/37
R265	7030005050	S.RES ERJ2GEJ 103 X (10 k)	T	103.8/39.2
R266	7410001130	S.ARY EXB28V102JX	B	120.1/23.5
R267	7410001130	S.ARY EXB28V102JX	B	118.3/21.7
R268	7410001130	S.ARY EXB28V102JX	B	116.5/19.9
R269	7030005090	S.RES ERJ2GEJ 104 X (100 k)	T	119.4/20.8
R271	7030004980	S.RES ERJ2GEJ 101 X (100)	T	77.6/78.5
R272	7030007280	S.RES ERJ2GEJ 331 X (330)	T	61/76.5
R273	7030005050	S.RES ERJ2GEJ 103 X (10 k)	T	62.3/76.1
R274	7030004980	S.RES ERJ2GEJ 101 X (100)	T	56.7/69.3
R275	7030005030	S.RES ERJ2GEJ 152 X (1.5 k)	T	64.8/73.8
R276	7030005040	S.RES ERJ2GEJ 472 X (4.7 k)		
		[EXP-01], [EUR-01] only	T	65.8/73.8
	7030007300	S.RES ERJ2GEJ 332 X (3.3 k)		
		[USA-01] only	T	65.8/73.8
R277	7030005050	S.RES ERJ2GEJ 103 X (10 k)	B	4.8/45.6
R278	7030005050	S.RES ERJ2GEJ 103 X (10 k)	T	132.2/29.9
R279	7030005090	S.RES ERJ2GEJ 104 X (100 k)	T	131.3/29.9
R280	7410001130	S.ARY EXB28V102JX	B	95.2/38.9
R281	7030005090	S.RES ERJ2GEJ 104 X (100 k)	T	93.7/48.8
R282	7410000750	S.ARY EXB-V4V 104JV (100 k)	T	97.2/45.3
R283	7410001130	S.ARY EXB28V102JX	T	103.1/21.7
R284	7030005120	S.RES ERJ2GEJ 102 X (1 k)	T	111.2/25.1
R285	7410001130	S.ARY EXB28V102JX	B	107.1/19.9
R286	7410001140	S.ARY EXB28V104JX	T	121.7/22.2
R287	7030004990	S.RES ERJ2GEJ 221 X (220)		
		[EXP-01], [EUR-01] only	T	55.7/72.6
	7030005580	S.RES ERJ2GEJ 560 X (56)		
		[USA-01] only	T	55.7/72.6
R288	7030005100	S.RES ERJ2GEJ 154 X (150 k)	T	54.1/68.2
R289	7030005170	S.RES ERJ2GEJ 474 X (470 k)		
		[USA-01] only	B	38/63.7
R290	7520000260	S.POS PRF18BB471QB1RB		
		[USA-01] only	T	33.9/63
R291	7030005120	S.RES ERJ2GEJ 102 X (1 k)	T	109.2/24.5
R292	7030006070	S.RES ERJ12YJ101U (100)	B	43.6/66.1
R293	7030005120	S.RES ERJ2GEJ 102 X (1 k)	T	50.6/70.5
R294	7030005050	S.RES ERJ2GEJ 103 X (10 k)	T	51.7/68.2
R295	7030008290	S.RES ERJ2GEJ 183 X (18 k)	T	50.6/71.4
R296	7030005040	S.RES ERJ2GEJ 472 X (4.7 k)	T	53.8/64.2
R297	7030008010	S.RES ERJ2GEJ 123 X (12 k)	T	50.5/68.6
R298	7030005090	S.RES ERJ2GEJ 104 X (100 k)	T	45.6/69.9
R300	7030005050	S.RES ERJ2GEJ 103 X (10 k)	B	99.9/59.6
R301	7030007290	S.RES ERJ2GEJ 222 X (2.2 k)	T	106.2/55.6
R302	7030000480	S.RES MCR10EZHJ 6.8 k	T	79/64.4
R303	7030000480	S.RES MCR10EZHJ 6.8 k	T	80.9/64.4
R304	7030000440	S.RES MCR10EZHJ 3.3 k	T	82.8/64.4
R305	7030005050	S.RES ERJ2GEJ 103 X (10 k)	T	40.3/19.4
R306	7030005040	S.RES ERJ2GEJ 472 X (4.7 k)	T	41/21.7
R307	7030005050	S.RES ERJ2GEJ 103 X (10 k)	B	27/63
R309	7030005070	S.RES ERJ2GEJ 683 X (68 k)	T	89.9/7.2
R310	7030004980	S.RES ERJ2GEJ 101 X (100)	B	109.3/62.8
R311	7030000220	S.RES MCR10EZHJ 47 (470)	B	15/76.9
R312	7030005700	S.RES ERJ2GEJ 274 X (270 k)	B	31.5/62.4
R313	7030003370	S.RES ERJ3GEYJ 271 V (270)	B	8.6/54
R314	7030005600	S.RES ERJ2GEJ 273 X (27 k)	B	3/53
R315	7030000220	S.RES MCR10EZHJ 47 (470)	B	3.5/57.4
R316	7030005170	S.RES ERJ2GEJ 474 X (470 k)	T	90.8/11.3
R317	7030005160	S.RES ERJ2GEJ 105 X (1 M)	B	108.3/83.7
R318	7030005160	S.RES ERJ2GEJ 105 X (1 M)	B	112.5/82.7
R319	7030005120	S.RES ERJ2GEJ 102 X (1 k)	B	112.1/81.5
R320	7030005160	S.RES ERJ2GEJ 105 X (1 M)	B	107.2/82.4

[MAIN UNIT] (Other than "MDC compatible")

REF NO.	ORDER NO.	DESCRIPTION	M.	H/V LOCATION
R321	7030004970	S.RES ERJ2GEJ 470 X (47)	B	108.4/82
R322	7030005600	S.RES ERJ2GEJ 273 X (27 k)	B	2.1/79.2
R323	7030003370	S.RES ERJ3GEYJ 271 V (270)	B	6.3/78.7
R324	7030000620	S.RES MCR10EZHJ 100 k	B	5.6/85.5
R325	7030005050	S.RES ERJ2GEJ 103 X (10 k)	B	130.5/45.2
R326	7030005090	S.RES ERJ2GEJ 104 X (100 k)	B	131.8/51.7
R327	7030007290	S.RES ERJ2GEJ 222 X (2.2 k)	B	131.1/54.2
R328	7030005090	S.RES ERJ2GEJ 104 X (100 k)	B	134.2/51.7
R332	7030005090	S.RES ERJ2GEJ 104 X (100 k)	T	109.6/27.9
R333	7030005120	S.RES ERJ2GEJ 102 X (1 k)	T	109.6/26.9
R334	7030000100	S.RES MCR10EZHJ 4.7 (4R7)	T	101.4/79.7
R335	7030005050	S.RES ERJ2GEJ 103 X (10 k)	T	101.8/83.9
R336	7030005120	S.RES ERJ2GEJ 102 X (1 k)	T	111.3/78.5
R337	7410001130	S.ARY EXB28V102JX	T	104.6/75.9
R338	7030005651	S.RES ERA3YKD 304V (300 k)	T	113.6/54.3
R339	7030005871	S.RES ERA3YKD 104V (100 k)	T	113.6/52.9
R340	7030003560	S.RES ERJ3GEYJ 103 V (10 k)	T	136.3/65.7
R341	7030003560	S.RES ERJ3GEYJ 103 V (10 k)	B	130.7/85.9
R342	7030005090	S.RES ERJ2GEJ 104 X (100 k)	B	135.4/52.2
R343	7030007290	S.RES ERJ2GEJ 222 X (2.2 k)	B	138.2/49.4
R344	7030005110	S.RES ERJ2GEJ 224 X (220 k)	B	133.3/54.6
R345	7030005110	S.RES ERJ2GEJ 224 X (220 k)	B	133.3/56.3
R346	7030008410	S.RES ERJ2GEJ 392 X (3.9 k)	B	137/52.2
R347	7030005050	S.RES ERJ2GEJ 103 X (10 k)	B	137.8/53.7
R348	7030005700	S.RES ERJ2GEJ 274 X (270 k)	B	129.1/77.2
R349	7030005090	S.RES ERJ2GEJ 104 X (100 k)	B	127.8/77.7
R350	7030005120	S.RES ERJ2GEJ 102 X (1 k)	B	139.1/47.8
R351	7030004980	S.RES ERJ2GEJ 101 X (100)	B	136.3/38.1
R352	7030008300	S.RES ERJ2GEJ 184 X (180 k)	B	139.7/39
R353	7030005230	S.RES ERJ2GEJ 334 X (330 k)	B	138.2/47.8
R354	7030010040	S.RES ERJ2GEJ-JPW	T	140.4/36
R355	7030008280	S.RES ERJ2GEJ 271 X (270)	B	139.7/34.3
R356	7540000290	ABS ERZV10D220		
R359	7030005090	S.RES ERJ2GEJ 104 X (100 k)	B	114.8/82.9
R360	7030005090	S.RES ERJ2GEJ 104 X (100 k)	T	80.6/5.3
R361	7030005600	S.RES ERJ2GEJ 273 X (27 k)	T	78.4/5.3
R362	7030005050	S.RES ERJ2GEJ 103 X (10 k)	T	124.8/50.2
R363	7030005120	S.RES ERJ2GEJ 102 X (1 k)	T	42.9/38.3
R364	7030009140	S.RES ERJ2GEJ 272 X (2.7 k)	T	42.9/37.4
R365	7030004970	S.RES ERJ2GEJ 470 X (47)	T	38.3/37.9
R366	7030005050	S.RES ERJ2GEJ 103 X (10 k)	B	131.4/63.4
R367	7030005000	S.RES ERJ2GEJ 471 X (470)	B	130.1/63
R368	7030005050	S.RES ERJ2GEJ 103 X (10 k)	T	78.3/7.6
R370	7030005010	S.RES ERJ2GEJ 681 X (680)	T	71.2/70.4
R371	7030005050	S.RES ERJ2GEJ 103 X (10 k)	T	119.5/84.6
R372	7030005040	S.RES ERJ2GEJ 472 X (4.7 k)	T	25.9/8.1
R373	7030005040	S.RES ERJ2GEJ 472 X (4.7 k)	T	74/21.6
R375	7030005030	S.RES ERJ2GEJ 152 X (1.5 k)	T	27.6/5.3
R376	7030005160	S.RES ERJ2GEJ 105 X (1 M)	B	109.1/12.1
R377	7030005160	S.RES ERJ2GEJ 105 X (1 M)	B	110.9/12.1
R378	7410001140	S.ARY EXB28V104JX	B	100.7/18.3
R379	7030005090	S.RES ERJ2GEJ 104 X (100 k)	T	111.6/23.8
R386	7030005120	S.RES ERJ2GEJ 102 X (1 k)	T	105.8/85.1
R387	7030005120	S.RES ERJ2GEJ 102 X (1 k)	T	107.8/85.1
R389	7030005090	S.RES ERJ2GEJ 104 X (100 k)	T	110.4/10.7
C1	4030017420	S.CER ECJ0EC1H470J	T	88.9/54.3
C2	4030017420	S.CER ECJ0EC1H470J	T	89.9/54.3
C3	4030017420	S.CER ECJ0EC1H470J	T	41.5/15.4
C4	4030017420	S.CER ECJ0EC1H470J	B	50/15
C5	4030017460	S.CER ECJ0EB1E102K	T	89.4/34
C6	4550007080	S.TAN TEESVA 1C 106M8R	T	80.8/55.1
C7	4030017420	S.CER ECJ0EC1H470J	T	84/18.4
C8	4030017420	S.CER ECJ0EC1H470J	T	89.9/52
C9	4030016930	S.CER ECJ0EB1A104K	T	88.9/52
C10	4030016930	S.CER ECJ0EB1A104K	T	80.6/50.7
C11	4030016930	S.CER ECJ0EB1A104K	T	10.9/18.8
C12	4030016930	S.CER ECJ0EB1A104K	T	8.5/7.4
C13	4030016930	S.CER ECJ0EB1A104K	T	85.6/10
C14	4030016930	S.CER ECJ0EB1A104K	T	86.6/10
C15	4030017460	S.CER ECJ0EB1E102K	T	41.5/7.7
C16	4550000460	S.TAN TEESVA 1C 105M8R	T	42.7/6.2
C17	4550000460	S.TAN TEESVA 1C 105M8R	B	42.7/6.2
C18	4030017420	S.CER ECJ0EC1H470J	T	41.5/14.5
C19	4030017420	S.CER ECJ0EC1H470J	B	50/15.9
C20	4030016970	S.CER ECJ0EB1C223K	B	100.9/52.3
C21	4030017420	S.CER ECJ0EC1H470J	T	41.5/13.5
C22	4030017420	S.CER ECJ0EC1H470J	T	41.5/12.6
C23	4030016930	S.CER ECJ0EB1A104K	T	51.8/5.6
C24	4030017420	S.CER ECJ0EC1H470J	B	39.8/9.8
C25	4030017420	S.CER ECJ0EC1H470J	T	61.4/6
C26	4030016930	S.CER ECJ0EB1A104K	B	37.2/5.8
C27	4030017760	S.CER ECJ0EB1H222K	B	36.3/7.5
C28	4030016790	S.CER ECJ0EB1C103K	T	79.3/7.6
C29	4030017460	S.CER ECJ0EB1E102K	T	79/13.6
C30	4030016930	S.CER ECJ0EB1A104K	T	78.1/13.6
C31	4030017460	S.CER ECJ0EB1E102K	T	80.6/51.7
C32	4030017500	S.CER ECJ0EC1H560J	B	33.3/15.9
C33	4030016930	S.CER ECJ0EB1A104K	B	34.8/12.8
C34	4030017570	S.CER ECJ0EC1H040B	B	32.1/15.4
C35	4030017590	S.CER ECJ0EC1H070C	B	30.9/15.9
C36	4030016930	S.CER ECJ0EB1A104K	T	22.4/14.9
C37	4030017360	S.CER ECJ0EC1H030B	B	28.3/15.4
C38	4030016930	S.CER ECJ0EB1A104K	T	22/6.2
C39	4030016930	S.CER ECJ0EB1A104K	B	13.6/6.2
C40	4030016930	S.CER ECJ0EB1A104K	T	23.8/6.2
C41	4030016930	S.CER ECJ0EB1A104K	T	22/12.5
C42	4030016930	S.CER ECJ0EB1A104K	T	23/12.5
C43	4030017430	S.CER ECJ0EC1H101J	T	26.4/9.4
C44	4030017430	S.CER ECJ0EC1H101J	T	25.5/9.4
C45	4030017790	S.CER ECJ0EB1E682K	B	91.7/10
C46	4030016930	S.CER ECJ0EB1A104K	B	93.8/10
C47	4030016970	S.CER ECJ0EB1C223K	T	92.1/15.1

M.=Mounted side (T: Mounted on the Top side, B: Mounted on the Bottom side)
S.=Surface mount

[MAIN UNIT] (Other than "MDC compatible")

REF NO.	ORDER NO.	DESCRIPTION	M.	H/V LOCATION
C48	4030017710	S.CER ECJ0EC1H181J	B	49.7/9.1
C49	4550007080	S.TAN TEESVA 1C 106M8R	T	52.1/15.4
C50	4030017460	S.CER ECJ0EB1E102K	T	54.3/12
C51	4030017400	S.CER ECJ0EC1H220J	T	47.8/19
C52	4030017400	S.CER ECJ0EC1H220J	T	44.7/7.8
C53	4030017900	S.CER ECJ0EB1C123K	T	59.1/10.6
C54	4030018080	S.CER ECJ0EB1H182K	T	59.1/11.5
C55	4030016790	S.CER ECJ0EB1C103K	T	64.5/57
C56	4030017620	S.CER ECJ0EC1H100C	T	87.7/35.5
C57	4030016930	S.CER ECJ0EB1A104K	T	80.1/36.7
C58	4030017430	S.CER ECJ0EC1H101J	T	85.2/38.6
C59	4030017460	S.CER ECJ0EB1E102K	T	81.8/24.3
C60	4030017420	S.CER ECJ0EC1H470J	T	82.9/41.5
C63	4030017620	S.CER ECJ0EC1H100C	T	84/39.1
C64	4030017780	S.CER ECJ0EB1E472K	T	81.3/41.3
C65	4030017460	S.CER ECJ0EB1E102K	T	27.6/10.6
C66	4550006050	S.TAN TEESVA 0J 106M8R	T	31.1/6.8
C67	4030017460	S.CER ECJ0EB1E102K	T	27.6/7.1
C68	4030017460	S.CER ECJ0EB1E102K	T	30.5/9
C69	4030017460	S.CER ECJ0EB1E102K	T	32.6/15.4
C70	4030017420	S.CER ECJ0EC1H470J	B	28.3/13.4
C71	4030016940	S.CER ECJ0EB1A393K	B	91.7/8.3
C72	4030018860	S.CER ECJ0EB0J105K	B	50.7/11
C73	4030017750	S.CER ECJ0EB1E122K	B	51.3/16.6
C74	4030016930	S.CER ECJ0EB1A104K	B	52.3/16.6
C75	4030016930	S.CER ECJ0EB1A104K	B	56.2/12.6
C77	4030017460	S.CER ECJ0EB1E102K	B	54.2/16.6
C78	4030017460	S.CER ECJ0EB1E102K	B	53.7/9
C79	4550007080	S.TAN TEESVA 1C 106M8R	T	66.5/55.3
C80	4030017780	S.CER ECJ0EB1E472K	B	79.2/35
C81	4550000460	S.TAN TEESVA 1C 105M8R	B	82.2/36.4
C82	4030017460	S.CER ECJ0EB1E102K	B	84.1/26.9
C83	4550000460	S.TAN TEESVA 1C 105M8R	B	84/32.5
C84	4030017460	S.CER ECJ0EB1E102K	T	78.2/48.8
C85	4030017380	S.CER ECJ0EC1H050B	B	77.1/47.2
C86	4030017350	S.CER ECJ0EC1H020B	B	74.8/48.3
C87	4030017580	S.CER ECJ0EC1H060C	B	73.7/48.3
C88	4030017380	S.CER ECJ0EC1H050B	B	72.4/48.6
C89	4030017580	S.CER ECJ0EC1H060C	B	71.1/49.1
C90	4030017350	S.CER ECJ0EC1H020B	B	70/49.1
C91	4030016790	S.CER ECJ0EB1C103K	T	27.3/17.3
C92	4030017460	S.CER ECJ0EB1E102K	T	25.2/22.4
C93	4030017680	S.CER ECJ0EC1H820J	T	32.6/12.6
C94	4030017460	S.CER ECJ0EB1E102K	B	27.8/12.5
C95	4030016790	S.CER ECJ0EB1C103K	T	28.9/20.1
C96	4030016930	S.CER ECJ0EB1A104K	B	32.8/8.1
C97	4030016930	S.CER ECJ0EB1A104K	B	29.6/9
C98	4030016930	S.CER ECJ0EB1A104K	B	89.3/7.3
C99	4030016930	S.CER ECJ0EB1A104K	B	90.7/14.8
C100	4030016930	S.CER ECJ0EB1A104K	T	87.3/14.3
C101	4030017710	S.CER ECJ0EC1H181J	T	83.9/7.2
C102	4030016930	S.CER ECJ0EB1A104K	T	108/32.8
C103	4030016930	S.CER ECJ0EB1A104K	B	55.3/19.3
C104	4550003250	S.TAN TEESVA 1V 474M8R	B	67.2/24.2
C105	4030017420	S.CER ECJ0EC1H470J	T	49.2/29.4
C106	4030017460	S.CER ECJ0EB1E102K	B	78/29.1
C107	4030016930	S.CER ECJ0EB1A104K	B	54.2/28.8
C109	4550006480	S.TAN TEESVA 1C 475M8R	B	56.1/27.7
C110	4030017420	S.CER ECJ0EC1H470J	T	60.1/27
C111	4030016930	S.CER ECJ0EB1A104K	B	66.3/30.3
C112	4030017460	S.CER ECJ0EB1E102K	B	67.4/30.3
C113	4030017420	S.CER ECJ0EC1H470J	T	72.1/26.6
C114	4030016790	S.CER ECJ0EB1C103K	T	24.3/22.4
C115	4030016790	S.CER ECJ0EB1C103K	T	23/21.2
C116	4030016790	S.CER ECJ0EB1C103K	T	28.5/22.6
C118	4030017640	S.CER ECJ0EC1H150J	T	20.5/28.7
C120	4030016790	S.CER ECJ0EB1C103K	T	32.6/22.5
C121	4030017570	S.CER ECJ0EC1H040B	T	34.8/23.5
C122	4030017390	S.CER ECJ0EC1H180J	T	39.8/28.9
C124	4030016930	S.CER ECJ0EB1A104K	B	90.3/18.9
C125	4030017460	S.CER ECJ0EB1E102K	B	128.5/52.6
C126	4030016930	S.CER ECJ0EB1A104K	T	79.6/20.6
C127	4030016930	S.CER ECJ0EB1A104K	B	82.8/20.1
C128	4030016930	S.CER ECJ0EB1A104K	T	78.4/19.3
C129	4030016930	S.CER ECJ0EB1A104K	B	63.7/16.4
C130	4030016930	S.CER ECJ0EB1A104K	B	135.6/25.4
C131	4030017660	S.CER ECJ0EC1H330J	T	135.9/25.7
C132	4030017660	S.CER ECJ0EC1H330J	T	135.9/18
C133	4030018010	S.CER ECJ0EC1H360J [EXP-01], [EUR-01] only	T	48.1/35.5
C134	4030017640	S.CER ECJ0EC1H150J	T	49.4/34.8
C135	4030017660	S.CER ECJ0EC1H330J	T	64.1/32.5
C136	4030017340	S.CER ECJ0EC1H010B	T	71.1/30.8
C137	4030017570	S.CER ECJ0EC1H040B	T	71.1/29.9
C138	4030017730	S.CER ECJ0EB1E471K	T	71.9/33
C139	4030017390	S.CER ECJ0EC1H120J	T	62.1/32
C140	4030017360	S.CER ECJ0EC1H030B	T	72.5/30.7
C141	4030017360	S.CER ECJ0EC1H030B	T	72.1/29
C142	4030018860	S.CER ECJ0EB0J105K	T	89.5/12.7
C143	4030017400	S.CER ECJ0EC1H220J	T	71.3/36.6
C145	4030016790	S.CER ECJ0EB1C103K	T	31.4/35.2
C147	4030016790	S.CER ECJ0EB1C103K	T	34.5/35.2
C148	4030016790	S.CER ECJ0EB1C103K	T	30.9/26.4
C149	4030016930	S.CER ECJ0EB1A104K	B	78.2/17.4
C150	4030018560	S.CER C2012 JB 1A 475K-T	B	86.9/19.8
C151	4030016930	S.CER ECJ0EB1A104K	T	112.1/46
C152	4030016930	S.CER ECJ0EB1A104K	T	109.6/34.3
C153	4030017460	S.CER ECJ0EB1E102K	T	111.4/34.3
C154	4030018860	S.CER ECJ0EB0J105K	T	82.7/19.8
C155	4030017420	S.CER ECJ0EC1H470J	T	110.3/38.7
C156	4030017910	S.CER ECJ0EB1H152K	T	104.9/42.3
C157	4030017420	S.CER ECJ0EC1H470J	T	110.8/48.6
C158	4030017430	S.CER ECJ0EC1H101J	T	110.3/37.8
C159	4030017460	S.CER ECJ0EB1E102K	T	120.3/5.5

[MAIN UNIT] (Other than "MDC compatible")

REF NO.	ORDER NO.	DESCRIPTION	M.	H/V LOCATION
C160	4030017460	S.CER ECJ0EB1E102K	B	130.6/25.4
C161	4030018010	S.CER ECJ0EC1H360J [EXP-01], [EUR-01] only	T	50.8/43.8
C162	4030017590	S.CER ECJ0EC1H070C [EXP-01], [EUR-01] only	T	52.1/43.4
C163	4030017660	S.CER ECJ0EC1H270J	T	58.7/39.4
C164	4030017660	S.CER ECJ0EC1H390J [USA-01] only	T	48.6/45.8
C165	4030017660	S.CER ECJ0EC1H330J	T	49.9/45.4
C166	4030017580	S.CER ECJ0EC1H060C	T	60.1/38.9
C167	4030017420	S.CER ECJ0EC1H470J	T	70/38.9
C168	4030017660	S.CER ECJ0EC1H330J	T	59.1/40.8
C169	4030017660	S.CER ECJ0EC1H390J	T	60.7/40.4
C170	4030017550	S.CER ECJ0EC1H1R5B	T	70.4/36.6
C171	4030017570	S.CER ECJ0EC1H040B	T	70/37.9
C172	4030017400	S.CER ECJ0EC1H220J	T	70/42.9
C173	4030017400	S.CER ECJ0EC1H220J	T	70/43.9
C174	4030017640	S.CER ECJ0EC1H150J	T	38.3/38.8
C175	4030016790	S.CER ECJ0EB1C103K	B	41.4/39.4
C176	4030016930	S.CER ECJ0EB1A104K	B	41/33.2
C177	4030017730	S.CER ECJ0EB1E471K	B	41/32.2
C178	4030016790	S.CER ECJ0EB1C103K	B	34.5/33
C180	4030017740	S.CER ECJ0EB1E821K	T	109.2/48.6
C181	4030016930	S.CER ECJ0EB1A104K	T	112.1/43.2
C182	4030016780	S.CER ECJ0EB1C153K	T	112.1/39.6
C183	4030017420	S.CER ECJ0EC1H470J	T	104.9/45
C184	4030017760	S.CER ECJ0EB1H222K	T	104.9/45.9
C185	4030017690	S.CER ECJ0EC1H121J	T	107.8/48.6
C186	4030016790	S.CER ECJ0EB1C103K	T	51.7/45.4
C187	4030017460	S.CER ECJ0EB1E102K	T	52.6/45.4
C188	4030016790	S.CER ECJ0EB1C103K	T	62.7/40.4
C189	4030017460	S.CER ECJ0EB1E102K	T	63.7/40.4
C190	4030017540	S.CER ECJ0EC1HR75B	T	55/48.3
C191	4030016790	S.CER ECJ0EB1C103K	T	70/40.9
C192	4030017540	S.CER ECJ0EC1HR75B	T	57.7/43
C193	4030017460	S.CER ECJ0EB1E102K	T	70/39.9
C194	4030017530	S.CER ECJ0EC1H0R5B	T	60/44.4
C195	4030016930	S.CER ECJ0EB1A104K	B	39/30
C196	4030017730	S.CER ECJ0EB1E471K	B	38.1/33.2
C197	4030016930	S.CER ECJ0EB1A104K	B	38.1/32.2
C198	4030017730	S.CER ECJ0EB1E471K	B	31.3/38.3
C199	4030016930	S.CER ECJ0EB1A104K	B	31.3/39.2
C200	4030016930	S.CER ECJ0EB1A104K	B	31.3/34
C201	4030017730	S.CER ECJ0EB1E471K	B	31.3/33.1
C202	4030017460	S.CER ECJ0EB1E102K	T	112.1/38.7
C203	4030017460	S.CER ECJ0EB1E102K	B	100.9/47
C205	4030018900	S.CER ECJ0EB0J474K	T	78.4/18.4
C206	4030016930	S.CER ECJ0EB1A104K	T	78.5/16.7
C207	4030017730	S.CER ECJ0EB1E471K	T	61/45.7
C208	4030017460	S.CER ECJ0EB1E102K	T	60/45.7
C209	4030017460	S.CER ECJ0EB1E102K	B	65/52.7
C210	4030017590	S.CER ECJ0EC1H070C	B	57.6/50.3
C211	4030017620	S.CER ECJ0EC1H100C	B	60/51.4
C212	4030017460	S.CER ECJ0EB1E102K	B	63.8/50.8
C214	4030017460	S.CER ECJ0EB1E102K	B	66.8/41.3
C215	4030017390	S.CER ECJ0EC1H180J	B	38.5/47.6
C216	4030017660	S.CER ECJ0EC1H330J	B	43.1/47.6
C217	4030017730	S.CER ECJ0EB1E471K	B	25/32.7
C218	4030016930	S.CER ECJ0EB1A104K	B	25/31.7
C219	4030017650	S.CER ECJ0EC1H270J	B	23/36.3
C220	4030017600	S.CER ECJ0EC1H080C	B	23/38
C221	4030016930	S.CER ECJ0EB1A104K	B	5.6/23.2
C222	4030017030	S.CER ECJ0EB1A273K	B	128.6/45.3
C223	4030016930	S.CER ECJ0EB1A104K	B	126.3/48.2
C224	4030017640	S.CER ECJ0EC1H150J	T	124.2/40.1
C225	4030016790	S.CER ECJ0EB1C103K	T	124.2/37.4
C226	4030017580	S.CER ECJ0EC1H060C	T	124.2/41.1
C227	4030017460	S.CER ECJ0EB1E102K	B	57.6/53.5
C228	4030017460	S.CER ECJ0EB1E102K	B	56.4/53.1
C229	4030017620	S.CER ECJ0EC1H100C	B	52.1/53.1
C230	4030017460	S.CER ECJ0EB1E102K	B	63.5/62.3
C231	4030017360	S.CER ECJ0EC1H030B	B	66.3/52.2
C232	4030017460	S.CER ECJ0EB1E102K	B	68.6/49.5
C235	4030017460	S.CER ECJ0EB1E102K	B	44.4/50.7
C236	4030017390	S.CER ECJ0EC1H180J	B	47.8/48.1
C237	4030017620	S.CER ECJ0EC1H100C	B	47.4/49.4
C240	4030017460	S.CER ECJ0EB1E102K	B	18.9/34.4
C241	4030017360	S.CER ECJ0EC1H030B	B	17/37.7
C242	4030017460	S.CER ECJ0EB1E102K	B	15/34.4
C243	4030017460	S.CER ECJ0EB1E102K	B	18.9/33.5
C244	4030017460	S.CER ECJ0EB1E102K	B	15.7/31.7
C245	4550006780	S.TAN TEESVB2 0J 476M8R	B	5.6/18.7
C246	4030016930	S.CER ECJ0EB1A104K	B	105.1/52.2
C247	4030016930	S.CER ECJ0EB1A104K	B	107/52.9
C248	4030016930	S.CER ECJ0EB1A104K	B	108.1/52
C249	4030018900	S.CER ECJ0EB0J474K	B	121.8/47.4
C250	4030017630	S.CER ECJ0EC1H120J	T	120.4/40.1
C251	4030017400	S.CER ECJ0EC1H220J	B	61.9/64.2
C252	4030017420	S.CER ECJ0EC1H470J	B	62.6/71.1
C253	4030017730	S.CER ECJ0EB1E471K	B	61.6/71.1
C254	4030017420	S.CER ECJ0EC1H470J	B	63.9/69.5
C256	4030017460	S.CER ECJ0EB1E102K	B	59.7/65.5
C257	4030017460	S.CER ECJ0EB1E102K	B	63.4/67.4
C258	4030017460	S.CER ECJ0EB1E102K	T	13.9/32.5
C259	4030017460	S.CER ECJ0EB1E102K	T	10/35
C260	4030017590	S.CER ECJ0EC1H100C	B	14.2/36.3
C261	4030017460	S.CER ECJ0EB1E102K	B	9.5/33.9
C262	4030017460	S.CER ECJ0EB1E102K	B	13.7/37.7
C263	4030017490	S.CER C1608 JB 1A 105K-T	T	14.1/33.7
C264	4030017350	S.CER ECJ0EC1H020B	B	8.4/38.6
C265	4030017420	S.CER ECJ0EC1H470J	B	8.6/36.3
C266	4030017460	S.CER ECJ0EB1E102K	B	9.5/36.3
C267	4030017460	S.CER ECJ0EB1E102K	B	63.9/70.5
C268	4030017640	S.CER ECJ0EC1H150J	B	68.2/69.1

M.=Mounted side (T: Mounted on the Top side, B: Mounted on the Bottom side)
S.=Surface mount

[MAIN UNIT] (Other than "MDC compatible")

REF NO.	ORDER NO.	DESCRIPTION	M.	H/V LOCATION
C269	4030017390	S.CER ECJ0EC1H180J [USA-01] only	B	69.7/69.1
	4030017650	S.CER ECJ0EC1H270J [EXP-01], [EUR-01]	B	69.7/69.1
C270	4030017390	S.CER ECJ0EC1H180J	B	71.2/69
C271	4030017390	S.CER ECJ0EC1H180J [EXP-01], [EUR-01]	T	74.3/71.7
	4030017400	S.CER ECJ0EC1H220J [USA-01]	T	74.3/71.7
C272	4030016930	S.CER ECJ0EB1A104K	T	7.9/39.5
C273	4030016930	S.CER ECJ0EB1A104K	T	9.5/39.5
C274	4030017460	S.CER ECJ0EB1E102K	T	7.4/41.2
C275	4030016930	S.CER ECJ0EB1A104K	T	15/41
C276	4030017620	S.CER ECJ0EC1H100C	B	10.5/41
C277	4030017460	S.CER ECJ0EB1E102K	T	14/41
C278	4030017350	S.CER ECJ0EC1H020B	B	8.9/43.6
C279	4030017460	S.CER ECJ0EB1E102K	B	6.9/44.2
C280	4030017550	S.CER ECJ0EC1H1R5B	B	9.4/46.1
C281	4030017420	S.CER ECJ0EC1H470J	T	97.9/34.2
C282	4030017420	S.CER ECJ0EC1H470J	T	102.1/40
C283	4030017420	S.CER ECJ0EC1H470J	B	97.4/44.6
C284	4030017420	S.CER ECJ0EC1H470J	T	94.8/35.5
C285	4030017420	S.CER ECJ0EC1H470J	B	94.2/44.4
C286	4030017420	S.CER ECJ0EC1H470J	T	92.1/43.3
C287	4030017420	S.CER ECJ0EC1H470J	T	92.1/41.6
C288	4030017460	S.CER ECJ0EB1E102K	B	4.8/46.5
C290	4030017400	S.CER ECJ0EC1H220J	T	74.3/73.6
C291	4030017730	S.CER ECJ0EB1E471K	T	69.3/76.1
C292	4550000560	S.TAN TEESVA 1V 334M8R	T	67.6/74.4
C294	4030017420	S.CER ECJ0EC1H470J	T	70.4/76.1
C295	4030017420	S.CER ECJ0EC1H470J	T	56.7/67.3
C296	4510008530	S.ELE EEE1HA2R2SR	T	59.6/80
C297	4030017460	S.CER ECJ0EB1E102K	T	56.7/68.3
C299	4030017460	S.CER ECJ0EB1E102K	B	6.9/47.9
C300	4030017340	S.CER ECJ0EC1H010B	B	8.9/48.5
C301	4030017580	S.CER ECJ0EC1H060C	B	13.2/49.5
C302	4030017460	S.CER ECJ0EB1E102K	B	4.4/44.4
C303	4030016930	S.CER ECJ0EB1A104K	B	129.6/32
C304	4030017420	S.CER ECJ0EC1H470J	B	90/43.4
C305	4030011140	S.CER GRM31M2C2H120JV01L	T	27.6/78.7
C306	4030011120	S.CER GRM31M2C2H100JV01L	T	27.6/76.1
C307	4030011120	S.CER GRM31M2C2H100JV01L	T	27.7/71.8
C308	4030011070	S.CER GRM31M2C2H5R0CY21L [USA-01]	T	27.7/69.2
	4030011140	S.CER GRM31M2C2H120JV01L [EXP-01], [EUR-01]	T	27.7/69.2
C309	4030017460	S.CER ECJ0EB1E102K	T	71.5/76.1
C310	4030017420	S.CER ECJ0EC1H470J	T	43/76.1
C311	4030017460	S.CER ECJ0EB1E102K	T	44.1/76.1
C312	4030017730	S.CER ECJ0EB1E471K	T	45.3/76.1
C313	4510008680	S.ELE EEE1EA220SP	T	51.7/77.7
C314	4030017730	S.CER ECJ0EB1E471K	B	40.2/68.3
C315	4030017460	S.CER ECJ0EB1E102K	T	55.7/73.6
C316	4030016790	S.CER ECJ0EB1C103K	T	54.1/72.6
C317	4030011600	S.CER C1608 JB 1E 104K-T	T	54.1/67
C318	4030017460	S.CER ECJ0EB1E102K [USA-01] only	T	35.1/63.3
C319	4030017460	S.CER ECJ0EB1E102K [USA-01] only	T	47.3/67.4
C320	4030017580	S.CER ECJ0EC1H060C	B	15/52.7
C321	4030017460	S.CER ECJ0EB1E102K	B	14.9/49.5
C322	4030017600	S.CER ECJ0EC1H080C	B	19.3/52
C323	4030017570	S.CER ECJ0EC1H040B	B	20/49.6
C324	4030017420	S.CER ECJ0EC1H470J	B	90/41.8
C325	4030017460	S.CER ECJ0EB1E102K	T	72.5/64.9
C326	4030017420	S.CER ECJ0EC1H470J	B	46.2/64.3
C327	4030017460	S.CER ECJ0EB1E102K	B	84.2/79
C328	4030017460	S.CER ECJ0EB1E102K	B	83.2/79
C329	4030017460	S.CER ECJ0EB1E102K	B	82.1/79
C330	4030017460	S.CER ECJ0EB1E102K	B	81/79
C331	4030017460	S.CER ECJ0EB1E102K	B	80/79
C332	4030016930	S.CER ECJ0EB1A104K	T	51.9/71.9
C334	4030017460	S.CER ECJ0EB1E102K	T	49.5/68.6
C335	4030017460	S.CER ECJ0EB1E102K	T	53.8/63.2
C336	4030017580	S.CER ECJ0EC1H060C	B	20.8/52
C337	4030017390	S.CER ECJ0EC1H180J	B	25.1/51.2
C338	4510008600	S.ELE EEE1CA4R7NR	T	79.1/69.1
C339	4030017460	S.CER ECJ0EB1E102K	T	79.1/62.1
C340	4030017460	S.CER ECJ0EB1E102K	T	37.5/20.8
C341	4030016790	S.CER ECJ0EB1C103K	T	41.9/19.4
C342	4030017200	S.CER GRM31BR32J102KY01L	T	25.3/62.5
C343	4030011270	S.CER GRM31M2C2H200JV01L	T	22.1/63.9
C345	4030011170	S.CER GRM31M2C2H180JV01L	T	17.3/57.4
C346	4030011170	S.CER GRM31M2C2H180JV01L	T	30.2/62.8
C347	4030017520	S.CER ECJ0EC1H0R3B	B	25.4/63
C348	4030017460	S.CER ECJ0EB1E102K	B	31.5/63.4
C349	4030016930	S.CER ECJ0EB1A104K	T	100.5/63.5
C350	4550005980	S.TAN TEESVA 1A 475M8R	T	101.6/62
C351	4030018860	S.CER ECJ0EB0J105K [EXP-01], [EUR-01] only	T	110.6/67.4
C352	4030017460	S.CER ECJ0EB1E102K	B	124.6/59.6
C353	4550005980	S.TAN TEESVA 1A 475M8R	B	124.5/61.3
C354	4550006250	S.TAN TEESVA 1A 106M8R	B	112.9/61.7
C355	4030017420	S.CER ECJ0EC1H470J	B	112.6/60.1
C356	4030011270	S.CER GRM31M2C2H200JV01L	T	14.7/62.9
C357	4030011270	S.CER GRM31M2C2H200JV01L	T	10.4/62.9
C358	4030007030	S.CER C1608 CH 1H 150J-T	B	10.6/56.4
C359	4030011340	S.CER C1608 CH 1H 471J-T	B	9.4/56.4
C360	4030017460	S.CER ECJ0EB1E102K	B	4/53
C361	4030017460	S.CER ECJ0EB1E102K	T	103.9/53.5
C362	4030017460	S.CER ECJ0EB1E102K	T	108.2/24.5
C363	4510008540	S.ELE EEE1CA100SR	T	139.1/31.9
C365	4550007650	S.TAN F931V105MAABMA	B	106.7/65
C366	4550007650	S.TAN F931V105MAABMA	B	104.2/65
C367	4550007650	S.TAN F931V105MAABMA	B	101.6/65
C368	4550007650	S.TAN F931V105MAABMA	B	99.5/64.6
C369	4030011270	S.CER GRM31M2C2H200JV01L	T	15.8/78.9
C370	4030011270	S.CER GRM31M2C2H200JV01L	T	15.8/83.1

[MAIN UNIT] (Other than "MDC compatible")

REF NO.	ORDER NO.	DESCRIPTION	M.	H/V LOCATION
C371	4030017460	S.CER ECJ0EB1E102K	B	4.1/81.6
C372	4030006850	S.CER C1608 JB 1H 471K-T	B	8.3/77.1
C373	4030016930	S.CER ECJ0EB1A104K	B	130.9/51.7
C374	4030016930	S.CER ECJ0EB1A104K	B	133/51.3
C375	4030016930	S.CER ECJ0EB1A104K	B	132.4/54.6
C377	4030017460	S.CER ECJ0EB1E102K	T	105.9/51.9
C378	4030017460	S.CER ECJ0EB1E102K	T	108.2/78
C379	4030016930	S.CER ECJ0EB1A104K	B	108.4/80.3
C380	4030017460	S.CER ECJ0EB1E102K	B	120.5/83.2
C381	4030016790	S.CER ECJ0EB1C103K	B	135.9/70.5
C383	4030017460	S.CER ECJ0EB1E102K	B	135.9/71.5
C384	4510008870	S.ELE EEE1AA471UP	T	129.9/64.9
C386	4030016930	S.CER ECJ0EB1A104K	B	138.8/53.7
C387	4030017720	S.CER ECJ0EB1H331K	B	135.4/51.3
C388	4030018860	S.CER ECJ0EB0J105K	B	138.6/52.2
C389	4030016930	S.CER ECJ0EB1A104K	B	139.1/49.4
C390	4030016930	S.CER ECJ0EB1A104K	B	137.8/55.4
C391	4030016930	S.CER ECJ0EB1A104K	T	101.8/82.3
C392	4030017460	S.CER ECJ0EB1E102K	B	127.8/76.8
C393	4030017460	S.CER ECJ0EB1E102K	B	99/79
C394	4030017420	S.CER ECJ0EC1H470J	B	115.4/68
C395	4030017460	S.CER ECJ0EB1E102K	B	126.5/77.1
C397	4030017460	S.CER ECJ0EB1E102K	B	99.8/86.3
C398	4030017420	S.CER ECJ0EC1H470J	B	100.8/86.3
C399	4030018860	S.CER ECJ0EB0J105K	B	136.3/37.1
C400	4030016930	S.CER ECJ0EB1A104K	B	139.7/35.3
C411	4510008780	S.ELE EEE1EA471P	T	117.2/63.6
C412	4510008780	S.ELE EEE1EA471P	T	132.7/54.3
C413	4030018900	S.CER ECJ0EB0J474K	B	135.1/46.8
C414	4510008540	S.ELE EEE1CA100SR	T	118.7/50.5
C415	4030016930	S.CER ECJ0EB1A104K	B	103/23.8
C416	4030016930	S.CER ECJ0EB1A104K	B	120.3/51.6
C417	4030016790	S.CER ECJ0EB1C103K	B	115.6/52.8
C418	4030017460	S.CER ECJ0EB1E102K	T	109.6/54.5
C419	4030016790	S.CER ECJ0EB1C103K	T	42.9/39.2
C420	4030017500	S.CER ECJ0EC1H560J	T	41/37.4
C421	4030016930	S.CER ECJ0EB1A104K	B	36/24.7
C422	4030016790	S.CER ECJ0EB1C103K	T	43.1/31.9
C423	4030018010	S.CER ECJ0EC1H390J	T	39.9/35.3
C424	4030016930	S.CER ECJ0EB1A104K	T	38.9/32.2
C425	4030017460	S.CER ECJ0EB1E102K	B	134.8/66.1
C426	4030018860	S.CER ECJ0EB0J105K	B	110/12.1
C427	4030017460	S.CER ECJ0EB1E102K	B	109.1/10.4
C430	4030017570	S.CER ECJ0EC1H040B	T	78.2/44.8
J1	6510025220	S.CNR AXK540145J	T	124.5/9.7
J2	6510025220	S.CNR AXK540145J	T	101.5/9.7
J3	6510021301	S.CNR 52365-1071	T	90.3/62.6
J5	6510023091	S.CNR 20FLT-SM2-TB (LF) (SN)	T	108.3/81.8
J7	6450000140	CNR HSJ0807-01-010		
J10	6510023091	S.CNR 20FLT-SM2-TB (LF) (SN)	T	71/7
W1	7120000470	JMP ERDS2T0		
W2	8900016250	CBL OPC-1701 <CMI>T/H!		
EP1	6910015600	S.BEA ACZ1005Y-241 (240)	B	39.8/8.1
EP2	6910015370	S.BEA ACZ1005Y-102-T	B	50.1/12.4
EP3	6910015370	S.BEA ACZ1005Y-102-T	T	82.6/37.1
EP4	6910010280	BEA HF70BB9.5X10.4X4.9		
EP5	6910010280	BEA HF70BB9.5X10.4X4.9		
EP6	6910011560	BEA HF70BB4.5X5X1.6		

[MAIN-A UNIT] (MDC compatible)

REF NO.	ORDER NO.	DESCRIPTION		M.	H/V LOCATION
IC1	1110005340	S.IC	NJM12902V-TE1-#ZZZB	T	82.3/12.9
IC2	1110006221	S.IC	AK2346P-E2/P	B	44.7/11.7
IC3	1140013200	S.IC	CD4053BPWR	B	58.7/9.3
IC4	1130010100	S.IC	LMX2352TMX/NOPB	T	82.9/46
IC5	1110003491	S.IC	TA31136FNG (D,EL)	T	28/13.9
IC6	1190001350	S.IC	M62364FP 600D	B	84.9/12.9
IC7	1110005340	S.IC	NJM12902V-TE1-#ZZZB	T	108.5/43.7
IC8	1140013200	S.IC	CD4053BPWR	B	58.7/16.1
IC9	1130012960	S.IC	BU8872FS-E2	B	133.1/21.3
IC10	1190002051	S.IC	SPM5001-TL-E	B	33.8/36.9
IC12	1190001340	S.IC	M62334FP 600C	B	9.1/25.7
IC13	1110005771	S.IC	S-80942CNMC-G9CT2G	B	126/44.8
IC14	1140014550	S.IC	HD64F2506RFC26DV	B	111.8/35.7
IC15	1150002042	IC	RA30H1317M-121 [EXP-02], [EUR-02]		
	1150002073	IC	RA60H1317M-125 [USA-02], [F5061D]		
IC16	1140014160	S.IC	24LC1025T-I/SM	B	133.3/29
IC17	1110002751	S.IC	TA75S01F (TE85R,F)	T	54.1/70.4
IC18	1180000970	S.IC	AN78L05M-(E1)	B	113/65.3
IC19	1120002510	S.IC	DS14C232TM S	T	104.7/70.5
IC20	1180001251	S.IC	TA7808F (TE16L,Q)	B	121.5/65.8
IC21	1110003091	IC	LA4425A-E		
IC22	1110002751	S.IC	TA75S01F (TE85R,F)	B	135.5/54.4
IC23	1130006221	S.IC	TC4W53FU (TE12L,F)	B	106.9/9.6
IC25	1110006230	S.IC	NJM2711F-TE1-#ZZZB	B	26.1/6.6
Q1	1590003230	S.TR	UNR9113J-(TX)	B	15.2/6
Q3	1530002851	S.TR	2SC4116-BL (TE85R,F)	B	36.4/15.5
Q4	1590001650	S.TR	XP4601 (TX)	B	92.8/12.4
Q5	1590003290	S.TR	UNR9213J-(TX)	B	76.7/50
Q6	1530002851	S.TR	2SC4116-BL (TE85R,F)	T	63.2/55.1
Q7	1560000541	S.FET	2SK880-Y (T5RICOM,F)	B	81.2/27.1
Q8	1530002851	S.TR	2SC4116-BL (TE85R,F)	B	79.2/31.8
Q9	1530002851	S.TR	2SC4116-BL (TE85R,F)	B	81.7/31.8
Q10	1560001360	S.FET	2SK3019 TL	B	57/31.6
Q12	1530002601	S.TR	2SC4215-O (TE85R,F)	T	26.9/20
Q16	1590003290	S.TR	UNR9213J-(TX)	T	113.2/47.6
Q17	1530002920	S.TR	2SC4226-T1 R25	T	50.9/47.6
Q18	1530002920	S.TR	2SC4226-T1 R25	T	61.6/42.6
Q19	1530002920	S.TR	2SC4226-T1 R25	T	72.1/43
Q20	1590003230	S.TR	UNR9113J-(TX)	B	33.9/25.2
Q22	1530003311	S.TR	2SC5107-O (TE85R,F)	T	58.1/46.3
Q23	1590001400	S.TR	XP1214 (TX)	B	55.7/40.9
Q24	1590003280	S.TR	UNR9211J-(TX)	B	55.8/38.2
Q25	1530003311	S.TR	2SC5107-O (TE85R,F)	B	65.9/49.5
Q26	1590001400	S.TR	XP1214 (TX)	B	67.2/43.1
Q27	1590003230	S.TR	UNR9113J-(TX)	T	124.7/52
Q28	1590003290	S.TR	UNR9213J-(TX)	B	123.4/46.3
Q29	1530003311	S.TR	2SC5107-O (TE85R,F)	B	53.5/51.2
Q30	1530000372	S.TR	2SC3356-T1B R (R24)	B	65.5/66
Q31	1580000731	S.FET	3SK293 (TE85L,F)	B	10.2/38.6
Q32	1560000841	S.FET	2SK1829 (TE85R,F)	T	11/42.5
Q33	1530002851	S.TR	2SC4116-BL (TE85R,F) [USA-02], [F5061D] only	T	47.5/69.4
Q34	1590003290	S.TR	UNR9213J-(TX)	T	83/67.4
Q35	1520000460	S.TR	2SB1132 T100 R	T	100.1/57.9
Q36	1590001190	S.TR	XP6501-(TX) .AB	T	104.3/55.8
Q37	1540000550	S.TR	2SD1664 T100Q	T	75.5/63.6
Q38	1510000920	S.TR	2SA1577 T106 Q	T	39.3/21.3
Q39	1590003290	S.TR	UNR9213J-(TX)	T	42.6/21.3
Q40	1590003290	S.TR	UNR9213J-(TX)	T	104.1/51.9
Q41	1590001451	S.FET	2SJ144-GR (TE85R,F)	B	110.3/83.3
Q42	1590003290	S.TR	UNR9213J-(TX)	B	132.1/45
Q43	1590000990	S.TR	DTC363EK T146	B	135.7/49
Q44	1590003290	S.TR	UNR9213J-(TX)	T	108.5/21.6
Q45	1590003290	S.TR	UNR9213J-(TX)	B	133.3/58.9
Q46	1590003290	S.TR	UNR9213J-(TX)	T	117.9/84.4
Q47	1550000100	S.FET	2SJ377 (TE16L1,NQ)	B	131.3/71.5
Q48	1590003290	S.TR	UNR9213J-(TX)	B	127.4/78
Q49	1530002851	S.TR	2SC4116-BL (TE85R,F)	B	139.3/37.2
Q50	1530002601	S.TR	2SC4215-O (TE85R,F)	T	40.6/39.2
Q51	1590003321	S.FET	TPC6103 (TE85L,F)	B	133.6/63.4
Q52	1590003290	S.TR	UNR9213J-(TX)	B	128.2/61.1
Q53	1590000430	S.TR	DTC144EUA T106	B	52.3/67.4
Q54	1590000430	S.TR	DTC144EUA T106	T	25.5/6.3
Q55	1560001360	S.FET	2SK3019 TL	T	75.5/20.9
Q57	1590003290	S.TR	UNR9213J-(TX)	T	112/14.4
Q58	1530002851	S.TR	2SC4116-BL (TE85R,F)	B	24.9/9.5
Q59	1590003290	S.TR	UNR9213J-(TX)	B	96.6/8
Q60	1590003290	S.TR	UNR9213J-(TX)	B	97.8/11.6
D1	1750001070	S.DIO	DAN235ETL	T	10.4/15.7
D2	1750001070	S.DIO	DAN235ETL	T	22.6/8.9
D3	1790001250	S.DIO	MA2S111-(TX)	T	61.3/55
D4	1790001260	S.DIO	MA2S077-(TX)	B	72.9/49.8
D5	1790001260	S.DIO	MA2S077-(TX)	B	71.1/51.3
D6	1750001070	S.DIO	DAN235ETL	T	30.6/20.8
D7	1160000140	S.DIO	DAP222 TL	T	58.9/14
D8	1720000791	S.VCP	HVC321B1TRF-E	T	49.5/32.4
D9	1720000791	S.VCP	HVC321B1TRF-E	T	52.7/32.4
D10	1720000791	S.VCP	HVC321B1TRF-E	T	60.5/30
D11	1720000641	S.VCP	1SV284 (TPH3,F)	T	52.7/33.6
D12	1720000641	S.VCP	1SV284 (TPH3,F)	T	52.7/34.8
D13	1720000791	S.VCP	HVC321B1TRF-E	T	63.8/28.6
D14	1720000791	S.VCP	HVC321B1TRF-E	T	73.6/30.4
D15	1720000641	S.VCP	1SV284 (TPH3,F)	T	63.8/31.3
D17	1720000791	S.VCP	HVC321B1TRF-E	T	72.1/27.9
D18	1750000721	S.VCP	HVC375BTRF-E	T	69.8/33.3
D19	1160000140	S.DIO	DAP222 TL	B	120.5/17.8
D20	1720000471	S.VCP	1SV239 (TPH3,F)	T	69.4/34.9
D21	1750001070	S.DIO	DAN235ETL	T	36.3/38.3

[MAIN-A UNIT] (MDC compatible)

REF NO.	ORDER NO.	DESCRIPTION		M.	H/V LOCATION
D22	1750000520	S.DIO	DAN222TL	T	124.7/54.5
D23	1790001260	S.DIO	MA2S077-(TX)	T	125.6/39.2
D24	1790001260	S.DIO	MA2S077-(TX)	B	50.7/53.2
D25	1790001260	S.DIO	MA2S077-(TX)	B	49.3/50.8
D26	1750000711	S.VCP	HVC350BTRF-E	B	17.7/36
D27	1750000711	S.VCP	HVC350BTRF-E	B	16.2/36
D30	1750000721	S.VCP	HVC375BTRF-E	B	8.6/44.7
D31	1790001250	S.DIO	MA2S111-(TX)	T	8.5/43.7
D32	1750001080	S.DIO	RB886G T2R	T	64.1/76.5
D33	1750001080	S.DIO	RB886G T2R	T	65.8/75.8
D34	1750000721	S.VCP	HVC375BTRF-E	B	8.6/47.4
D35	1790001260	S.DIO	MA2S077-(TX)	B	17.9/48.1
D37	1750000370	S.DIO	DA221 TL	T	75.5/67.6
D38	1750000511	S.DIO	UX9401F-STD/TR [EXP-02], [EUR-02] only	T	30/66
D39	1710001061	DIO	L407CDB[USA-02], [F5061D] only		
D42	1750001360	S.DIO	L709CER (9401)	T	34.6/58.7
D45	1750000520	S.DIO	DAN222TL	T	91.8/57.5
D46	1750000520	S.DIO	DAN222TL	T	89.6/57.5
D47	1790001211	S.DIO	1SS375-TL-E	B	29.2/63.8
D48	1750000520	S.DIO	DAN222TL	B	93/61.5
D49	1790001211	S.DIO	1SS375-TL-E	B	6/52.8
D50	1750000370	S.DIO	DA221 TL	B	97.2/65.8
D51	1790001211	S.DIO	1SS375-TL-E	B	3.9/79.7
D52	1750000520	S.DIO	DAN222TL	B	132.5/41
D53	1790001250	S.DIO	MA2S111-(TX)	B	133.3/47.3
D55	1750000370	S.DIO	DA221 TL	B	108.8/57.4
D56	1750000370	S.DIO	DA221 TL	T	108.8/60.6
D57	1750000370	S.DIO	DA221 TL	B	95.1/65.8
D58	1750000520	S.DIO	DAN222TL	T	94/57.5
D59	1750000520	S.DIO	DAN222TL	B	104/80.4
D62	1790000700	DIO	DSA3A1		
D63	1750000520	S.DIO	DAN222TL	B	110.3/80.9
D65	1750000520	S.DIO	DAN222TL	B	129.7/58.9
D66	1790001621	S.DIO	1SV308 (TPL3,F)	T	33.9/38.8
D67	1790001621	S.DIO	1SV308 (TPL3,F)	T	33.9/37.5
D68	1790001621	S.DIO	1SV308 (TPL3,F)	T	29.9/23.2
D69	1790001621	S.DIO	1SV308 (TPL3,F)	T	31.2/23.2
D70	1750000351	S.DIO	1SV252 (TE85L,F)	T	73.6/75.5
D71	1730002410	S.ZEN	MA8200-H (TX)	T	118.3/86.3
D72	1750000520	S.DIO	DAN222TL	T	87.4/57.5
D73	1750000520	S.DIO	DAN222TL	B	93/64.5
FI1	2020001410	CER	CFWLB450KGFA-B0		
FI2	2020002470	S.CER	CFWKA450KHFA001-R0	T	15.4/9.3
FI3	2030000500	S.MLH	FL-401 (46.35 MHz)	T	24.7/28.4
FI4	2030000670	S.MLH	FL-420 (46.35 MHz)	T	35.6/28.4
FI5	2040001440	S.LC	NFE31PT152Z1E9L	B	94.5/77
FI6	2040001440	S.LC	NFE31PT152Z1E9L	B	94.5/73.7
FI7	2040001440	S.LC	NFE31PT152Z1E9L [USA-02], [F5061D]	B	94.5/70.3
X1	6050012380	S.XTL	CR-826 (15.3 MHz)	T	84.2/34.7
X2	6050011730	S.XTL	CR-765 (3.6864 MHz)	T	48.3/11.6
X3	6070000300	S.DCR	JTBM450CX24 <JJE>	T	37.1/10.3
X4	6050012320	S.XTL	CR-818 (4.194304 MHz)	T	139.1/21.9
X5	6050011720	S.XTL	CR-764 (19.6608 MHz)	T	120.5/44.3
L1	6200004660	S.COL	MLF1608A 1R8K-T	T	82.7/54.3
L2	6200003540	S.COL	MLF1608D R22K-T	B	34.4/14.7
L3	6200004480	S.COL	MLF1608D R82K-T	B	29.7/16.2
L4	6200007911	S.COL	ELJRF 18NJFB	B	75.9/48.3
L5	6200007120	S.COL	ELJND 1R0J	T	49.4/30.8
L6	6200007120	S.COL	ELJND 1R0J	T	52.7/30.8
L7	6200007120	S.COL	ELJND 1R0J	T	60.5/28.4
L8	6200007170	S.COL	MLF1608A 3R3K-T	T	74/27.5
L9	6200007170	S.COL	MLF1608A 3R3K-T	T	69.8/32
L10	6200010600	S.COL	C6342A-67NG-A	T	51.2/39.2
L11	6200003640	S.COL	MLF1608E 100K-T	T	48.3/33.6
L12	6200009910	S.COL	C6342A-88NG-A	T	61.6/35.5
L13	6200007120	S.COL	ELJND 1R0J	T	63.8/27
L14	6200003640	S.COL	MLF1608E 100K-T	T	60/31.4
L15	6200012450	S.COL	0.25-1.9-8TL 73N (COAT)	T	73.3/35.9
L16	6200008090	S.COL	LQW2BHN68NJ03L	T	69.5/28
L17	6200003640	S.COL	MLF1608E 100K-T	T	73.7/32.6
L18	6130003000	S.COL	#617DB-1714=P3	B	39/36.2
L19	6130003000	S.COL	#617DB-1714=P3	B	34.5/42.6
L20	6200009181	S.COL	ELJRE R10JFA	T	57.3/48.3
L21	6200007911	S.COL	ELJRF 18NJFB	B	66.3/51.2
L22	6200005721	S.COL	ELJRE 33NGFA	B	40.6/48.1
L23	6200005721	S.COL	ELJRE 33NGFA	B	45.5/48.1
L24	6130003000	S.COL	#617DB-1714=P3	B	27/36.2
L25	6200009151	S.COL	ELJRE 82NJFA	B	54.2/53.4
L26	6200010720	S.COL	C2520C-56NG-A	B	20.9/37
L27	6200009181	S.COL	ELJRE R10JFA	B	66.5/69.4
L28	6200010720	S.COL	C2520C-56NG-A	B	11.7/35.1
L29	6200009171	S.COL	ELJRE 47NJFA	B	70.5/70.8
L30	6200009171	S.COL	ELJRE 47NJFA	T	72.6/72.7
L31	6200011410	S.COL	C2520C-82NG-A	B	7.8/41.5
L32	6200011410	S.COL	C2520C-82NG-A	B	9.9/50.6
L33	6200010050	S.COL	AS080547-47N	T	33.3/73.9
L34	6200007750	S.COL	LQW2BHN56NJ03L	B	13.2/51.7
L35	6200006991	S.COL	ELJRE 56NGFA	B	20.1/50.7
L36	6200010420	S.COL	FHW1210HC 1R0JGT	B	39.2/66
L37	6200010050	S.COL	AS080547-47N	T	30/58.5
L38	6200010050	S.COL	AS080547-47N	T	21.6/58
L39	6200010050	S.COL	AS080547-47N	T	12.5/57.5
L40	6200010050	S.COL	AS080547-47N	T	10.5/81
L41	6200002861	S.COL	NLV25T-4R7J	T	122.3/54.4
L42	6200005011	S.COL	NLV25T-100J	T	40.7/42.1
L43	6200010680	S.COL	C2520C-R22G-A (0.22U)	T	42.1/34.9

M.=Mounted side (T: Mounted on the Top side, B: Mounted on the Bottom side)
S.=Surface mount

[MAIN-A UNIT] (MDC compatible)

REF NO.	ORDER NO.	DESCRIPTION	M.	H/V LOCATION
L44	6200010740	S.COL C2520C-R27G-A	T	37.8/35.3
L45	6200003960	S.COL MLF1608A 1R0K-T	T	71.3/72.7
L46	6200005661	S.COL ELJRE 10NGFA	T	78.3/42.3
L47	6200004480	S.COL MLF1608D R82K-T	T	23.3/20.9
L48	6200007750	S.COL LQW2BHN56NJ03L	B	23.9/39.8
R1	7030005060	S.RES ERJ2GEJ 333 X (33 k)	B	38.1/5.8
R2	7510001730	S.TMR ERTJOEP 473J	T	90.4/35.6
R3	7030005050	S.RES ERJ2GEJ 103 X (10 k)	T	79/11.9
R4	7030005700	S.RES ERJ2GEJ 274 X (270 k)	B	88.5/18.9
R5	7030005090	S.RES ERJ2GEJ 104 X (100 k)	T	90.4/34
R6	7030005160	S.RES ERJ2GEJ 105 X (1 M)	T	84/19.4
R7	7030005230	S.RES ERJ2GEJ 334 X (330 k)	T	84/17.5
R8	7410001130	S.ARY EXB28V102JX	T	86.1/52.4
R9	7030007570	S.RES ERJ2GEJ 122 X (1.2 k)	B	34.3/11.6
R10	7030007060	S.RES ERJ2GEJ 684X (680 k)	B	35.8/13.7
R11	7030010040	S.RES ERJ2GEJ-JPW	T	8.4/9.2
R12	7030004970	S.RES ERJ2GEJ 470 X (47)	T	31/17.2
R13	7030005600	S.RES ERJ2GEJ 273 X (27 k)	T	8.8/15.9
R14	7030005210	S.RES ERJ2GEJ 822 X (8.2 k)	T	7.5/7.4
R15	7030005070	S.RES ERJ2GEJ 683 X (68 k)	B	93.3/14.4
R17	7030007570	S.RES ERJ2GEJ 122 X (1.2 k)	B	93.3/15.3
R18	7030008300	S.RES ERJ2GEJ 184 X (180 k)	B	79/11.8
R19	7030005230	S.RES ERJ2GEJ 334 X (330 k)	T	89.3/9
R20	7030005090	S.RES ERJ2GEJ 104 X (100 k)	T	85.6/8.3
R21	7030005070	S.RES ERJ2GEJ 683 X (68 k)	T	86.6/8.3
R22	7030005050	S.RES ERJ2GEJ 103 X (10 k)	B	38.1/7.5
R23	7030005050	S.RES ERJ2GEJ 103 X (10 k)	B	38.1/9.2
R24	7030005060	S.RES ERJ2GEJ 333 X (33 k)	B	37.2/10.5
R25	7030005120	S.RES ERJ2GEJ 102 X (1 k)	B	100.9/51.4
R26	7030004980	S.RES ERJ2GEJ 101 X (100)	B	87.5/5.3
R27	7030007300	S.RES ERJ2GEJ 332 X (3.3 k)	T	53.9/5.6
R28	7030010040	S.RES ERJ2GEJ-JPW	T	59.4/5.6
R29	7030005530	S.RES ERJ2GEJ 100 X (10)	T	116.4/14.5
R30	7030005170	S.RES ERJ2GEJ 474 X (470 k)	B	37.2/9.2
R31	7030008410	S.RES ERJ2GEJ 392 X (3.9 k)	B	36.3/9.2
R32	7030007340	S.RES ERJ2GEJ 153 X (15 k)	B	37.2/7.5
R33	7030005160	S.RES ERJ2GEJ 105 X (1 M)	T	80.7/8.4
R34	7030005040	S.RES ERJ2GEJ 472 X (4.7 k)	T	80.7/7.2
R35	7030005120	S.RES ERJ2GEJ 102 X (1 k)	T	77.6/9.5
R36	7030005030	S.RES ERJ2GEJ 152 X (1.5 k)	B	27/14.7
R37	7030007300	S.RES ERJ2GEJ 332 X (3.3 k)	B	15.2/8.6
R38	7030005210	S.RES ERJ2GEJ 822 X (8.2 k)	T	22.9/6.2
R39	7030005600	S.RES ERJ2GEJ 273 X (27 k)	T	24/9.1
R40	7030005170	S.RES ERJ2GEJ 474 X (470 k)	T	25.9/10.6
R41	7030007290	S.RES ERJ2GEJ 222 X (2.2 k)	T	27.6/6.2
R42	7030005090	S.RES ERJ2GEJ 104 X (100 k)	B	94.8/11.7
R43	7030007300	S.RES ERJ2GEJ 332 X (3.3 k)	B	94.8/10
R44	7030007340	S.RES ERJ2GEJ 153 X (15 k)	B	90.7/11.9
R45	7030005220	S.RES ERJ2GEJ 223 X (22 k)	B	92.8/10
R46	7030005040	S.RES ERJ2GEJ 472 X (4.7 k)	T	92.1/14.1
R47	7030005050	S.RES ERJ2GEJ 103 X (10 k)	T	92.1/13.1
R48	7030005060	S.RES ERJ2GEJ 333 X (33 k)	B	50.9/8.6
R49	7030005160	S.RES ERJ2GEJ 105 X (1 M)	B	49.7/13.7
R50	7030005090	S.RES ERJ2GEJ 104 X (100 k)	B	49.7/11
R51	7030005290	S.RES ERJ2GEJ 682 X (6.8 k)	T	52.4/7
R52	7030007340	S.RES ERJ2GEJ 153 X (15 k)	T	59.1/12.5
R53	7030005000	S.RES ERJ2GEJ 471 X (470)	T	86.2/37.7
R54	7030010040	S.RES ERJ2GEJ-JPW	B	78.7/36.4
R55	7030005290	S.RES ERJ2GEJ 682 X (6.8 k)	T	81.8/25.3
R56	7030005040	S.RES ERJ2GEJ 472 X (4.7 k)	B	77.7/48.4
R57	7030005090	S.RES ERJ2GEJ 104 X (100 k)	B	28.3/14.3
R58	7030005050	S.RES ERJ2GEJ 103 X (10 k)	T	27.6/9
R59	7030005170	S.RES ERJ2GEJ 474 X (470 k)	T	27.6/8.1
R60	7030005000	S.RES ERJ2GEJ 471 X (470)	T	30.9/10.2
R61	7030005040	S.RES ERJ2GEJ 472 X (4.7 k)	T	28.8/8.5
R63	7030005220	S.RES ERJ2GEJ 223 X (22 k)	B	92.8/8.3
R64	7030005220	S.RES ERJ2GEJ 223 X (22 k)	B	92.8/6.5
R65	7030005090	S.RES ERJ2GEJ 104 X (100 k)	B	50.9/9.5
R66	7030005050	S.RES ERJ2GEJ 103 X (10 k)	T	86.6/11.8
R67	7030005290	S.RES ERJ2GEJ 682 X (6.8 k)	T	53.4/7
R68	7030007290	S.RES ERJ2GEJ 222 X (2.2 k)	B	53.7/17.9
R69	7030010040	S.RES ERJ2GEJ-JPW	T	85.6/13.6
R71	7030005090	S.RES ERJ2GEJ 104 X (100 k)	T	57.7/6.3
R72	7030007290	S.RES ERJ2GEJ 222 X (2.2 k)	T	64.9/55.6
R73	7030005000	S.RES ERJ2GEJ 471 X (470)	B	83.2/26.9
R74	7030007300	S.RES ERJ2GEJ 332 X (3.3 k)	B	81.8/25.3
R75	7030009140	S.RES ERJ2GEJ 272 X (2.7 k)	B	79.2/34
R76	7030007340	S.RES ERJ2GEJ 153 X (15 k)	B	80.3/29.1
R77	7030005580	S.RES ERJ2GEJ 560 X (56)	T	78.2/47.2
R78	7030005070	S.RES ERJ2GEJ 683 X (68 k)	B	81.5/34
R79	7030005040	S.RES ERJ2GEJ 472 X (4.7 k)	B	74.8/50
R80	7030005040	S.RES ERJ2GEJ 472 X (4.7 k)	B	70/50.9
R81	7030005110	S.RES ERJ2GEJ 224 X (220 k)	B	55.5/31.4
R82	7030005110	S.RES ERJ2GEJ 224 X (220 k)	B	66.3/33.3
R83	7030008400	S.RES ERJ2GEJ 182 X (1.8 k)	T	32.6/10.2
R85	7030005110	S.RES ERJ2GEJ 224 X (220 k)	T	25.1/20.7
R87	7030007300	S.RES ERJ2GEJ 332 X (3.3 k)	T	32.2/20.6
R88	7030005120	S.RES ERJ2GEJ 102 X (1 k)	B	91.7/6.5
R90	7030005000	S.RES ERJ2GEJ 471 X (470)	B	89.4/18.9
R91	7030005700	S.RES ERJ2GEJ 274 X (270 k)	T	85.6/11.8
R92	7030005090	S.RES ERJ2GEJ 104 X (100 k)	T	87.3/13.4
R93	7030005310	S.RES ERJ2GEJ 124 X (120 k)	T	83.9/8.2
R94	7030005080	S.RES ERJ2GEJ 823 X (82 k)	T	108/34.7
R95	7030005720	S.RES ERJ2GEJ 563 X (56 k)	T	108/33.8
R96	7030005240	S.RES ERJ2GEJ 473 X (47 k)	B	63.7/15.5
R97	7030005060	S.RES ERJ2GEJ 333 X (33 k)	B	53.3/16.6
R98	7030005030	S.RES ERJ2GEJ 152 X (1.5 k)	B	62.1/19.4
R99	7030005240	S.RES ERJ2GEJ 473 X (47 k)	B	60.2/19.4
R100	7030005030	S.RES ERJ2GEJ 152 X (1.5 k)	B	77.9/34.4
R101	7030008280	S.RES ERJ2GEJ 271 X (270)	B	79.2/29.1
R102	7030005530	S.RES ERJ2GEJ 100 X (10)	T	23/22.9
R103	7030005600	S.RES ERJ2GEJ 273 X (27 k)	B	29.9/23.8

[MAIN-A UNIT] (MDC compatible)

REF NO.	ORDER NO.	DESCRIPTION	M.	H/V LOCATION
R104	7030007280	S.RES ERJ2GEJ 331 X (330)	T	26.9/22.6
R105	7030005600	S.RES ERJ2GEJ 273 X (27 k)	B	30.9/23.8
R106	7030007270	S.RES ERJ2GEJ 151 X (150)	T	34.3/22.5
R107	7030007340	S.RES ERJ2GEJ 153 X (15 k)	B	129.7/52.3
R108	7030005240	S.RES ERJ2GEJ 473 X (47 k)	B	82.3/18.9
R109	7030005700	S.RES ERJ2GEJ 274 X (270 k)	B	81.3/18.9
R110	7030005050	S.RES ERJ2GEJ 103 X (10 k)	T	78.4/20.2
R111	7030005050	S.RES ERJ2GEJ 103 X (10 k)	T	95.9/28.3
R112	7030005700	S.RES ERJ2GEJ 274 X (270 k)	T	80.8/20.1
R113	7030005240	S.RES ERJ2GEJ 473 X (47 k)	B	57.9/19.4
R114	7030005090	S.RES ERJ2GEJ 104 X (100 k)	B	53.7/13.3
R115	7030005090	S.RES ERJ2GEJ 104 X (100 k)	T	114.4/18.4
R116	7030005090	S.RES ERJ2GEJ 104 X (100 k)	B	85.3/7.3
R118	7030006610	S.RES ERJ2GEJ 394 X (390 k)	T	89.5/11.7
R120	7030009280	S.RES ERJ2GEJ 391 X	T	30.3/34.3
R122	7030005600	S.RES ERJ2GEJ 273 X (27 k)	T	32.3/35.2
R123	7030005600	S.RES ERJ2GEJ 273 X (27 k)	T	33.5/35.2
R125	7030007270	S.RES ERJ2GEJ 151 X (150)	T	35/34
R127	7030005050	S.RES ERJ2GEJ 103 X (10 k)	B	79.1/18.3
R128	7030008290	S.RES ERJ2GEJ 183 X (18 k)	T	112.1/45.1
R129	7030005040	S.RES ERJ2GEJ 472 X (4.7 k)	T	112.1/44.1
R130	7030005070	S.RES ERJ2GEJ 683 X (68 k)	T	104.9/43.2
R131	7030005070	S.RES ERJ2GEJ 683 X (68 k)	T	104.9/44.1
R132	7030004980	S.RES ERJ2GEJ 101 X (100)	T	114.4/17.5
R134	7030005160	S.RES ERJ2GEJ 105 X (1 M)	T	128.9/26.3
R135	7030005160	S.RES ERJ2GEJ 105 X (1 M)	T	128.9/25.3
R136	7030005160	S.RES ERJ2GEJ 105 X (1 M)	T	128.9/24.2
R139	7410001140	S.ARY EXB28V104JX	T	130.6/20.6
R140	7030011000	S.RES RR0510P-392-D (3.9 k)	T	48.1/47.2
R141	7030008340	S.RES RR0510P-182-D (1.8 k)	T	50.8/45.4
R142	7030010040	S.RES ERJ2GEJ-JPW	T	49/47.2
R143	7030011000	S.RES RR0510P-392-D (3.9 k)	T	58.7/42.2
R144	7030008340	S.RES RR0510P-182-D (1.8 k)	T	61.7/40.4
R145	7030010040	S.RES ERJ2GEJ-JPW	T	59.6/42.2
R146	7030011000	S.RES RR0510P-392-D (3.9 k)	T	71.8/45.8
R147	7030008340	S.RES RR0510P-182-D (1.8 k)	T	70/41.9
R148	7030010040	S.RES ERJ2GEJ-JPW	T	71.8/44.9
R149	7030005310	S.RES ERJ2GEJ 124 X (120 k)	T	69.1/36.3
R150	7030005240	S.RES ERJ2GEJ 473 X (47 k)	T	89.8/15.5
R151	7030005060	S.RES ERJ2GEJ 333 X (33 k)	T	91/16.1
R152	7030005090	S.RES ERJ2GEJ 104 X (100 k)	T	88.9/16.4
R153	7030007300	S.RES ERJ2GEJ 332 X (3.3 k)	T	39.9/32.2
R154	7030004970	S.RES ERJ2GEJ 470 X (47)	T	42.9/40.1
R155	7030005120	S.RES ERJ2GEJ 102 X (1 k)	T	41.7/32.4
R156	7030004970	S.RES ERJ2GEJ 470 X (47)	T	42.5/41.3
R157	7030005090	S.RES ERJ2GEJ 104 X (100 k)	B	33.7/23.6
R158	7030005240	S.RES ERJ2GEJ 473 X (47 k)	T	112.1/42.3
R159	7030005240	S.RES ERJ2GEJ 473 X (47 k)	T	112.1/40.5
R160	7030005240	S.RES ERJ2GEJ 473 X (47 k)	T	113.8/38.7
R161	7030005070	S.RES ERJ2GEJ 683 X (68 k)	T	104.9/46.8
R162	7030005240	S.RES ERJ2GEJ 473 X (47 k)	T	128.2/14.4
R163	7030005240	S.RES ERJ2GEJ 473 X (47 k)	T	128.7/16.3
R164	7030005240	S.RES ERJ2GEJ 473 X (47 k)	T	129.4/14.4
R165	7030005230	S.RES ERJ2GEJ 334 X (330 k)	T	128.7/17.8
R166	7030005230	S.RES ERJ2GEJ 334 X (330 k)	T	128.7/18.7
R167	7030005230	S.RES ERJ2GEJ 334 X (330 k)	T	129.8/16.2
R168	7030006581	S.RES ERA3YED 122V (1.2 k)	T	53.6/47.5
R169	7030007230	S.RES ERA3YED 102V (1 k)	T	63.8/42.6
R170	7030010390	S.RES ERA3YED 821V (820)	T	74.1/43.2
R171	7030005090	S.RES ERJ2GEJ 104 X (100 k)	T	56.3/46.7
R172	7030008280	S.RES ERJ2GEJ 271 X (270)	B	36.4/46.4
R173	7030007270	S.RES ERJ2GEJ 151 X (150)	B	39/31.2
R174	7030004980	S.RES ERJ2GEJ 101 X (100)	B	34.6/38.7
R175	7030004980	S.RES ERJ2GEJ 101 X (100)	B	33/38.7
R176	7030005590	S.RES ERJ2GEJ 680 X (68)	B	31.3/37.4
R177	7030005590	S.RES ERJ2GEJ 680 X (68)	B	31.3/34.9
R178	7030005240	S.RES ERJ2GEJ 473 X (47 k)	T	113.8/37.8
R179	7030008300	S.RES ERJ2GEJ 184 X (180 k)	T	117.6/34.6
R180	7030005720	S.RES ERJ2GEJ 563 X (56 k)	T	118.3/35.3
R181	7030005220	S.RES ERJ2GEJ 223 X (22 k)	T	119/36
R182	7030005120	S.RES ERJ2GEJ 102 X (1 k)	T	116.9/33.9
R183	7030005070	S.RES ERJ2GEJ 683 X (68 k)	T	103.1/46.8
R184	7030005220	S.RES ERJ2GEJ 223 X (22 k)	T	113.8/36.9
R185	7030005070	S.RES ERJ2GEJ 683 X (68 k)	B	102.3/45.6
R186	7030005160	S.RES ERJ2GEJ 105 X (1 M)	T	81.8/18.9
R187	7030005060	S.RES ERJ2GEJ 333 X (33 k)	T	80.6/17.5
R188	7030005090	S.RES ERJ2GEJ 104 X (100 k)	T	78.5/14.9
R189	7030005720	S.RES ERJ2GEJ 563 X (56 k)	T	78.5/15.8
R190	7030005080	S.RES ERJ2GEJ 823 X (82 k)	T	80.6/18.4
R191	7030004980	S.RES ERJ2GEJ 101 X (100)	T	60.5/47
R192	7030004980	S.RES ERJ2GEJ 101 X (100)	B	66.3/53.2
R193	7030005050	S.RES ERJ2GEJ 103 X (10 k)	B	66.3/45.2
R194	7030005110	S.RES ERJ2GEJ 224 X (220 k)	B	62.7/50.8
R195	7030009320	S.RES ERJ2GEJ 4R7 X (4.7)	B	55.8/50.3
R196	7030005120	S.RES ERJ2GEJ 102 X (1 k)	B	65.2/42.8
R197	7030005050	S.RES ERJ2GEJ 103 X (10 k)	B	64.7/44.5
R198	7030010090	S.RES ERJ2GEJ 180 X (18)	B	36/47.6
R199	7030008280	S.RES ERJ2GEJ 271 X (270)	B	37.3/47.6
R200	7030005050	S.RES ERJ2GEJ 103 X (10 k)	B	8.4/20.6
R201	7410001130	S.ARY EXB28V102JX	B	117/51.7
R202	7030005090	S.RES ERJ2GEJ 104 X (100 k)	B	122.5/44.8
R203	7030005120	S.RES ERJ2GEJ 102 X (1 k)	B	127.4/47.3
R204	7410000750	S.ARY EXB-V4V 104JV (100 k)	B	129.6/42.7
R205	7030008010	S.RES ERJ2GEJ 123 X (12 k)	T	127.5/40.1
R206	7030005120	S.RES ERJ2GEJ 102 X (1 k)	B	127/39.5
R207	7030005050	S.RES ERJ2GEJ 103 X (10 k)	T	120.9/37.5
R208	7030005050	S.RES ERJ2GEJ 103 X (10 k)	T	121.6/38.2
R209	7410001130	S.ARY EXB28V102JX	B	125.8/40.8
R210	7030008010	S.RES ERJ2GEJ 123 X (12 k)	T	124.2/38.4
R211	7030008010	S.RES ERJ2GEJ 123 X (12 k)	T	125.9/41.1
R212	7030005160	S.RES ERJ2GEJ 105 X (1 M)	T	122.1/41.1
R213	7030005090	S.RES ERJ2GEJ 104 X (100 k)	B	55.3/51.8
R214	7030004980	S.RES ERJ2GEJ 101 X (100)	B	56.4/54
R215	7030005050	S.RES ERJ2GEJ 103 X (10 k)	B	63.5/61.3

M.=Mounted side (T: Mounted on the Top side, B: Mounted on the Bottom side)
S.=Surface mount

[MAIN-A UNIT] (MDC compatible)

REF NO.	ORDER NO.	DESCRIPTION	M.	H/V LOCATION
R216	7030005590	S.RES ERJ2GEJ 680 X (68)	B	61.9/62.3
R218	7030010040	S.RES ERJ2GEJ-JPW	B	56.4/51.8
R219	7030005050	S.RES ERJ2GEJ 103 X (10 k)	B	46/49.8
R220	7030005040	S.RES ERJ2GEJ 472 X (4.7 k)	B	49.3/52
R221	7030005050	S.RES ERJ2GEJ 103 X (10 k)	B	44.4/49.8
R222	7030005090	S.RES ERJ2GEJ 104 X (100 k)	B	17.7/33.9
R223	7030005090	S.RES ERJ2GEJ 104 X (100 k)	B	16.2/33.9
R224	7030005050	S.RES ERJ2GEJ 103 X (10 k)	B	15.7/32.7
R225	7030005000	S.RES ERJ2GEJ 471 X (470)	B	8/19.2
R226	7030004980	S.RES ERJ2GEJ 101 X (100)	T	109.7/53.5
R227	7030005090	S.RES ERJ2GEJ 104 X (100 k)	B	107.1/49.3
R228	7410001140	S.ARY EXB28V104JX	T	103.3/49
R230	7030005050	S.RES ERJ2GEJ 103 X (10 k)	B	124.7/42.7
R232	7030005530	S.RES ERJ2GEJ 100 X (10)	T	120.4/41.1
R233	7410000750	S.ARY EXB-V4V 104JV (100 k)	T	130/34.7
R234	7410001130	S.ARY EXB28V102JX	B	129.4/34.4
R236	7030009530	S.RES ERJ2GEJ 270 X (27)	B	63.9/71.5
R237	7030005040	S.RES ERJ2GEJ 472 X (4.7 k)	B	65.3/69.7
R238	7030008010	S.RES ERJ2GEJ 123 X (12 k)	B	61.9/65.1
R240	7030005570	S.RES ERJ2GEJ 820 X (82)	B	62.4/67.4
R241	7030004980	S.RES ERJ2GEJ 101 X (100)	B	58.5/66
R242	7030004970	S.RES ERJ2GEJ 470 X (47)	T	12/33.1
R243	7030009320	S.RES ERJ2GEJ 4R7 X (4.7)	T	10/36
R244	7030004980	S.RES ERJ2GEJ 101 X (100)	B	15.1/36.3
R245	7030005530	S.RES ERJ2GEJ 100 X (10)	B	11.9/39.9
R246	7030005090	S.RES ERJ2GEJ 104 X (100 k)	B	7.5/38.6
R247	7030004990	S.RES ERJ2GEJ 221 X (220)	B	7.7/36.3
R248	7410001130	S.ARY EXB28V102JX	B	103.9/47.9
R249	7410001130	S.ARY EXB28V102JX	B	123.9/27.6
R250	7410001130	S.ARY EXB28V102JX	B	122.1/25.7
R251	7410001140	S.ARY EXB28V104JX	T	124.7/28.7
R252	7410001140	S.ARY EXB28V104JX	T	122.1/25.7
R253	7030008290	S.RES ERJ2GEJ 183 X (18 k)	T	9.5/40.5
R254	7030005050	S.RES ERJ2GEJ 103 X (10 k)	T	7.4/42.2
R255	7030005310	S.RES ERJ2GEJ 124 X (120 k)	B	6.6/38.6
R257	7030008400	S.RES ERJ2GEJ 182 X (1.8 k)	T	9/42.2
R258	7030005170	S.RES ERJ2GEJ 474 X (470 k)	T	11/44.5
R259	7030005090	S.RES ERJ2GEJ 104 X (100 k)	B	6/45.1
R260	7030005090	S.RES ERJ2GEJ 104 X (100 k)	B	6/47
R261	7410001130	S.ARY EXB28V102JX	B	99.7/43.5
R262	7410001130	S.ARY EXB28V102JX	T	100.2/37.4
R263	7410001130	S.ARY EXB28V102JX	B	97/40.7
R264	7410001140	S.ARY EXB28V104JX	T	103.8/37
R265	7030005050	S.RES ERJ2GEJ 103 X (10 k)	T	103.8/39.2
R266	7410001130	S.ARY EXB28V102JX	B	120.1/23.5
R267	7410001130	S.ARY EXB28V102JX	B	118.3/21.7
R268	7410001130	S.ARY EXB28V102JX	B	116.5/19.9
R269	7030005090	S.RES ERJ2GEJ 104 X (100 k)	T	119.4/20.8
R271	7030004980	S.RES ERJ2GEJ 101 X (100)	T	77.6/78.5
R272	7030007280	S.RES ERJ2GEJ 331 X (330)	T	61/76.5
R273	7030005050	S.RES ERJ2GEJ 103 X (10 k)		
		[EXP-02], [EUR-02] only	T	62.3/76.1
R274	7030004980	S.RES ERJ2GEJ 101 X (100)	T	56.7/69.3
R275	7030005030	S.RES ERJ2GEJ 152 X (1.5 k)	T	64.8/73.8
R276	7030005040	S.RES ERJ2GEJ 472 X (4.7 k)		
		[EXP-02], [EUR-02]	T	65.8/73.8
	7030007300	S.RES ERJ2GEJ 332 X (3.3 k)		
		[USA-02], [F5061D]	T	65.8/73.8
R277	7030005050	S.RES ERJ2GEJ 103 X (10 k)	B	4.8/45.6
R278	7030005050	S.RES ERJ2GEJ 103 X (10 k)	T	132.2/29.9
R279	7030005090	S.RES ERJ2GEJ 104 X (100 k)	T	131.3/29.9
R280	7410001130	S.ARY EXB28V102JX	B	95.2/38.9
R281	7030005090	S.RES ERJ2GEJ 104 X (100 k)	T	93.7/48.8
R282	7410000750	S.ARY EXB-V4V 104JV (100 k)	T	97.2/45.3
R283	7410001130	S.ARY EXB28V102JX	T	103.1/21.7
R284	7030005120	S.RES ERJ2GEJ 102 X (1 k)	T	111.2/25.1
R285	7410001130	S.ARY EXB28V102JX	B	107.1/19.9
R286	7410001140	S.ARY EXB28V104JX	T	121.7/22.2
R287	7030004990	S.RES ERJ2GEJ 221 X (220)		
		[EXP-02], [EUR-02]	T	55.7/72.6
	7030005580	S.RES ERJ2GEJ 560 X (56)		
		[USA-02], [F5061D]	T	55.7/72.6
R288	7030005100	S.RES ERJ2GEJ 154 X (150 k)	T	54.1/68.2
R289	7030005170	S.RES ERJ2GEJ 474 X (470 k)		
		[USA-02], [F5061D] only	B	38/63.7
R290	7520000260	S.POS PRF18BB471QB1RB		
		[USA-02], [F5061D] only	T	33.9/63
R291	7030005120	S.RES ERJ2GEJ 102 X (1 k)	T	109.2/24.5
R292	7030006070	S.RES ERJ12YJ101U (100)	B	43.6/66.1
R293	7030005120	S.RES ERJ2GEJ 102 X (1 k)	T	50.6/70.5
R294	7030005050	S.RES ERJ2GEJ 103 X (10 k)	T	51.7/68.2
R295	7030008290	S.RES ERJ2GEJ 183 X (18 k)	T	50.6/71.4
R296	7030005040	S.RES ERJ2GEJ 472 X (4.7 k)	T	53.8/64.2
R297	7030008010	S.RES ERJ2GEJ 123 X (12 k)	T	50.5/68.6
R298	7030005090	S.RES ERJ2GEJ 104 X (100 k)	T	45.6/69.9
R300	7030005050	S.RES ERJ2GEJ 103 X (10 k)	B	99.9/59.6
R301	7030007290	S.RES ERJ2GEJ 222 X (2.2 k)	T	106.2/55.6
R302	7030000480	S.RES MCR10EZHJ 6.8 k	T	79/64.4
R303	7030000480	S.RES MCR10EZHJ 6.8 k	T	80.9/64.4
R304	7030000440	S.RES MCR10EZHJ 3.3 k	T	82.8/64.4
R305	7030005050	S.RES ERJ2GEJ 103 X (10 k)	T	40.3/19.4
R306	7030005040	S.RES ERJ2GEJ 472 X (4.7 k)	T	41/21.7
R307	7030005050	S.RES ERJ2GEJ 103 X (10 k)	B	27/63
R309	7030005070	S.RES ERJ2GEJ 683 X (68 k)	T	89.9/7.2
R310	7030004980	S.RES ERJ2GEJ 101 X (100)	B	109.3/62.8
R311	7030000220	S.RES MCR10EZHJ 47 (470)	B	15/76.9
R312	7030005700	S.RES ERJ2GEJ 274 X (270 k)	B	31.5/62.4
R313	7030003370	S.RES ERJ3GEYJ 271 V (270)	B	8.6/54
R314	7030005600	S.RES ERJ2GEJ 273 X (27 k)	B	3/53
R315	7030000220	S.RES MCR10EZHJ 47 (470)	B	3.5/57.4
R316	7030005170	S.RES ERJ2GEJ 474 X (470 k)	T	90.8/11.3
R317	7030005160	S.RES ERJ2GEJ 105 X (1 M)	B	108.3/83.7
R318	7030005160	S.RES ERJ2GEJ 105 X (1 M)	B	112.5/82.7
R319	7030005120	S.RES ERJ2GEJ 102 X (1 k)	B	112.1/81.5

[MAIN-A UNIT] (MDC compatible)

REF NO.	ORDER NO.	DESCRIPTION	M.	H/V LOCATION
R320	7030005160	S.RES ERJ2GEJ 105 X (1 M)	B	107.2/82.4
R321	7030004970	S.RES ERJ2GEJ 470 X (47)	B	108.4/82
R322	7030005600	S.RES ERJ2GEJ 273 X (27 k)	B	2.1/79.2
R323	7030003370	S.RES ERJ3GEYJ 271 V (270)	B	6.3/78.7
R324	7030000620	S.RES MCR10EZHJ 100 k	B	5.6/85.5
R325	7030005050	S.RES ERJ2GEJ 103 X (10 k)	B	130.5/45.2
R326	7030005090	S.RES ERJ2GEJ 104 X (100 k)	B	131.8/51.7
R327	7030007290	S.RES ERJ2GEJ 222 X (2.2 k)	B	131.1/54.2
R328	7030005090	S.RES ERJ2GEJ 104 X (100 k)	B	134.2/51.7
R332	7030005090	S.RES ERJ2GEJ 104 X (100 k)	T	109.6/27.9
R333	7030005120	S.RES ERJ2GEJ 102 X (1 k)	T	109.6/26.9
R334	7520000270	S.POS PRG21BC4R7MM1RA	T	101.4/79.7
R335	7030005050	S.RES ERJ2GEJ 103 X (10 k)	T	101.8/83.9
R336	7030005120	S.RES ERJ2GEJ 102 X (1 k)	T	111.3/78.5
R337	7410001130	S.ARY EXB28V102JX	T	104.6/75.9
R338	7030005651	S.RES ERA3YKD 304V (300 k)	T	113.6/54.3
R339	7030005871	S.RES ERA3YKD 104V (100 k)	T	113.6/52.9
R340	7030003560	S.RES ERJ3GEYJ 103 V (10 k)	T	136.3/65.7
R341	7030003560	S.RES ERJ3GEYJ 103 V (10 k)	B	130.7/85.9
R342	7030005090	S.RES ERJ2GEJ 104 X (100 k)	B	135.4/52.2
R343	7030007290	S.RES ERJ2GEJ 222 X (2.2 k)	B	138.2/49.4
R344	7030005110	S.RES ERJ2GEJ 224 X (220 k)	B	133.3/54.6
R345	7030005110	S.RES ERJ2GEJ 224 X (220 k)	B	133.3/56.3
R346	7030008410	S.RES ERJ2GEJ 392 X (3.9 k)	B	137/52.2
R347	7030005050	S.RES ERJ2GEJ 103 X (10 k)	B	137.8/53.7
R348	7030005700	S.RES ERJ2GEJ 274 X (270 k)	B	131/75.5
R349	7030005090	S.RES ERJ2GEJ 104 X (100 k)	B	129.8/76.5
R350	7030005120	S.RES ERJ2GEJ 102 X (1 k)	B	139.1/47.8
R351	7030004980	S.RES ERJ2GEJ 101 X (100)	B	136.3/38.1
R352	7030008300	S.RES ERJ2GEJ 184 X (180 k)	B	139.7/39
R353	7030005230	S.RES ERJ2GEJ 334 X (330 k)	B	138.2/47.8
R354	7030010040	S.RES ERJ2GEJ-JPW	T	140.4/36
R355	7030008280	S.RES ERJ2GEJ 271 X (270)	B	139.7/34.3
R356	7540000290	ABS ERZV10D220		
R359	7030005090	S.RES ERJ2GEJ 104 X (100 k)	B	114.8/82.9
R360	7030005090	S.RES ERJ2GEJ 104 X (100 k)	T	80.6/5.3
R361	7030005600	S.RES ERJ2GEJ 273 X (27 k)	T	78.4/5.3
R362	7030005050	S.RES ERJ2GEJ 103 X (10 k)	T	124.8/50.2
R363	7030005120	S.RES ERJ2GEJ 102 X (1 k)	T	42.9/38.3
R364	7030009140	S.RES ERJ2GEJ 272 X (2.7 k)	T	42.9/37.4
R365	7030004970	S.RES ERJ2GEJ 470 X (47)	T	38.3/37.9
R366	7030005050	S.RES ERJ2GEJ 103 X (10 k)	B	131.4/63.4
R367	7030005000	S.RES ERJ2GEJ 471 X (470)	B	130.1/63
R368	7030005050	S.RES ERJ2GEJ 103 X (10 k)	T	78.3/7.6
R370	7030005010	S.RES ERJ2GEJ 681 X (680)	T	71.2/70.4
R371	7030005050	S.RES ERJ2GEJ 103 X (10 k)	T	119.5/84.6
R372	7030005040	S.RES ERJ2GEJ 472 X (4.7 k)	T	25.9/8.1
R373	7030005040	S.RES ERJ2GEJ 472 X (4.7 k)	T	74/21.6
R375	7030005030	S.RES ERJ2GEJ 152 X (1.5 k)	T	27.6/5.3
R376	7030005160	S.RES ERJ2GEJ 105 X (1 M)	B	109.1/12.1
R377	7030005160	S.RES ERJ2GEJ 105 X (1 M)	B	110.9/12.1
R378	7410001140	S.ARY EXB28V104JX	B	100.7/18.3
R379	7030005090	S.RES ERJ2GEJ 104 X (100 k)	T	111.6/23.8
R386	7030005120	S.RES ERJ2GEJ 102 X (1 k)	T	105.8/85.1
R387	7030005120	S.RES ERJ2GEJ 102 X (1 k)	T	107.8/85.1
R389	7030005090	S.RES ERJ2GEJ 104 X (100 k)	T	110.4/10.7
R390	7030008300	S.RES ERJ2GEJ 184 X (180 k)	B	23/10.5
R391	7030005120	S.RES ERJ2GEJ 102 X (1 k)	B	23.9/7.3
R392	7030008400	S.RES ERJ2GEJ 182 X (1.8 k)	B	29.2/5.6
R393	7030004980	S.RES ERJ2GEJ 101 X (100)	B	28.3/7.3
R394	7030004980	S.RES ERJ2GEJ 101 X (100)	B	23/8.9
R395	7030005290	S.RES ERJ2GEJ 682 X (6.8 k)	B	22.1/7.3
R396	7030009290	S.RES ERJ2GEJ 562 X (5.6 k)	B	22.1/5.6
R397	7030005120	S.RES ERJ2GEJ 102 X (1 k)	B	79.8/46.1
R398	7030005120	S.RES ERJ2GEJ 102 X (1 k)	T	79.3/41.3
R399	7030005050	S.RES ERJ2GEJ 103 X (10 k)	B	95.8/10
R400	7030005030	S.RES ERJ2GEJ 152 X (1.5 k)	B	23/5.6
C1	4030017420	S.CER ECJ0EC1H470J	T	88.9/54.3
C2	4030017420	S.CER ECJ0EC1H470J	T	89.9/54.3
C3	4030017420	S.CER ECJ0EC1H470J	T	41.5/15.4
C4	4030017420	S.CER ECJ0EC1H470J	B	50/15
C5	4030017460	S.CER ECJ0EB1E102K	T	89.4/34
C6	4550007080	S.TAN TEESVA 1C 106M8R	T	80.8/55.1
C7	4030017420	S.CER ECJ0EC1H470J	T	84/18.4
C8	4030017420	S.CER ECJ0EC1H470J	T	89.9/52
C9	4030016930	S.CER ECJ0EB1A104K	T	88.9/52
C10	4030016930	S.CER ECJ0EB1A104K	T	80.6/50.7
C11	4030016930	S.CER ECJ0EB1A104K	T	10.9/18.8
C12	4030016930	S.CER ECJ0EB1A104K	T	8.5/7.4
C13	4030016930	S.CER ECJ0EB1A104K	T	85.6/10
C14	4030016930	S.CER ECJ0EB1A104K	T	86.6/10
C15	4030017460	S.CER ECJ0EB1E102K	T	41.5/7.7
C16	4550000460	S.TAN TEESVA 1C 105M8R	T	42.7/6.2
C17	4550000460	S.TAN TEESVA 1C 105M8R	B	42.7/6.2
C18	4030017420	S.CER ECJ0EC1H470J	T	41.5/14.5
C19	4030017420	S.CER ECJ0EC1H470J	B	50/15.9
C20	4030016970	S.CER ECJ0EB1C223K	B	100.9/52.3
C21	4030017420	S.CER ECJ0EC1H470J	T	41.5/13.5
C22	4030017420	S.CER ECJ0EC1H470J	T	41.5/12.6
C23	4030016930	S.CER ECJ0EB1A104K	T	51.8/5.6
C24	4030017660	S.CER ECJ0EC1H330J	B	39.8/9.8
C25	4030017420	S.CER ECJ0EC1H470J	T	61.4/6
C26	4030016930	S.CER ECJ0EB1A104K	B	37.2/5.8
C27	4030018240	S.CER ECJ0EB1E562K	B	36.3/7.5
C28	4030016790	S.CER ECJ0EB1C103K	T	79.3/7.6
C29	4030017460	S.CER ECJ0EB1E102K	T	79/13.6
C30	4030016930	S.CER ECJ0EB1A104K	T	78.1/13.6
C31	4030017460	S.CER ECJ0EB1E102K	T	80.6/51.7
C32	4030017500	S.CER ECJ0EC1H560J	B	33.3/15.9
C33	4030016930	S.CER ECJ0EB1A104K	B	34.8/12.8
C34	4030017570	S.CER ECJ0EC1H040B	B	32.1/15.4
C35	4030017590	S.CER ECJ0EC1H070C	B	30.9/15.9

M.=Mounted side (T: Mounted on the Top side, B: Mounted on the Bottom side)
S.=Surface mount

[MAIN-A UNIT] (MDC compatible)

REF NO.	ORDER NO.	DESCRIPTION	M.	H/V LOCATION
C36	4030016930	S.CER ECJ0EB1A104K	T	22.4/14.9
C37	4030017360	S.CER ECJ0EC1H030B	B	28.3/15.4
C38	4030016930	S.CER ECJ0EB1A104K	T	22/6.2
C39	4030016930	S.CER ECJ0EB1A104K	B	13.6/6.2
C40	4030016930	S.CER ECJ0EB1A104K	T	23.8/6.2
C41	4030016930	S.CER ECJ0EB1A104K	T	22/12.5
C42	4030016930	S.CER ECJ0EB1A104K	T	23/12.5
C43	4030017430	S.CER ECJ0EC1H101J	T	26.4/9.4
C44	4030017430	S.CER ECJ0EC1H101J	T	25.5/9.4
C45	4030017790	S.CER ECJ0EB1E682K	B	91.7/10
C46	4030016930	S.CER ECJ0EB1A104K	B	93.8/10
C47	4030016970	S.CER ECJ0EB1C223K	T	92.1/15.1
C48	4030017710	S.CER ECJ0EC1H181J	B	49.7/9.1
C49	4550007080	S.TAN TEESVA 1C 106M8R	T	52.1/15.4
C50	4030017460	S.CER ECJ0EB1E102K	T	54.3/12
C51	4030017400	S.CER ECJ0EC1H220J	T	47.8/19
C52	4030017400	S.CER ECJ0EC1H220J	T	44.7/7.8
C53	4030017900	S.CER ECJ0EB1C123K	T	59.1/10.6
C54	4030018080	S.CER ECJ0EB1H182K	T	59.1/11.5
C55	4030016790	S.CER ECJ0EB1C103K	T	64.5/57
C56	4030017620	S.CER ECJ0EC1H100C	T	87.7/35.5
C57	4030016930	S.CER ECJ0EB1A104K	T	80.1/36.7
C58	4030017430	S.CER ECJ0EC1H101J	T	85.2/38.6
C59	4030017460	S.CER ECJ0EB1E102K	T	81.8/24.3
C60	4030017420	S.CER ECJ0EC1H470J	T	82.9/41.5
C63	4030017620	S.CER ECJ0EC1H100C	T	84/39.1
C64	4030017780	S.CER ECJ0EB1E472K	T	81.3/41.3
C65	4030017460	S.CER ECJ0EB1E102K	T	27.6/10.6
C66	4550006050	S.TAN TEESVA 0J 106M8R	T	31.1/6.8
C67	4030017460	S.CER ECJ0EB1E102K	T	27.6/7.1
C68	4030017460	S.CER ECJ0EB1E102K	T	30.5/9
C69	4030017460	S.CER ECJ0EB1E102K	T	32.6/15.4
C70	4030017420	S.CER ECJ0EC1H470J	B	28.3/13.4
C71	4030016940	S.CER ECJ0EB1A393K	B	91.7/8.3
C72	4030018860	S.CER ECJ0EB0J105K	B	50.7/11
C73	4030017750	S.CER ECJ0EB1E122K	B	51.3/16.6
C74	4030016930	S.CER ECJ0EB1A104K	B	52.3/16.6
C75	4030016930	S.CER ECJ0EB1A104K	B	56.2/12.6
C77	4030017460	S.CER ECJ0EB1E102K	B	54.2/16.6
C78	4030017460	S.CER ECJ0EB1E102K	B	53.7/9
C79	4550007080	S.TAN TEESVA 1C 106M8R	T	66.5/55.3
C80	4030017780	S.CER ECJ0EB1E472K	B	79.2/35
C81	4550000460	S.TAN TEESVA 1C 105M8R	B	82.2/36.4
C82	4030017460	S.CER ECJ0EB1E102K	B	84.1/26.9
C83	4550000460	S.TAN TEESVA 1C 105M8R	B	84/32.5
C84	4030017460	S.CER ECJ0EB1E102K	T	78.2/48.8
C85	4030017380	S.CER ECJ0EC1H050B	B	77.1/47.2
C86	4030017350	S.CER ECJ0EC1H020B	B	74.8/48.3
C87	4030017580	S.CER ECJ0EC1H060C	B	73.7/48.3
C88	4030017380	S.CER ECJ0EC1H050B	B	72.4/48.6
C89	4030017580	S.CER ECJ0EC1H060C	B	71.1/49.1
C90	4030017350	S.CER ECJ0EC1H020B	B	70/49.1
C91	4030016790	S.CER ECJ0EB1C103K	T	27.3/17.3
C92	4030017460	S.CER ECJ0EB1E102K	T	25.1/22.4
C93	4030017680	S.CER ECJ0EC1H820J	T	32.6/12.6
C94	4030017460	S.CER ECJ0EB1E102K	B	27.8/12.5
C95	4030016790	S.CER ECJ0EB1C103K	T	28.9/20.1
C98	4030016930	S.CER ECJ0EB1A104K	B	89.3/7.3
C99	4030016930	S.CER ECJ0EB1A104K	B	90.7/14.8
C100	4030016930	S.CER ECJ0EB1A104K	T	87.3/14.3
C101	4030017710	S.CER ECJ0EC1H181J	T	83.9/7.2
C102	4030016930	S.CER ECJ0EB1A104K	T	108/32.8
C103	4030016930	S.CER ECJ0EB1A104K	B	55.3/19.3
C104	4550003250	S.TAN TEESVA 1V 474M8R	B	67.2/24.2
C105	4030017420	S.CER ECJ0EC1H470J	T	49.2/29.4
C106	4030017460	S.CER ECJ0EB1E102K	B	78/29.1
C107	4030016930	S.CER ECJ0EB1A104K	B	54.2/28.8
C109	4550006480	S.TAN TEESVA 1C 475M8R	B	56.1/27.7
C110	4030017420	S.CER ECJ0EC1H470J	T	60.1/27
C111	4030016930	S.CER ECJ0EB1A104K	B	66.3/30.3
C112	4030017460	S.CER ECJ0EB1E102K	B	67.4/30.3
C113	4030017420	S.CER ECJ0EC1H470J	T	72.1/26.6
C114	4030016790	S.CER ECJ0EB1C103K	T	24.2/22.3
C115	4030016790	S.CER ECJ0EB1C103K	T	21.4/22
C116	4030016790	S.CER ECJ0EB1C103K	T	28.5/22.6
C118	4030017640	S.CER ECJ0EC1H150J	T	20.5/28.7
C120	4030016790	S.CER ECJ0EB1C103K	T	32.6/22.5
C122	4030017660	S.CER ECJ0EC1H330J	T	39.8/28.9
C124	4030016930	S.CER ECJ0EB1A104K	B	90.3/18.9
C125	4030017460	S.CER ECJ0EB1E102K	B	128.5/52.6
C126	4030016930	S.CER ECJ0EB1A104K	T	79.6/20.6
C127	4030016930	S.CER ECJ0EB1A104K	B	82.8/20.1
C128	4030016930	S.CER ECJ0EB1A104K	T	78.4/19.3
C129	4030016930	S.CER ECJ0EB1A104K	B	63.7/16.4
C130	4030016930	S.CER ECJ0EB1A104K	B	135.6/25.4
C131	4030017660	S.CER ECJ0EC1H330J	T	135.9/25.7
C132	4030017660	S.CER ECJ0EC1H330J	T	135.9/18
C133	4030018010	S.CER ECJ0EC1H360J	T	48.1/35.5
C134	4030017640	S.CER ECJ0EC1H150J	T	49.4/34.8
C135	4030017660	S.CER ECJ0EC1H330J	T	64.1/32.5
C136	4030017340	S.CER ECJ0EC1H010B	T	71.1/30.8
C137	4030017570	S.CER ECJ0EC1H040B	T	71.1/29.9
C138	4030017730	S.CER ECJ0EB1E471K	T	71.9/33
C139	4030017390	S.CER ECJ0EC1H180J	T	62.1/32
C140	4030017360	S.CER ECJ0EC1H030B	T	72.5/30.7
C141	4030017360	S.CER ECJ0EC1H030B	T	72.1/29
C142	4030018860	S.CER ECJ0EB0J105K	T	89.5/12.7
C143	4030017400	S.CER ECJ0EC1H220J	T	71.3/36.6
C145	4030016790	S.CER ECJ0EB1C103K	T	31.4/35.2
C146	4030017610	S.CER ECJ0EC1H090C	T	35/33.1
C147	4030016790	S.CER ECJ0EB1C103K	T	34.5/35.2
C148	4030016790	S.CER ECJ0EB1C103K	T	30.9/26.4
C149	4030016930	S.CER ECJ0EB1A104K	B	78.2/17.4
C150	4030018560	S.CER C2012 JB 1A 475K-T	B	86.9/19.8

[MAIN-A UNIT] (MDC compatible)

REF NO.	ORDER NO.	DESCRIPTION	M.	H/V LOCATION
C151	4030016930	S.CER ECJ0EB1A104K	T	112.1/46
C152	4030016930	S.CER ECJ0EB1A104K	T	109.6/34.3
C153	4030017460	S.CER ECJ0EB1E102K	T	111.4/34.3
C154	4030018860	S.CER ECJ0EB0J105K	T	82.7/19.8
C155	4030017420	S.CER ECJ0EC1H470J	T	110.3/38.7
C156	4030017910	S.CER ECJ0EB1H152K	T	104.9/42.3
C157	4030017420	S.CER ECJ0EC1H470J	T	110.8/48.6
C158	4030017430	S.CER ECJ0EC1H101J	T	110.3/37.8
C159	4030017460	S.CER ECJ0EB1E102K	T	120.3/5.5
C160	4030017460	S.CER ECJ0EB1E102K	B	130.6/25.4
C161	4030018010	S.CER ECJ0EC1H360J	T	50.8/43.8
C162	4030017590	S.CER ECJ0EC1H070C	T	52.1/43.4
C163	4030017660	S.CER ECJ0EC1H330J	T	58.7/39.4
C164	4030017660	S.CER ECJ0EC1H330J	T	48.6/45.8
C165	4030017660	S.CER ECJ0EC1H330J	T	49.9/45.4
C166	4030017580	S.CER ECJ0EC1H060C	T	60.1/38.9
C167	4030017420	S.CER ECJ0EC1H470J	T	70/38.9
C168	4030017660	S.CER ECJ0EC1H330J	T	59.1/40.8
C169	4030017660	S.CER ECJ0EC1H330J	T	60.7/40.4
C170	4030017550	S.CER ECJ0EC1H1R5B	T	70.4/36.6
C171	4030017570	S.CER ECJ0EC1H040B	T	70/37.9
C172	4030017400	S.CER ECJ0EC1H220J	T	70/42.9
C173	4030017400	S.CER ECJ0EC1H220J	T	70/43.9
C174	4030017640	S.CER ECJ0EC1H150J	T	38.3/38.8
C175	4030016790	S.CER ECJ0EB1C103K	B	41.4/39.4
C176	4030016930	S.CER ECJ0EB1A104K	B	41/33.2
C177	4030017730	S.CER ECJ0EB1E471K	B	41/32.2
C178	4030016790	S.CER ECJ0EB1C103K	B	34.5/33
C180	4030017740	S.CER ECJ0EB1E821K	T	109.2/48.6
C181	4030016930	S.CER ECJ0EB1A104K	T	112.1/43.2
C182	4030016780	S.CER ECJ0EB1C153K	T	112.1/39.6
C183	4030017420	S.CER ECJ0EC1H470J	T	104.9/45
C184	4030017760	S.CER ECJ0EB1H222K	T	104.9/45.9
C185	4030017690	S.CER ECJ0EC1H121J	T	107.8/48.6
C186	4030016790	S.CER ECJ0EB1C103K	T	51.7/45.4
C187	4030017460	S.CER ECJ0EB1E102K	T	52.6/45.4
C188	4030016790	S.CER ECJ0EB1C103K	T	62.7/40.4
C189	4030017460	S.CER ECJ0EB1E102K	T	63.7/40.4
C190	4030017540	S.CER ECJ0EC1HR75B	T	55/48.3
C191	4030016790	S.CER ECJ0EB1C103K	T	70/40.9
C192	4030017540	S.CER ECJ0EC1HR75B	T	57.7/43
C193	4030017460	S.CER ECJ0EB1E102K	T	70/39.9
C194	4030017530	S.CER ECJ0EC1H0R5B	T	60/44.4
C195	4030016930	S.CER ECJ0EB1A104K	B	39/30
C196	4030017730	S.CER ECJ0EB1E471K	B	38.1/33.2
C197	4030016930	S.CER ECJ0EB1A104K	B	38.1/32.2
C198	4030017730	S.CER ECJ0EB1E471K	B	31.3/38.3
C199	4030016930	S.CER ECJ0EB1A104K	B	31.3/39.2
C200	4030016930	S.CER ECJ0EB1A104K	B	31.3/34
C201	4030017730	S.CER ECJ0EB1E471K	B	31.3/33.1
C202	4030017460	S.CER ECJ0EB1E102K	T	112.1/38.7
C203	4030017460	S.CER ECJ0EB1E102K	B	100.9/47
C205	4030018900	S.CER ECJ0EB0J474K	T	78.4/18.4
C206	4030016930	S.CER ECJ0EB1A104K	T	78.5/16.7
C207	4030017730	S.CER ECJ0EB1E471K	T	61/45.7
C208	4030017460	S.CER ECJ0EB1E102K	T	60/45.7
C209	4030017460	S.CER ECJ0EB1E102K	B	65/52.7
C210	4030017590	S.CER ECJ0EC1H070C	B	57.6/50.3
C211	4030017620	S.CER ECJ0EC1H100C	B	60/51.4
C212	4030017460	S.CER ECJ0EB1E102K	B	63.8/50.8
C214	4030017460	S.CER ECJ0EB1E102K	B	66.8/41.3
C215	4030017390	S.CER ECJ0EC1H180J	B	38.5/47.6
C216	4030017660	S.CER ECJ0EC1H330J	B	43.1/47.6
C217	4030017730	S.CER ECJ0EB1E471K	B	25/32.7
C218	4030016930	S.CER ECJ0EB1A104K	B	25/31.7
C219	4030017650	S.CER ECJ0EC1H270J	B	23/36.3
C220	4030017600	S.CER ECJ0EC1H080C	B	23/38
C221	4030016930	S.CER ECJ0EB1A104K	B	5.6/23.2
C222	4030017030	S.CER ECJ0EB1A273K	B	128.6/45.3
C223	4030016930	S.CER ECJ0EB1A104K	B	126.3/48.2
C224	4030017640	S.CER ECJ0EC1H150J	T	124.2/40.1
C225	4030016790	S.CER ECJ0EB1C103K	T	124.2/37.4
C226	4030017580	S.CER ECJ0EC1H060C	T	124.2/41.1
C227	4030017460	S.CER ECJ0EB1E102K	B	57.6/53.5
C228	4030017460	S.CER ECJ0EB1E102K	B	56.4/53.1
C229	4030017620	S.CER ECJ0EC1H100C	B	52.1/53.1
C230	4030017460	S.CER ECJ0EB1E102K	B	63.5/62.3
C231	4030017360	S.CER ECJ0EC1H030B	B	66.3/52.2
C232	4030017460	S.CER ECJ0EB1E102K	B	68.6/49.5
C235	4030017460	S.CER ECJ0EB1E102K	B	44.4/50.7
C236	4030017390	S.CER ECJ0EC1H180J	B	47.8/48.1
C237	4030017620	S.CER ECJ0EC1H100C	B	47.4/49.4
C240	4030017460	S.CER ECJ0EB1E102K	B	18.9/34.4
C241	4030017360	S.CER ECJ0EC1H030B	B	17/37.7
C242	4030017460	S.CER ECJ0EB1E102K	B	15/34.4
C243	4030017460	S.CER ECJ0EB1E102K	B	18.9/33.5
C244	4030017460	S.CER ECJ0EB1E102K	B	15.7/31.7
C245	4550006780	S.TAN TEESVB2 0J 476M8R	B	5.6/18.7
C246	4030016930	S.CER ECJ0EB1A104K	B	105.1/52.2
C247	4030016930	S.CER ECJ0EB1A104K	B	107/52.9
C248	4030016930	S.CER ECJ0EB1A104K	B	108.1/52
C249	4030018900	S.CER ECJ0EB0J474K	B	121.8/47.4
C250	4030017630	S.CER ECJ0EC1H120J	T	120.4/40.1
C251	4030017400	S.CER ECJ0EC1H220J	B	61.9/64.2
C252	4030017420	S.CER ECJ0EC1H470J	B	62.6/71.1
C253	4030017730	S.CER ECJ0EB1E471K	B	61.6/71.1
C254	4030017420	S.CER ECJ0EC1H470J	B	63.9/69.5
C256	4030017460	S.CER ECJ0EB1E102K	B	59.7/65.5
C257	4030017460	S.CER ECJ0EB1E102K	B	63.4/67.4
C258	4030017460	S.CER ECJ0EB1E102K	T	13.9/32.5
C259	4030017460	S.CER ECJ0EB1E102K	T	10/35
C260	4030017590	S.CER ECJ0EC1H070C	B	14.2/36.3
C261	4030017460	S.CER ECJ0EB1E102K	B	9.5/33.9
C262	4030017460	S.CER ECJ0EB1E102K	B	13.7/37.7

M.=Mounted side (T: Mounted on the Top side, B: Mounted on the Bottom side)
S.=Surface mount

[MAIN-A UNIT] (MDC compatible)

REF NO.	ORDER NO.	DESCRIPTION	M.	H/V LOCATION
C263	4030017490	S.CER C1608 JB 1A 105K-T	T	14.1/33.7
C264	4030017350	S.CER ECJ0EC1H020B	B	8.4/38.6
C265	4030017420	S.CER ECJ0EC1H470J	B	8.6/36.3
C266	4030017460	S.CER ECJ0EB1E102K	B	9.5/36.3
C267	4030017460	S.CER ECJ0EB1E102K	B	63.9/70.5
C268	4030017640	S.CER ECJ0EC1H150J	B	68.2/69.1
C269	4030017390	S.CER ECJ0EC1H180J [USA-02], [F5061D]	B	69.7/69.1
	4030017650	S.CER ECJ0EC1H270J [EXP-02], [EUR-02]	B	69.7/69.1
C270	4030017390	S.CER ECJ0EC1H180J	B	71.2/69
C271	4030017390	S.CER ECJ0EC1H180J [EXP-02], [EUR-02]	T	74.3/71.7
	4030017400	S.CER ECJ0EC1H220J [USA-02], [F5061D]	T	74.3/71.7
C272	4030016930	S.CER ECJ0EB1A104K	T	7.9/39.5
C273	4030016930	S.CER ECJ0EB1A104K	T	9.5/39.5
C274	4030017460	S.CER ECJ0EB1E102K	T	7.4/41.2
C275	4030016930	S.CER ECJ0EB1A104K	T	15/41
C276	4030017620	S.CER ECJ0EC1H100C	B	10.5/41
C277	4030017460	S.CER ECJ0EB1E102K	T	14/41
C278	4030017340	S.CER ECJ0EC1H010B	B	8.9/43.6
C279	4030017640	S.CER ECJ0EC1H150J	B	6.9/44.2
C280	4030017550	S.CER ECJ0EC1H1R5B	B	9.4/46.1
C281	4030017420	S.CER ECJ0EC1H470J	T	97.9/34.2
C282	4030017420	S.CER ECJ0EC1H470J	T	102.1/40
C283	4030017420	S.CER ECJ0EC1H470J	B	97.4/44.6
C284	4030017420	S.CER ECJ0EC1H470J	T	94.8/35.5
C285	4030017420	S.CER ECJ0EC1H470J	B	94.2/44.4
C286	4030017420	S.CER ECJ0EC1H470J	T	92.1/43.3
C287	4030017420	S.CER ECJ0EC1H470J	T	92.1/41.6
C288	4030017460	S.CER ECJ0EB1E102K	B	4.8/46.5
C290	4030017400	S.CER ECJ0EC1H220J	T	74.3/73.6
C291	4030017730	S.CER ECJ0EB1E471K	T	69.3/76.1
C292	4550000560	S.TAN TEESVA 1V 334M8R	T	67.6/74.4
C294	4030017420	S.CER ECJ0EC1H470J	T	70.4/76.1
C295	4030017420	S.CER ECJ0EC1H470J	T	56.7/67.3
C296	4510008530	S.ELE EEE1HA2R2SR	T	59.6/80
C297	4030017460	S.CER ECJ0EB1E102K	T	56.7/68.3
C299	4030017640	S.CER ECJ0EC1H150J	B	6.9/47.9
C301	4030017580	S.CER ECJ0EC1H060C	B	13.2/49.5
C302	4030017460	S.CER ECJ0EB1E102K	B	4.4/44.4
C303	4030016930	S.CER ECJ0EB1A104K	B	129.6/32
C304	4030017420	S.CER ECJ0EC1H470J	B	90/43.4
C305	4030011140	S.CER GRM31M2C2H120JV01L	T	27.6/78.7
C306	4030011120	S.CER GRM31M2C2H100JV01L	T	27.6/76.1
C307	4030011120	S.CER GRM31M2C2H100JV01L	T	27.7/71.8
C308	4030011070	S.CER GRM31M2C2H5R0CY21L [USA-02], [F5061D]	T	27.7/69.2
	4030011140	S.CER GRM31M2C2H120JV01L [EXP-02], [EUR-02]	T	27.7/69.2
C309	4030017460	S.CER ECJ0EB1E102K	T	71.5/76.1
C310	4030017420	S.CER ECJ0EC1H470J	T	43/76.1
C311	4030017460	S.CER ECJ0EB1E102K	T	44.1/76.1
C312	4030017730	S.CER ECJ0EB1E471K	T	45.3/76.1
C313	4510008680	S.ELE EEE1EA220SP	T	51.7/77.7
C314	4030017730	S.CER ECJ0EB1E471K	B	40.2/68.3
C315	4030017460	S.CER ECJ0EB1E102K	T	55.7/73.6
C316	4030016790	S.CER ECJ0EB1C103K	T	54.1/72.6
C317	4030011600	S.CER C1608 JB 1E 104K-T	T	54.1/67
C318	4030017460	S.CER ECJ0EB1E102K [USA-02], [F5061D] only	T	35.1/63.3
C319	4030017460	S.CER ECJ0EB1E102K [USA-02], [F5061D] only	T	47.3/67.4
C320	4030017580	S.CER ECJ0EC1H060C	B	15/52.7
C321	4030017460	S.CER ECJ0EB1E102K	B	14.9/49.5
C322	4030017600	S.CER ECJ0EC1H080C	B	19.3/52
C323	4030017570	S.CER ECJ0EC1H040B	B	20/49.6
C324	4030017420	S.CER ECJ0EC1H470J	B	90/41.8
C325	4030017460	S.CER ECJ0EB1E102K	T	72.5/64.9
C326	4030017420	S.CER ECJ0EC1H470J	B	46.2/64.3
C327	4030017460	S.CER ECJ0EB1E102K	B	84.2/79
C328	4030017460	S.CER ECJ0EB1E102K	B	83.2/79
C329	4030017460	S.CER ECJ0EB1E102K	B	82.1/79
C330	4030017460	S.CER ECJ0EB1E102K	B	81/79
C331	4030017460	S.CER ECJ0EB1E102K	B	80/79
C332	4030016930	S.CER ECJ0EB1A104K	T	51.9/71.9
C334	4030017460	S.CER ECJ0EB1E102K	T	49.5/68.6
C335	4030017460	S.CER ECJ0EB1E102K	T	53.8/63.2
C336	4030017580	S.CER ECJ0EC1H060C	B	20.8/52
C337	4030017390	S.CER ECJ0EC1H180J	B	25.1/51.2
C338	4510008600	S.ELE EEE1CA4R7NR	T	79.1/69.1
C339	4030017460	S.CER ECJ0EB1E102K	T	79.1/62.1
C340	4030017460	S.CER ECJ0EB1E102K	T	37.5/20.8
C341	4030016790	S.CER ECJ0EB1C103K	T	41.9/19.4
C342	4030017200	S.CER GRM31BR32J102KY01L	T	25.3/62.5
C343	4030011270	S.CER GRM31M2C2H200JV01L	T	22.1/63.9
C345	4030011170	S.CER GRM31M2C2H180JV01L	T	17.3/57.4
C346	4030011170	S.CER GRM31M2C2H180JV01L	T	30.2/62.8
C347	4030017520	S.CER ECJ0EC1H0R3B	B	25.4/63
C348	4030017460	S.CER ECJ0EB1E102K	B	31.5/63.4
C349	4030016930	S.CER ECJ0EB1A104K	T	100.5/63.5
C350	4550005980	S.TAN TEESVA 1A 475M8R	T	101.6/62
C351	4030016930	S.CER ECJ0EB1A104K	T	110.6/67.4
C352	4030017460	S.CER ECJ0EB1E102K	B	124.6/59.6
C353	4550005980	S.TAN TEESVA 1A 475M8R	B	124.5/61.3
C354	4550006250	S.TAN TEESVA 1A 106M8R	B	112.9/61.7
C355	4030017420	S.CER ECJ0EC1H470J	B	112.6/60.1
C356	4030011270	S.CER GRM31M2C2H200JV01L	T	14.7/62.9
C357	4030011270	S.CER GRM31M2C2H200JV01L	T	10.4/62.9
C358	4030007030	S.CER C1608 CH 1H 150J-T	B	10.6/56.4
C359	4030011340	S.CER C1608 CH 1H 471J-T	B	9.4/56.4
C360	4030017460	S.CER ECJ0EB1E102K	B	4/53
C361	4030017460	S.CER ECJ0EB1E102K	T	103.9/53.5

[MAIN-A UNIT] (MDC compatible)

REF NO.	ORDER NO.	DESCRIPTION	M.	H/V LOCATION
C362	4030017460	S.CER ECJ0EB1E102K	T	108.2/24.5
C363	4510008540	S.ELE EEE1CA100SR	T	139.1/31.9
C365	4550007650	S.TAN F931V105MAABMA	B	106.7/65
C366	4550007650	S.TAN F931V105MAABMA	B	104.2/65
C367	4550007650	S.TAN F931V105MAABMA	B	101.6/65
C368	4550007650	S.TAN F931V105MAABMA	B	99.5/64.6
C369	4030011270	S.CER GRM31M2C2H200JV01L	T	15.8/78.9
C370	4030011270	S.CER GRM31M2C2H200JV01L	T	15.8/83.1
C371	4030017460	S.CER ECJ0EB1E102K	B	4.1/81.6
C372	4030006850	S.CER C1608 JB 1H 471K-T	B	8.3/77.1
C373	4030016930	S.CER ECJ0EB1A104K	B	130.9/51.7
C374	4030016930	S.CER ECJ0EB1A104K	B	133/51.3
C375	4030016930	S.CER ECJ0EB1A104K	B	132.4/54.6
C377	4030017460	S.CER ECJ0EB1E102K	T	105.9/51.9
C378	4030017460	S.CER ECJ0EB1E102K	T	108.2/78
C379	4030016930	S.CER ECJ0EB1A104K	B	108.4/80.3
C380	4030017460	S.CER ECJ0EB1E102K	T	119.9/83.2
C381	4030016790	S.CER ECJ0EB1C103K	B	135.9/70.5
C383	4030017460	S.CER ECJ0EB1E102K	B	135.9/71.5
C384	4510008870	S.ELE EEE1AA471UP	T	129.9/64.9
C386	4030016930	S.CER ECJ0EB1A104K	B	138.8/53.7
C387	4030017720	S.CER ECJ0EB1H331K	B	135.4/51.3
C388	4030018860	S.CER ECJ0EB0J105K	B	138.6/52.2
C389	4030016930	S.CER ECJ0EB1A104K	B	139.1/49.4
C390	4030016930	S.CER ECJ0EB1A104K	B	137.8/55.4
C391	4030016930	S.CER ECJ0EB1A104K	T	101.8/82.3
C392	4030017460	S.CER ECJ0EB1E102K	B	131/74.6
C393	4030017460	S.CER ECJ0EB1E102K	B	99/79
C394	4030017420	S.CER ECJ0EC1H470J	B	115.4/68
C395	4030017460	S.CER ECJ0EB1E102K	B	128.2/76.5
C397	4030017460	S.CER ECJ0EB1E102K	B	99.8/86.3
C398	4030017420	S.CER ECJ0EC1H470J	B	100.8/86.3
C399	4030018860	S.CER ECJ0EB0J105K	B	136.3/37.1
C400	4030016930	S.CER ECJ0EB1A104K	B	139.7/35.3
C411	4510008780	S.ELE EEE1EA471P	T	117.2/63.6
C412	4510008780	S.ELE EEE1EA471P	T	132.7/54.3
C413	4030018900	S.CER ECJ0EB0J474K	B	135.1/46.8
C414	4510008540	S.ELE EEE1CA100SR	T	118.7/50.5
C415	4030016930	S.CER ECJ0EB1A104K	B	103/23.8
C416	4030016930	S.CER ECJ0EB1A104K	B	120.3/51.6
C417	4030016790	S.CER ECJ0EB1C103K	B	115.6/52.8
C418	4030017460	S.CER ECJ0EB1E102K	T	109.6/54.5
C419	4030016790	S.CER ECJ0EB1C103K	T	42.9/39.2
C420	4030017420	S.CER ECJ0EC1H470J	T	41/37.4
C421	4030016930	S.CER ECJ0EB1A104K	B	36/24.7
C422	4030016790	S.CER ECJ0EB1C103K	T	43.1/31.9
C423	4030017420	S.CER ECJ0EC1H470J	T	39.9/35.3
C424	4030016930	S.CER ECJ0EB1A104K	T	38.9/32.2
C425	4030017460	S.CER ECJ0EB1E102K	B	134.8/66.1
C426	4030018860	S.CER ECJ0EB0J105K	B	110/12.1
C427	4030017460	S.CER ECJ0EB1E102K	B	109.1/10.4
C430	4030017570	S.CER ECJ0EC1H040B	T	78.2/44.8
C431	4030017590	S.CER ECJ0EC1H070C	T	23/21.9
C432	4030016930	S.CER ECJ0EB1A104K	T	22.4/10.5
C433	4030016930	S.CER ECJ0EB1A104K	B	23/7.3
C434	4030017650	S.CER ECJ0EC1H270J	B	28.3/5.6
C435	4030017040	S.CER ECJ0EB1A333K	B	29.2/7.3
C436	4030016930	S.CER ECJ0EB1A104K	B	21.2/5.6
C437	4030016930	S.CER ECJ0EB1A104K	B	27.6/8.7
C438	4030016930	S.CER ECJ0EB1A104K	B	31.6/5.7
C440	4030016930	S.CER ECJ0EB1A104K	B	22.1/8.9
C441	4030017610	S.CER ECJ0EC1H090C	B	25.9/39.5
C451	4030018860	S.CER ECJ0EB0J105K	B	93.8/6.5
J1	6510025220	S.CNR AXK540145J	T	124.5/9.7
J2	6510025220	S.CNR AXK540145J	T	101.5/9.7
J3	6510021301	S.CNR 52365-1071	T	90.3/62.6
J5	6510023091	S.CNR 20FLT-SM2-TB (LF) (SN)	T	108.3/81.8
J7	6450000140	CNR HSJ0807-01-010		
J10	6510023091	S.CNR 20FLT-SM2-TB (LF) (SN)	T	71/7
W1	7120000470	JMP ERDS2T0		
W2	8900016250	CBL OPC-1701 <CMI>T/H!		
EP1	6910015600	S.BEA ACZ1005Y-241 (240)	B	39.8/8.1
EP2	6910015370	S.BEA ACZ1005Y-102-T	B	50.1/12.4
EP3	6910015370	S.BEA ACZ1005Y-102-T	T	82.6/37.1
EP4	6910010280	BEA HF70BB9.5X10.4X4.9		
EP5	6910010280	BEA HF70BB9.5X10.4X4.9		
EP6	6910011560	BEA HF70BB4.5X5X1.6		
EP8	0880002600	UBD EX-2887 [F5061D] only		

M.=Mounted side (T: Mounted on the Top side, B: Mounted on the Bottom side)
S.=Surface mount

[CONNECT UNIT]

REF NO.	ORDER NO.	DESCRIPTION		M.	H/V LOCATION
C601	4030017420	S.CER	ECJ0EC1H470J	T	12.7/4.6
C602	4030017420	S.CER	ECJ0EC1H470J	T	15.4/4.6
C603	4030017420	S.CER	ECJ0EC1H470J	T	18.2/4.6
C604	4030017420	S.CER	ECJ0EC1H470J	T	19.6/4.6
C605	4030017420	S.CER	ECJ0EC1H470J	T	20.9/4.6
C606	4030017420	S.CER	ECJ0EC1H470J	T	25.1/4.6
C607	4030017420	S.CER	ECJ0EC1H470J	T	37.5/13.2
C608	4030017420	S.CER	ECJ0EC1H470J	T	16.8/4.6
C609	4030017420	S.CER	ECJ0EC1H470J	T	40.3/13.2
C610	4030017420	S.CER	ECJ0EC1H470J	T	41.7/4.6
J601	6510025240	S.CNR	IMSA-9631S-20Y912	B	32.2/16.2
J602	6510023210	CNR	CD6125SA1J0 <CVI>		
W601	8900012711	CBL	OPC-1297A (P0.5,N20,L62)		

M.=Mounted side (T: Mounted on the Top side, B: Mounted on the Bottom side)
S.=Surface mount

BOARD LAYOUTS

The combination of this side and the bottom side shows the board layout in the same configuration as the actual P.C.Board.

• Other than "MDC compatible"

• HM-152 (TOP VIEW)

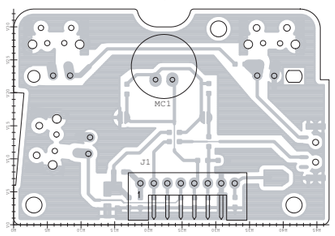

• CONNECT UNIT (TOP VIEW)

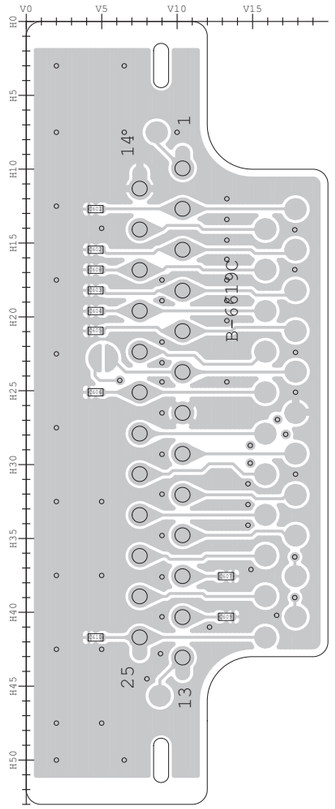

• FRONT UNIT (TOP VIEW)

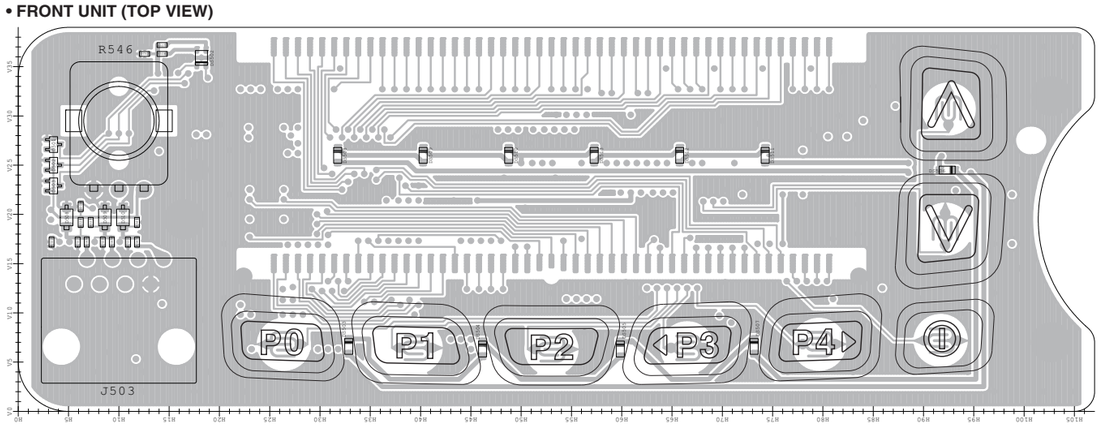

J503	
8V	CLO
AFO	PTT
MICE	MIC
GND	CLI

• MAIN UNIT (TOP VIEW)

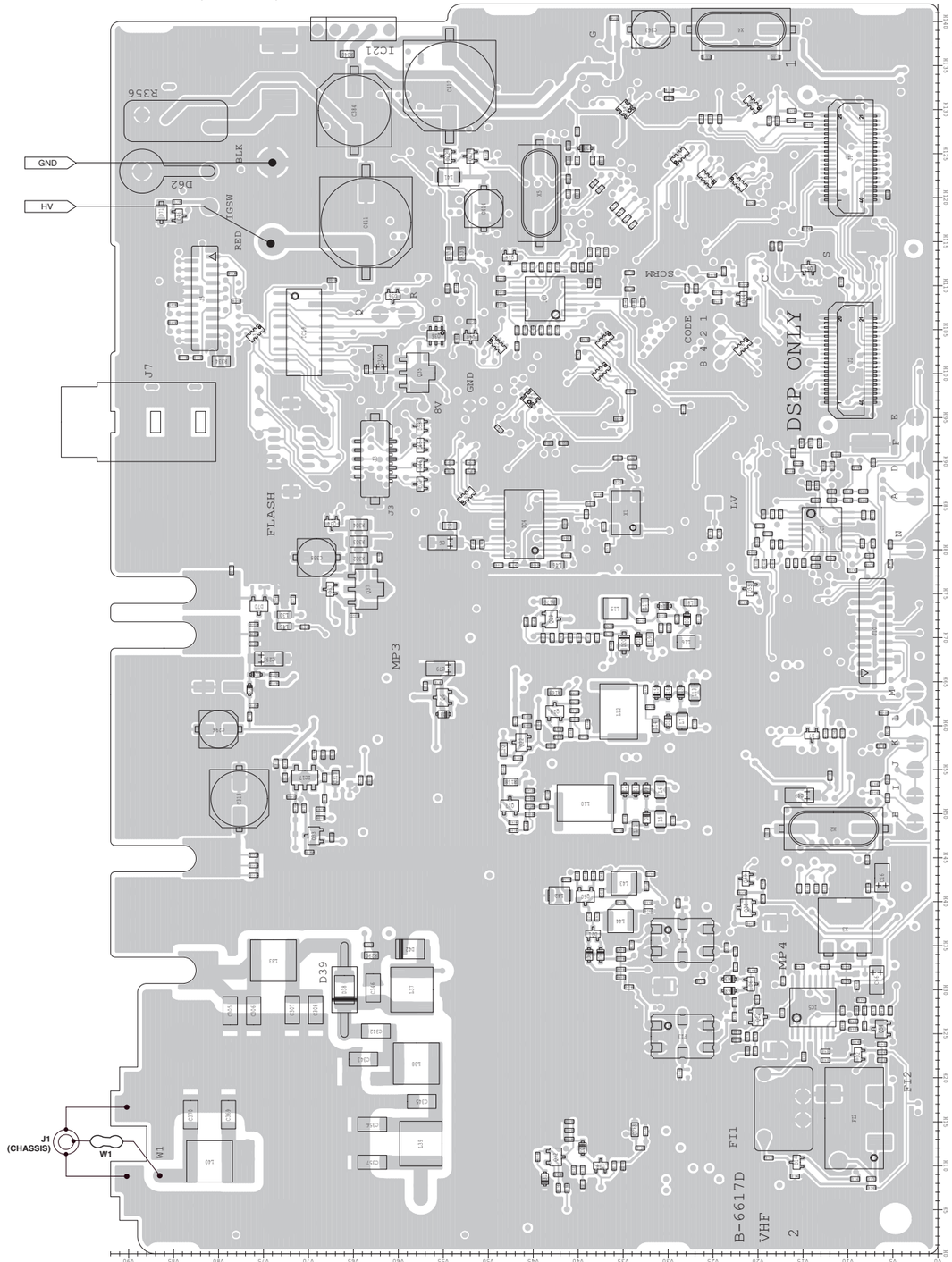

J1	
DASW	NC
PFMF	CCK
EMPH	CSI
GND	CSO
OPT3	NC
OPT2	CIRQ
OPT1	CCS
SIGO	REM
BUSY	NC
NC	AFOUT
NC	DISC
NC	RMUT
NC	BEPO
MCIN	AFON
NC	MMUTI
MCOT	NC
PTTO	VCC
PTTI	+5V
GND	GND
NC	NC

J2	
GND	GND
GND	CCK
NC	CSI
GND	CSO
OPT3	NC
OPT2	CIRQ
OPT1	CCS
NC	NC
NC	DAFO
NC	NC
VREF	DISC
NC	NC
DMI	NC
NC	NC
DMO	NC
NC	NC
NC	8V
NC	+5V
GND	GND
D_IF	D_IF

J10	
VCC	VCC
GND	NC
MFDA	8V
POSW	FMDA
MCIN	MICE
AFO	MICE
SP-	NC
NC	SP-
SP+	SP+
GND	GND

• Other than "MDC compatible"

The combination of this side and the bottom side shows the board layout in the same configuration as the actual P.C.Board.

• MAIN UNIT (BOTTOM VIEW)

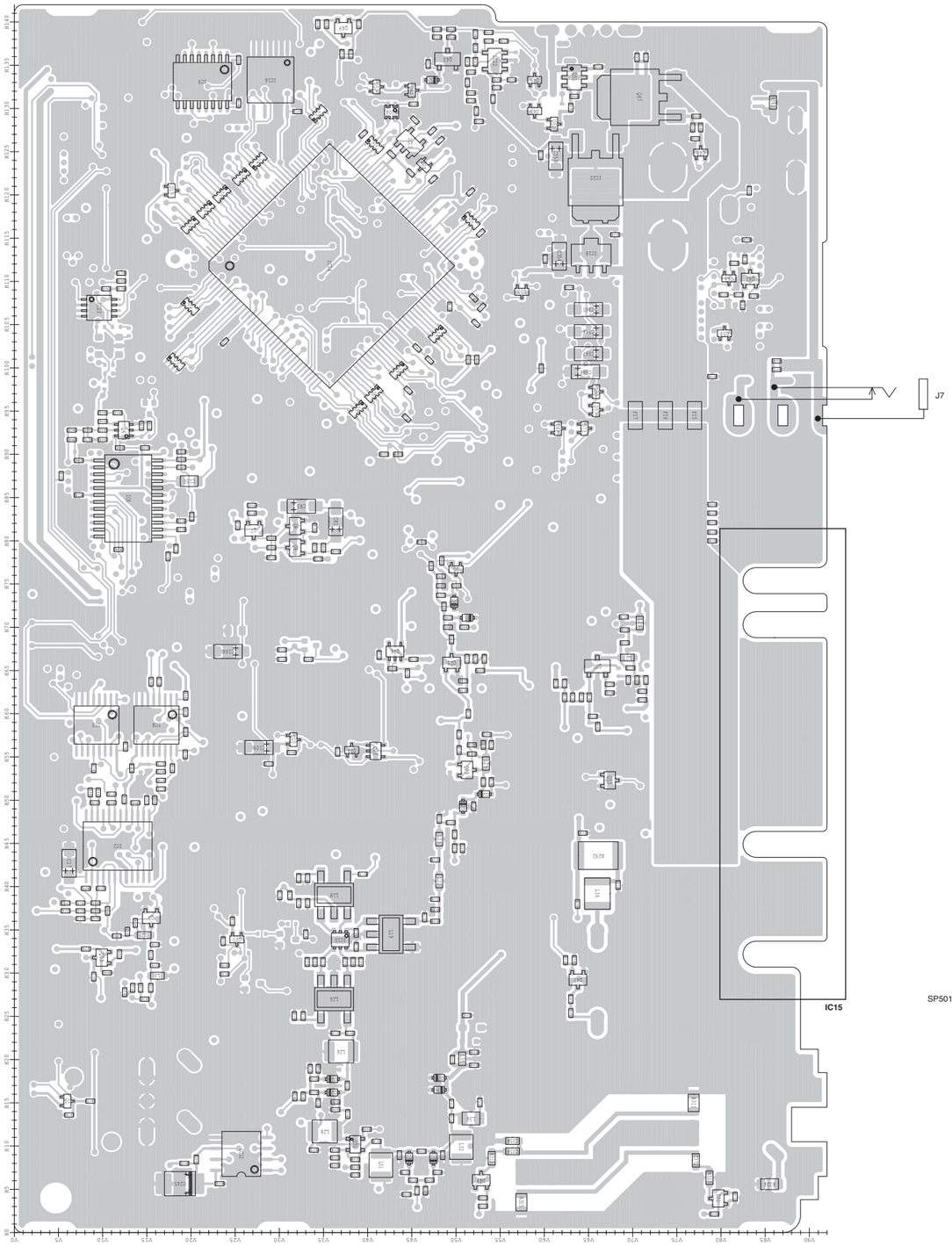

• CONNECT UNIT (BOTTOM VIEW)

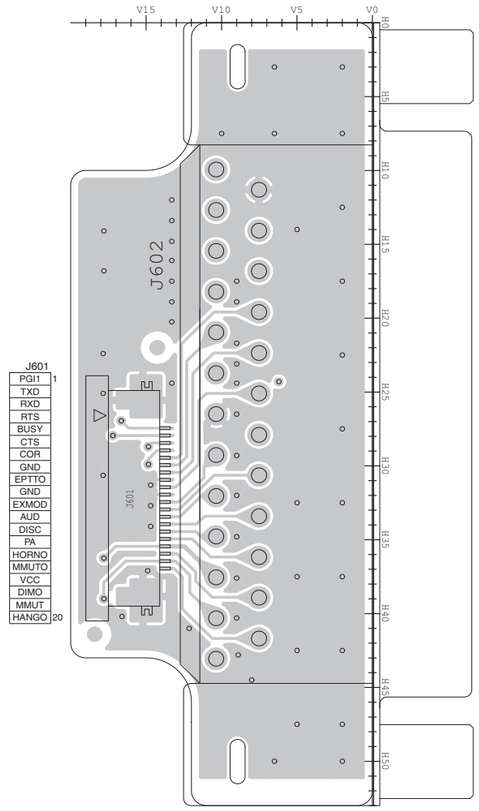

• HM-152 (BOTTOM VIEW)

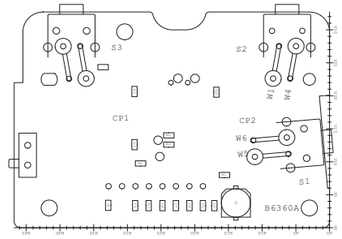

• FRONT UNIT (BOTTOM VIEW)

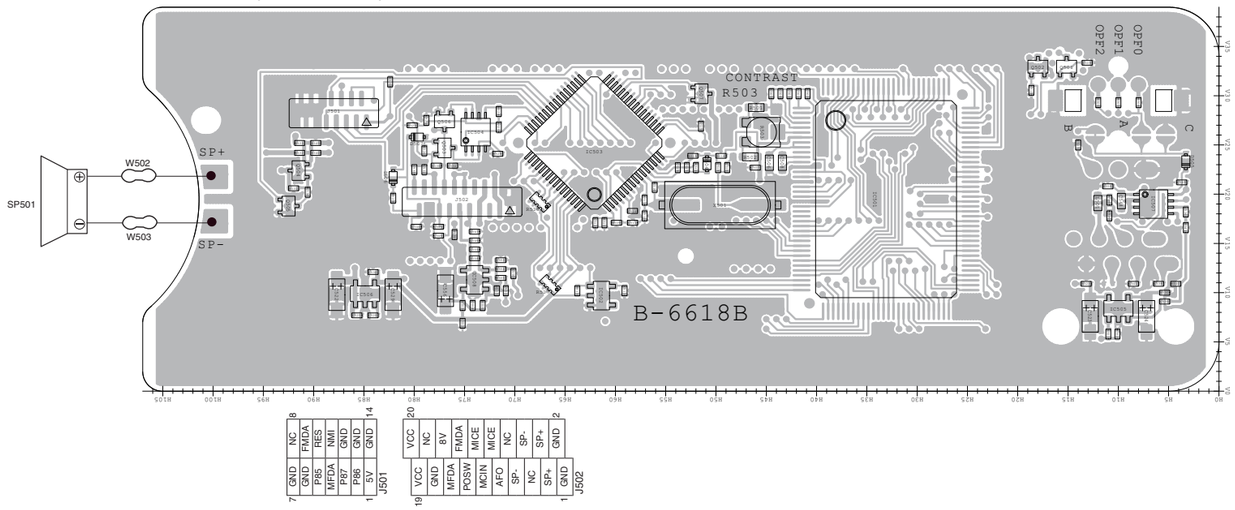

• MDC compatible

The combination of this side and the bottom side shows the board layout in the same configuration as the actual P.C.Board.

• HM-152 (TOP VIEW)

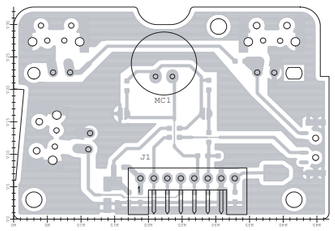

• CONNECT UNIT (TOP VIEW)

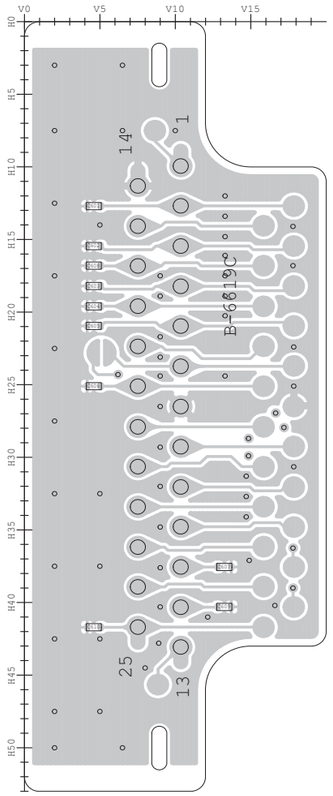

• FRONT UNIT (TOP VIEW)

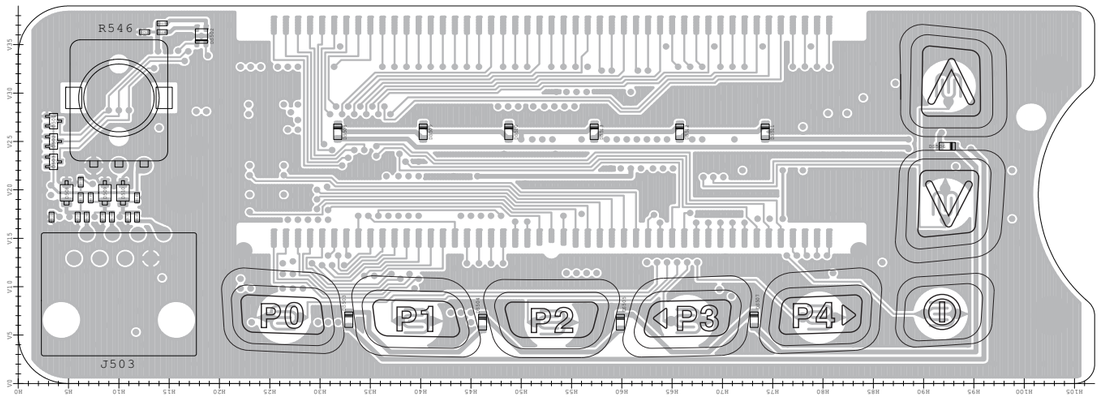

J503			
1	8V	CLO	2
	AFO	PTT	
	MICE	MIC	
7	GND	CLI	8

• MAIN-A UNIT (TOP VIEW)

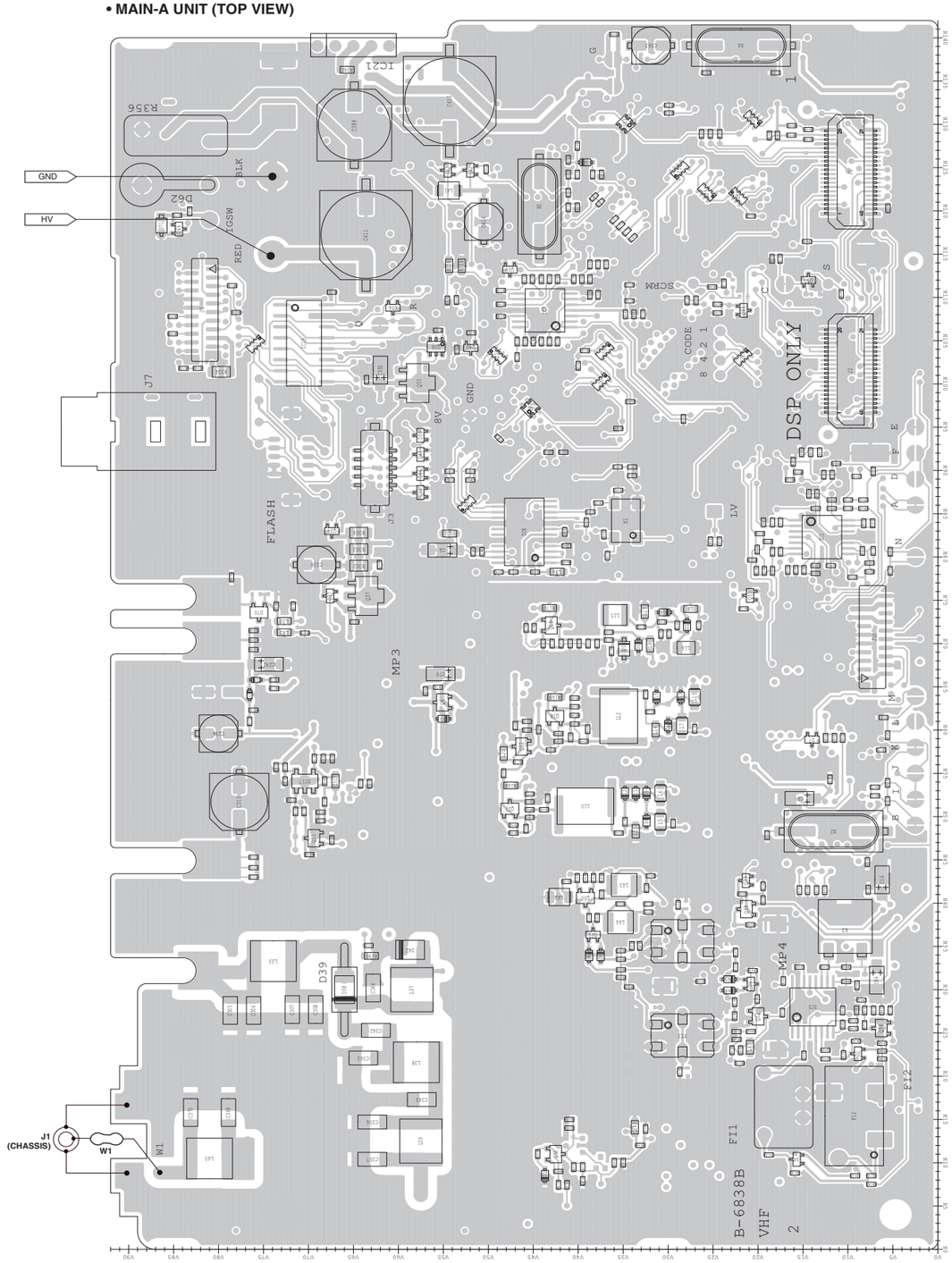

J1			
20	DASW	NC	21
	PFMF	CCK	
	EMPH	CSI	
	GND	CSO	
	OPT3	NC	
	OPT2	CIRQ	
	OPT1	CCS	
	SIGO	REM	
	BUSY	NC	
	NC	AFOUT	
	NC	DISC	
	NC	RMUT	
	NC	BEPO	
	MCIN	AFON	
	NC	MMUTI	
	MCOT	NC	
	PTTO	VCC	
	PTTI	+5V	
	GND	GND	
1	NC	NC	40

J2			
20	GND	GND	21
	GND	CCK	
	NC	CSI	
	GND	CSO	
	OPT3	NC	
	OPT2	CIRQ	
	OPT1	CCS	
	NC	NC	
	NC	DAFO	
	NC	NC	
	VREF	DISC	
	NC	NC	
	DMI	NC	
	NC	NC	
	DMO	NC	
	NC	NC	
	NC	8V	
	NC	+5V	
	GND	GND	
1	D_IF	D_IF	40

J10			
		VCC	20
19	VCC	NC	
	GND	8V	
	MFDA	FMDA	
	POSW	MICE	
	MCIN	MICE	
	AFO	NC	
	SP-	SP-	
	NC	SP+	
	SP+	GND	2
1	GND		

• MDC compatible

The combination of this side and the bottom side shows the board layout in the same configuration as the actual P.C.Board.

• MAIN-A UNIT (BOTTOM VIEW)

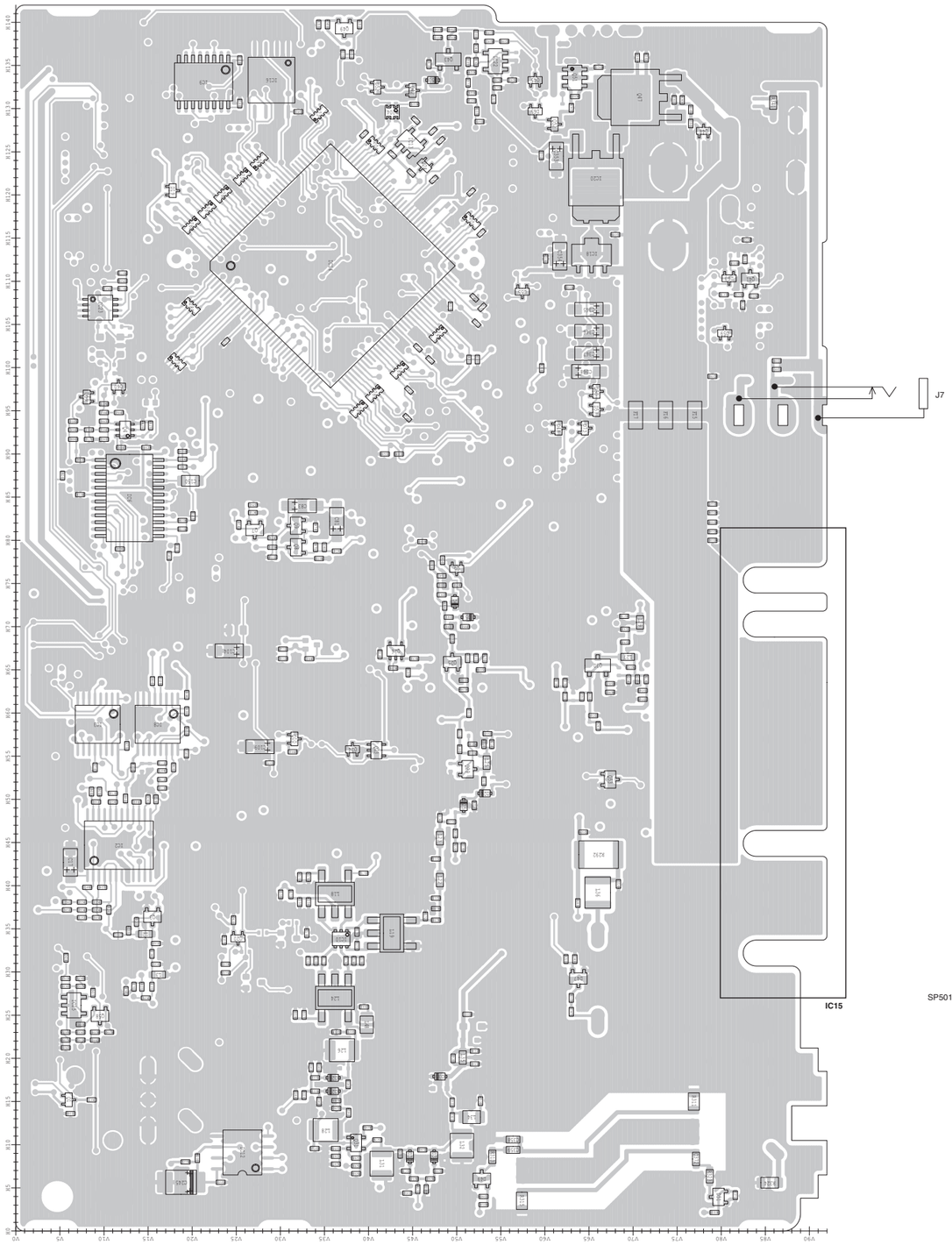

• CONNECT UNIT (BOTTOM VIEW)

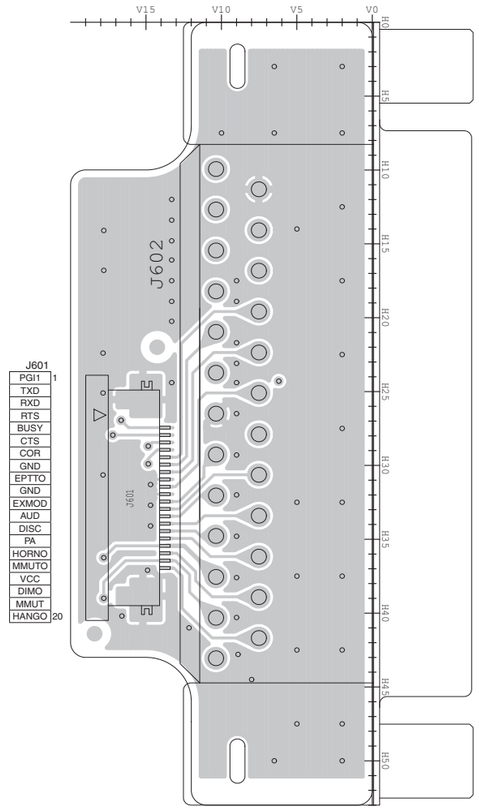

• HM-152 (BOTTOM VIEW)

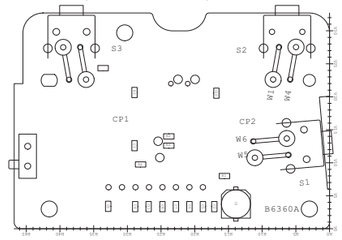

• FRONT UNIT (BOTTOM VIEW)

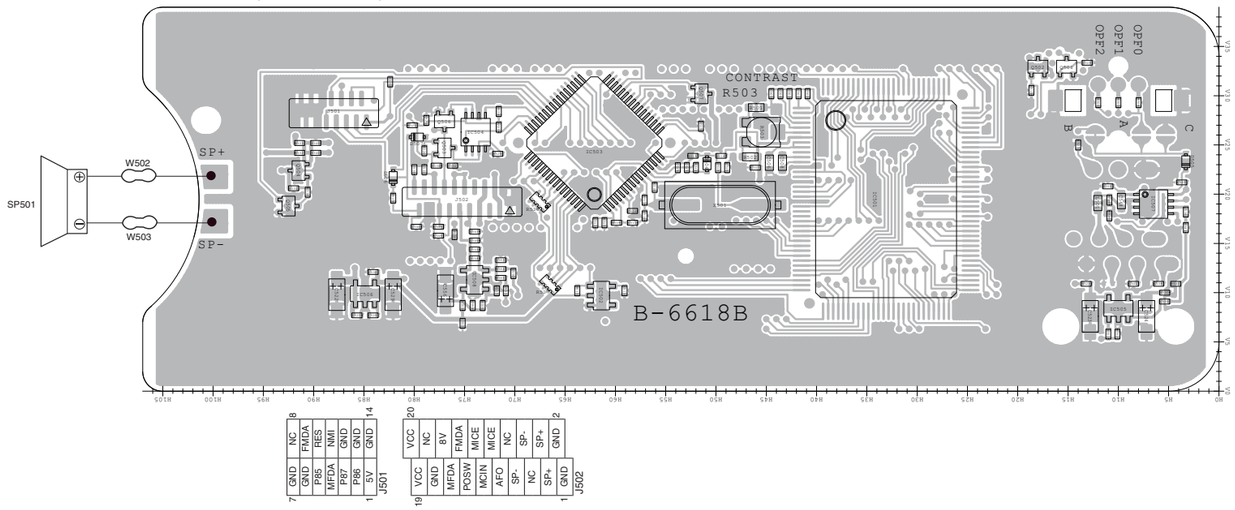

VOLTAGE DIAGRAM

FRONT UNIT

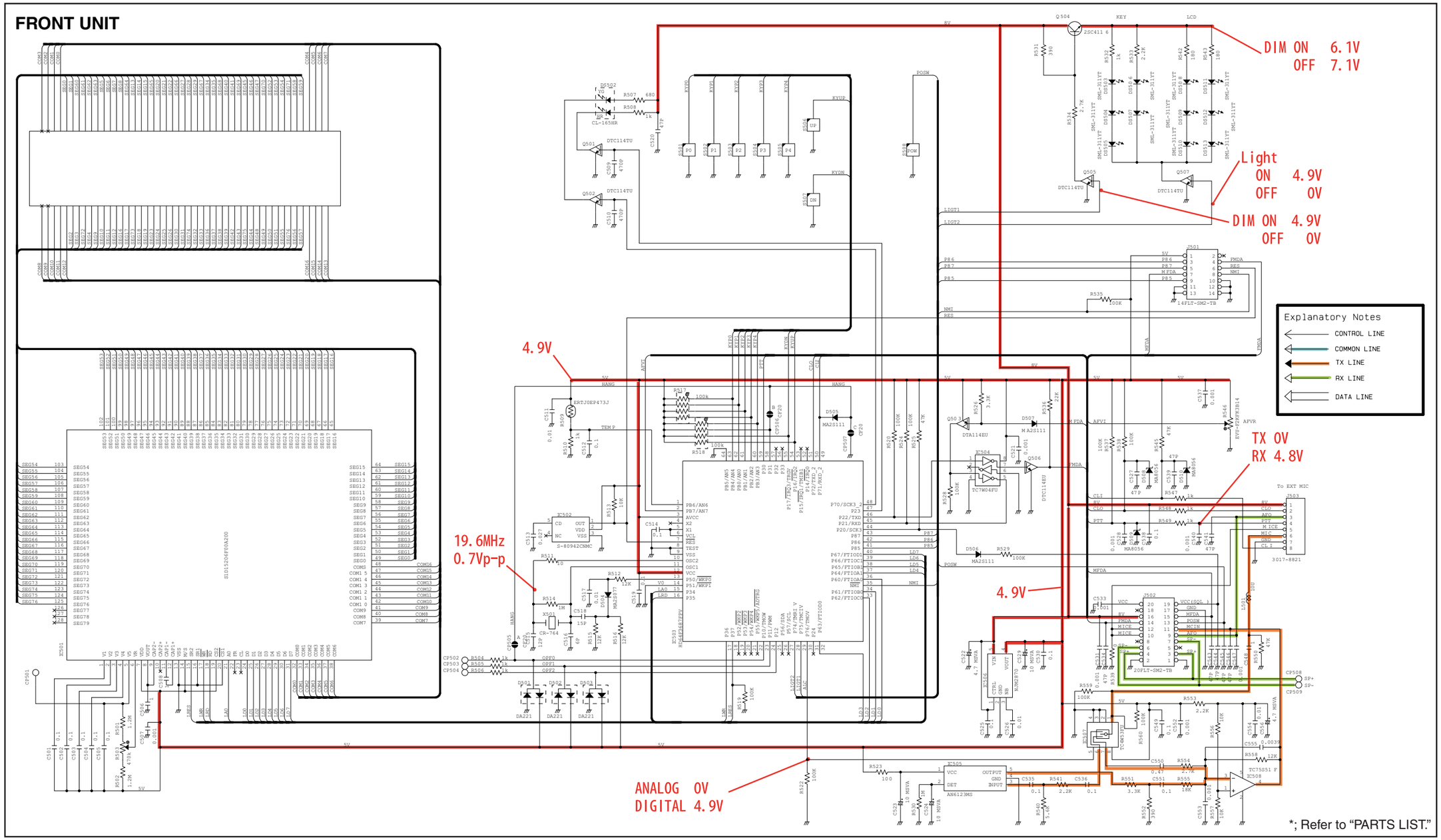

• **Other than "MDC compatible"**

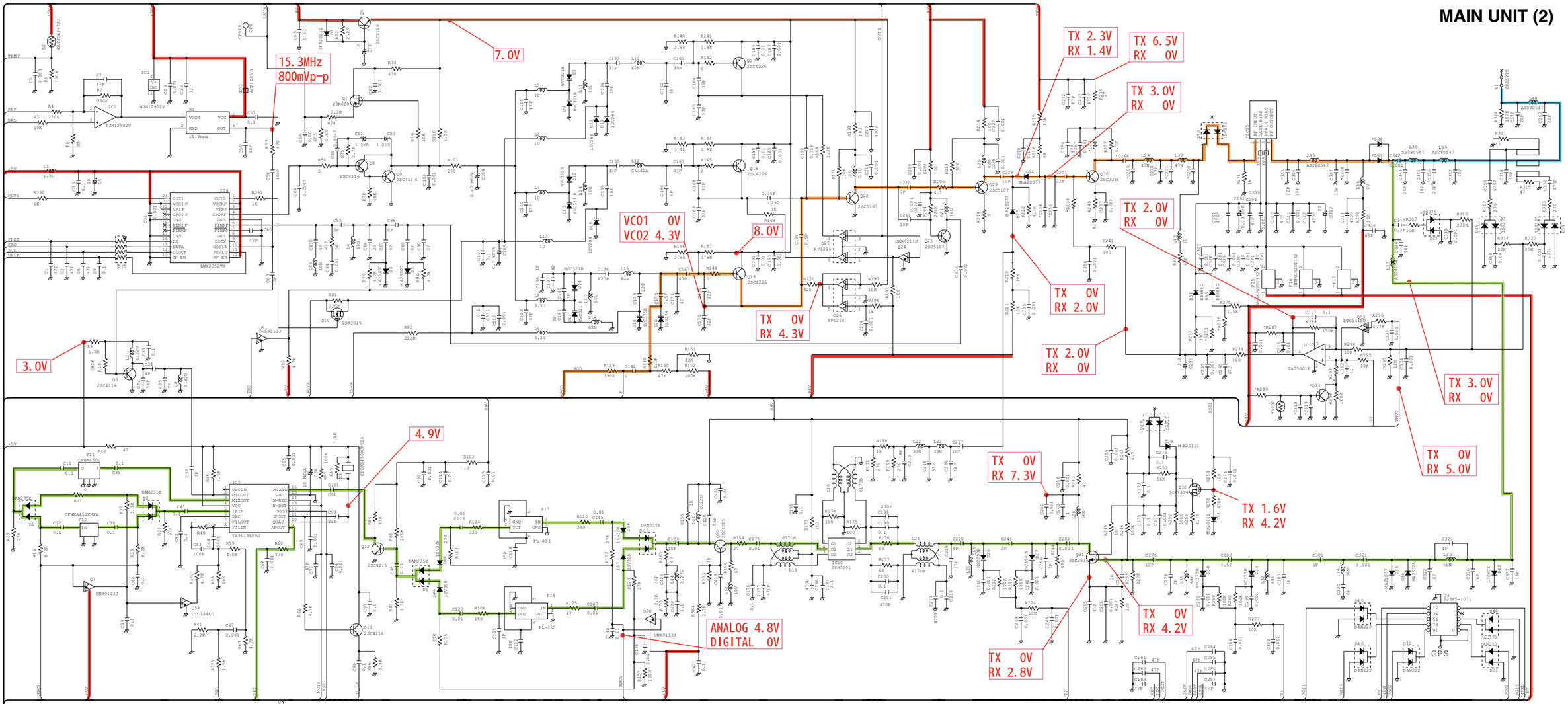

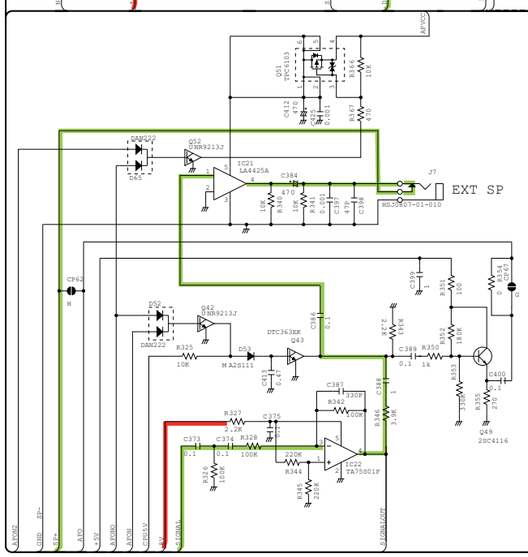

Explanatory Notes

- CONTROL LINE
- COMMON LINE
- TX LINE
- RX LINE
- DATA LINE

TO MAIN UNIT (1)

*; Refer to "PARTS LIST."

• **Other than "MDC compatible"**

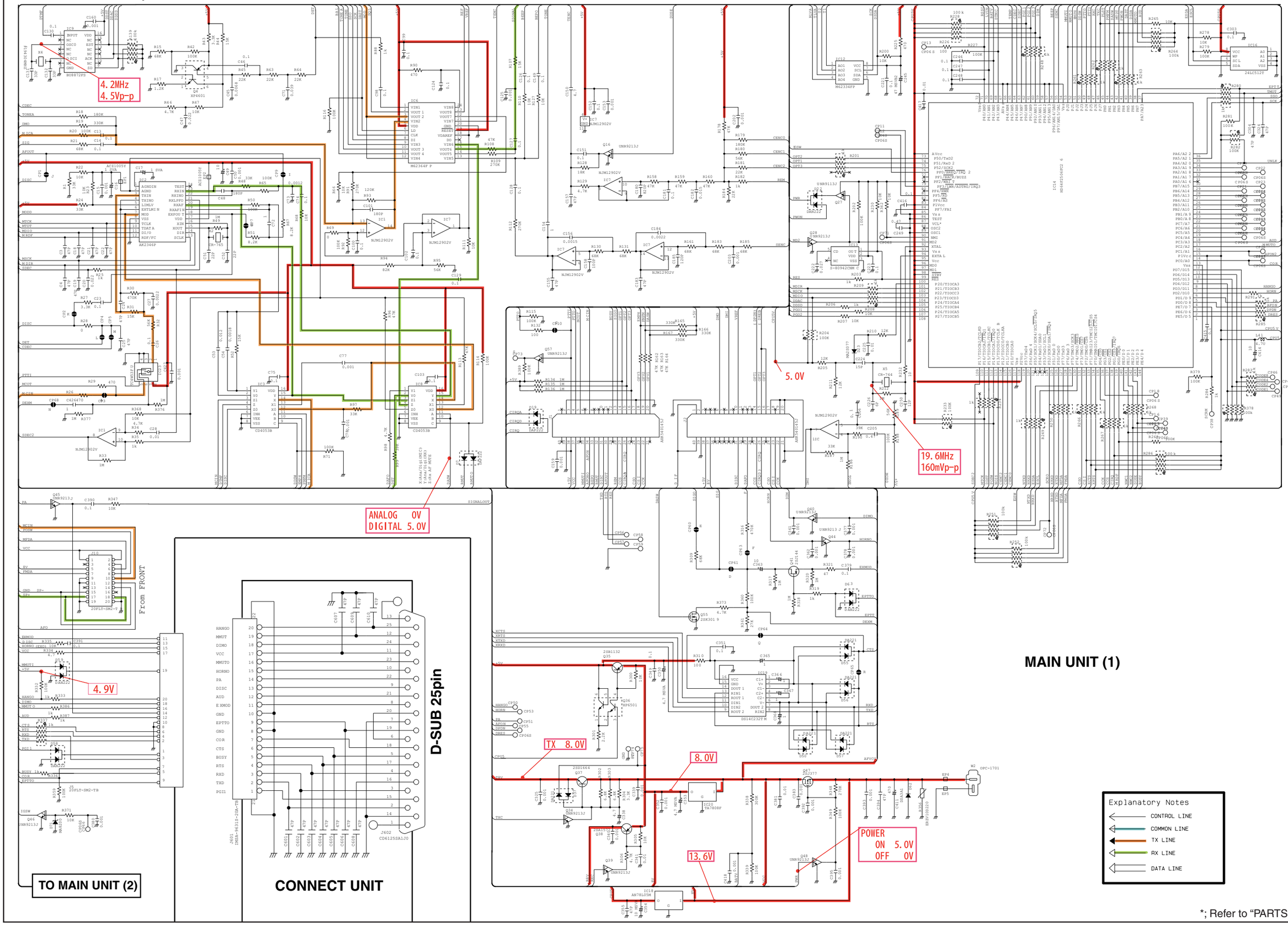

*; Refer to "PARTS LIST."

• **MDC compatible**

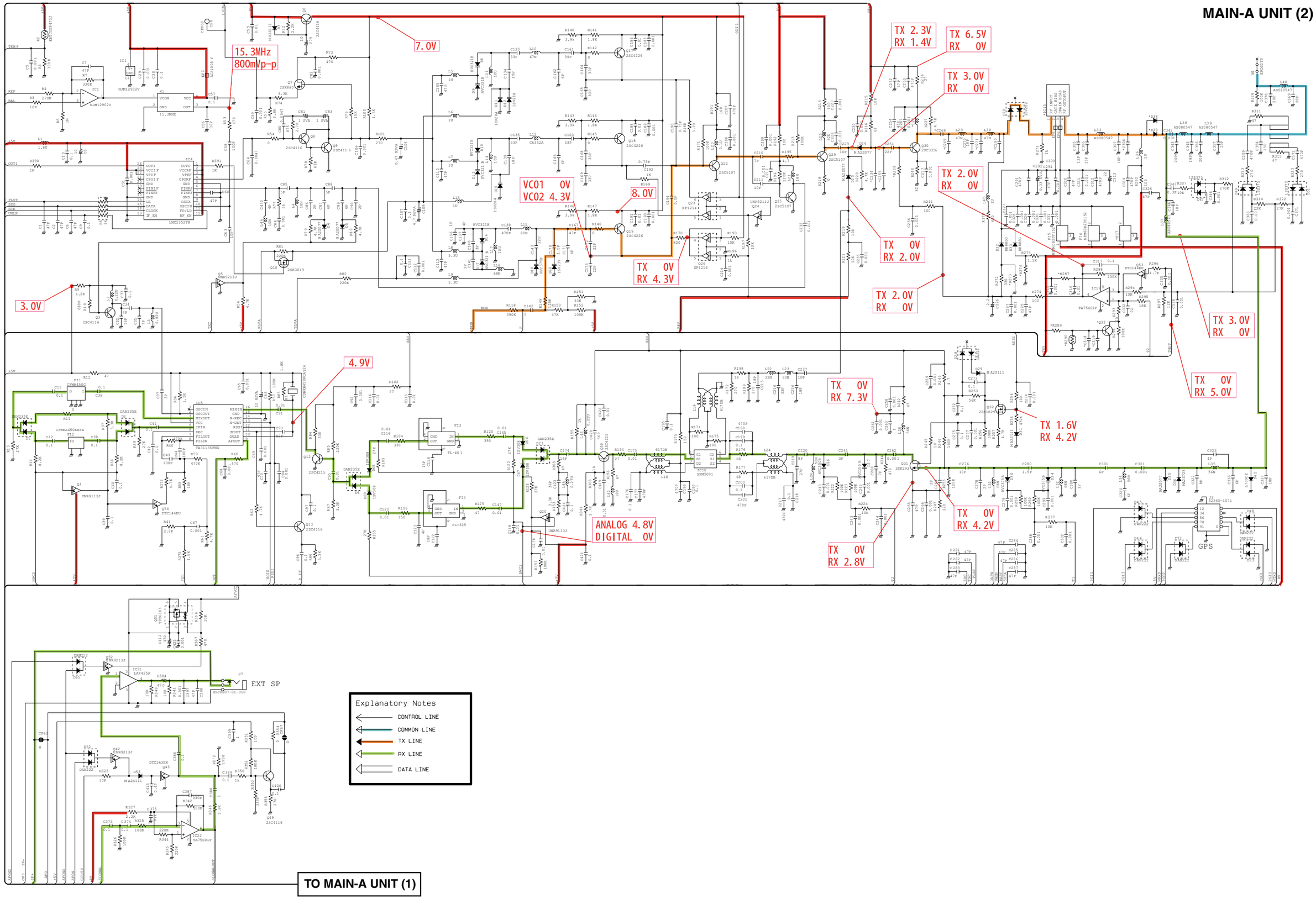

• **MDC compatible**

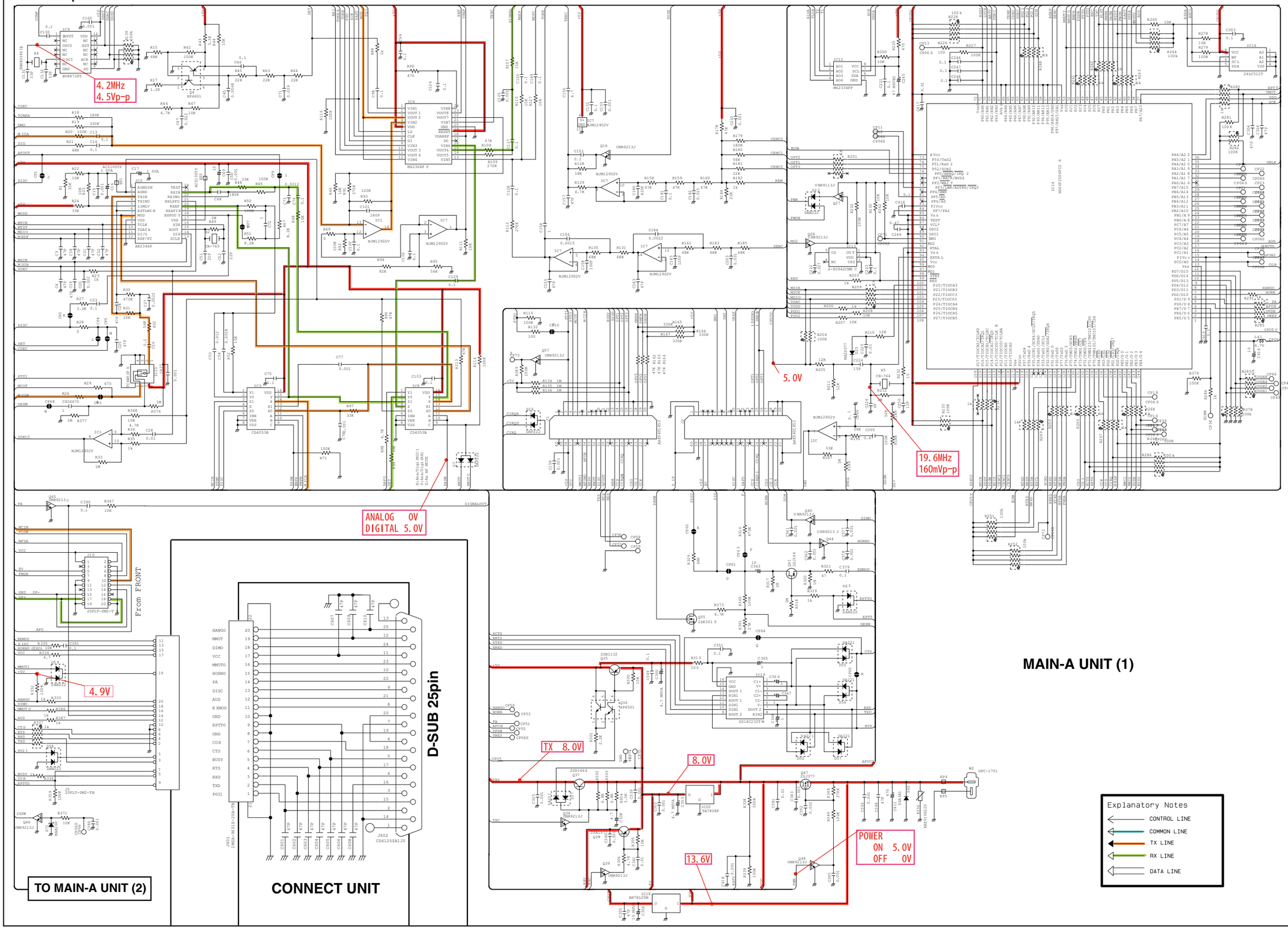

Nov. 2007

SERVICE MANUAL ADDENDUM

IC-F5061 IC-F5062 IC-F5063

CONTENTS

PARTS LIST 1
FREQUENCY ADJUSTMENT for "B-6617D" 2
BOARD LAYOUTS 10
VOLTAGE DIAGRAM 12

6-2 FREQUENCY ADJUSTMENT

Select an adjustment item using [↑] / [↓] keys, then set to the specified value using [←] / [→] keys on the connected PC's keyboard.

ADJUSTMENT		ADJUSTMENT CONDITION	UNIT	OPERATION	VALUE
PLL LOCK VOLTAGE (adjustment) [RX LVA1]	1	Set the preset value of [LV (RX1)], [LV (RX2)] to "210 [4.11V]," and [LV (TX)] "57 [1.11V]" on the adjustment software.			
	2	• Channel : CH 1 • Receiving	PC screen	Click [Reload (F5)] button, then check the "LVIN" item on the CS-F5060 ADJ's screen as below.	4.11 V
[RX LVA2]	3	• Channel : CH 2 • Receiving			
[TX LVA]	4	• Channel : CH 3 • Transmitting			1.11 V
		CONVENIENT: The "PLL LOCK VOLTAGE" can be adjusted automatically. 1: Set the Lock voltage preset; [LV RX1], [LV RX2]) to "210 (4.11 V)," [LV TX] to "57 (1.11 V)." 2: Put the cursor on [RX LVA1], [RX LVA2] and [TX LVA], then push the [ENTER] key on the connected PC's keyboard.			
PLL LOCK VOLTAGE (verify)	1	• Channel : CH 3 • Receiving	PC screen	Click [Reload (F5)] button, then check the "LVIN" item on the CS-F5060 ADJ's screen.	0.8–1.6 V (Verify)
	2	• Channel : CH 4 • Receiving			
	3	• Channel : CH 2 • Transmitting			3.5–4.5 V (Verify)
REFERENCE FREQUENCY [REF]	1	• Channel : CH 2 • Connect an RF power meter to the antenna connector. • Transmitting	Top panel	Loosely couple a frequency counter to the antenna connector.	174.000000 MHz

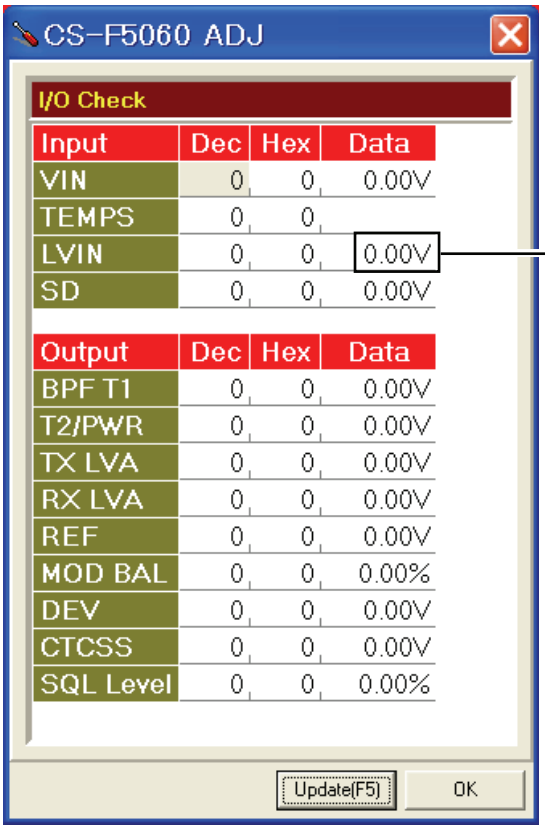

PLL LOCK VOLTAGE will be appeared here

NOTE: The above screen is an example only.
Each item's voltage will appear when pushing [Update] button.

PARTS LIST

[FRONT UNIT]

REF NO.	ORDER NO.	DESCRIPTION		M.	H/V LOCATION
IC501	1130009121	S.IC	S1D15206F00A200	B	33.1/19.5
IC502	1110005771	S.IC	S-80942CNMC-G9CT2G	B	61.4/9.7
IC503	1140010771	S.IC	HD64F3687FPV	B	62.1/25.2
IC504	1130007111	S.IC	TC7W04FU (TE12L,F)	B	73.9/26.3
IC505	1110005310	S.IC	AN6123MS	B	10/8.4
IC506	1110005350	S.IC	NJM2870F05-TE1	B	84.9/9.9
IC507	1130006221	S.IC	TC4W53FU (TE12L,F)	B	6.5/19
IC508	1130008561	S.IC	TC75S51F (TE85L,F)	B	74/11.3
Q501	1590001050	S.TR	DTC114TUA T106	B	15.1/32.9
Q502	1590001050	S.TR	DTC114TUA T106	B	18/32.9
Q503	1590001330	S.TR	DTA114EUA T106	B	77/24.7
Q504	1530002851	S.TR	2SC4116-BL (TE85R,F)	B	91.5/22.4
Q505	1590001050	S.TR	DTC114TUA T106	B	92.5/18.8
Q506	1590000680	S.TR	DTC114EUA T106	B	77/27.4
Q507	1590001050	S.TR	DTC114TUA T106	B	51.4/30.2
D501	1750000370	S.DIO	DA221 TL	T	3.5/27.1
D502	1750000370	S.DIO	DA221 TL	T	3.5/25
D503	1750000370	S.DIO	DA221 TL	T	3.5/22.9
D504	1790001260	S.DIO	MA2S077-(TX)	B	50.9/23.1
D505	1790001250	S.DIO	MA2S111-(TX)	B	3.3/23.3
D506	1790001250	S.DIO	MA2S111-(TX)	B	82.1/21.7
D507	1790001250	S.DIO	MA2S111-(TX)	B	79.7/25.8
D508	1790000950	S.ZEN	MA8056-M (TX)	T	4.8/19.7
D509	1790000950	S.ZEN	MA8056-M (TX)	T	8.6/19.7
D510	1790000950	S.ZEN	MA8056-M (TX)	T	10.4/19.7
X501	6050011720	S.XTL	CR-764 (19.6608 MHz)	B	49.6/18.9
L501	6200003640	S.COL	MLF1608E 100K-T	B	12/19.1
R501	7030003810	S.RES	ERJ3GEYJ 125 V (1.2 M)	B	46/28.8
R502	7030003810	S.RES	ERJ3GEYJ 125 V (1.2 M)	B	46.6/23.8
R503	7310005130	S.TRI	RH03ADCS5X (470 k)	B	45.5/26.3
R504	7030005120	S.RES	ERJ2GEJ 102 X (1 k)	B	8/29.3
R505	7030005120	S.RES	ERJ2GEJ 102 X (1 k)	B	10/29.3
R506	7030005120	S.RES	ERJ2GEJ 102 X (1 k)	B	12/29.3
R507	7030005010	S.RES	ERJ2GEJ 681 X (680)	T	14.3/37.2
R508	7030005120	S.RES	ERJ2GEJ 102 X (1 k)	T	14.3/36.3
R509	7510001730	S.TMR	ERTJOEP 473J	B	59.9/17.1
R510	7030005120	S.RES	ERJ2GEJ 102 X (1 k)	B	61.1/17.1
R511	7030005530	S.RES	ERJ2GEJ 100 X (10)	B	57.1/19.4
R512	7030008010	S.RES	ERJ2GEJ 123 X (12 k)	B	52/22.7
R513	7030005050	S.RES	ERJ2GEJ 103 X (10 k)	B	63.8/10.2
R514	7030005160	S.RES	ERJ2GEJ 105 X (1 M)	B	56.1/20.7
R515	7030008010	S.RES	ERJ2GEJ 123 X (12 k)	B	52.3/23.9
R516	7030008010	S.RES	ERJ2GEJ 123 X (12 k)	B	49.5/23.9
R517	7410001140	S.ARY	EXB28V104JX	B	66.5/10.8
R518	7410001140	S.ARY	EXB28V104JX	B	67.5/19.2
R519	7030005090	S.RES	ERJ2GEJ 104 X (100 k)	B	51.5/26.9
R520	7030005090	S.RES	ERJ2GEJ 104 X (100 k)	B	71.6/26.8
R522	7030005090	S.RES	ERJ2GEJ 104 X (100 k)	T	3.3/17.2
R523	7030004980	S.RES	ERJ2GEJ 101 X (100)	B	13.2/10.9
R524	7030005090	S.RES	ERJ2GEJ 104 X (100 k)	B	71.6/28.4
R525	7030005240	S.RES	ERJ2GEJ 473 X (47 k)	B	80.2/27
R526	7030007300	S.RES	ERJ2GEJ 332 X (3.3 k)	B	79/24.4
R528	7030005090	S.RES	ERJ2GEJ 104 X (100 k)	B	71.7/24.1
R529	7030005090	S.RES	ERJ2GEJ 104 X (100 k)	B	82.1/19.6
R530	7030005160	S.RES	ERJ2GEJ 105 X (1 M)	B	5.4/10
R531	7030009280	S.RES	ERJ2GEJ 391 X	B	92/20.6
R532	7030005120	S.RES	ERJ2GEJ 102 X (1 k)	B	91.4/24.2
R533	7030007290	S.RES	ERJ2GEJ 222 X (2.2 k)	B	91.4/25.2
R534	7030009140	S.RES	ERJ2GEJ 272 X (2.7 k)	B	90.6/20.2
R535	7030005090	S.RES	ERJ2GEJ 104 X (100 k)	B	82.4/31.4
R536	7030005220	S.RES	ERJ2GEJ 223 X (22 k)	B	77.8/22.9
R537	7030005090	S.RES	ERJ2GEJ 104 X (100 k)	T	7.2/19.2
R538	7030005090	S.RES	ERJ2GEJ 104 X (100 k)	T	6.2/19.2
R539	7030010040	S.RES	ERJ2GEJ-JPW	B	76/15.9
R540	7030009290	S.RES	ERJ2GEJ 562 X (5.6 k)	B	4.3/10.9
R541	7030007290	S.RES	ERJ2GEJ 222 X (2.2 k)	B	3.3/16.6
R542	7030009160	S.RES	ERJ2GEJ 181 X (180)	B	89.8/24.2
R543	7030009160	S.RES	ERJ2GEJ 181 X (180)	B	89.8/25.2
R545	7030005240	S.RES	ERJ2GEJ 473 X (47 k)	T	11.8/19.2
R546	7210003050	VAR	EVU-F2KFK3 B14 (10KB)		
R547	7030005120	S.RES	ERJ2GEJ 102 X (1 k)	T	11.8/17.2
R548	7030005120	S.RES	ERJ2GEJ 102 X (1 k)	T	6.8/17.2
R549	7030005120	S.RES	ERJ2GEJ 102 X (1 k)	T	9.3/17.2
R550	7030005240	S.RES	ERJ2GEJ 473 X (47 k)	B	10.9/19.4
R551	7030007300	S.RES	ERJ2GEJ 332 X (3.3 k)	B	11/5.8
R552	7030009280	S.RES	ERJ2GEJ 391 X	B	10.1/5.8
R553	7030007290	S.RES	ERJ2GEJ 222 X (2.2 k)	B	75.2/8.7
R554	7030007290	S.RES	ERJ2GEJ 222 X (2.2 k)	B	71.4/12.4
R555	7030005220	S.RES	ERJ2GEJ 223 X (22 k)	B	71.4/11.5
R556	7030005050	S.RES	ERJ2GEJ 103 X (10 k)	B	73.2/8.7
R557	7030005050	S.RES	ERJ2GEJ 103 X (10 k)	B	71.8/10.2
R558	7030005060	S.RES	ERJ2GEJ 333 X (33 k)	B	74/13.5
R559	7030005090	S.RES	ERJ2GEJ 104 X (100 k)	B	11/20.8
R560	7030005090	S.RES	ERJ2GEJ 104 X (100 k)	T	6.2/20.8
C501	4030016930	S.CER	ECJ0EB1A104K	B	41.8/30.2
C502	4030016930	S.CER	ECJ0EB1A104K	B	40.9/30.2

[FRONT UNIT]

REF NO.	ORDER NO.	DESCRIPTION		M.	H/V LOCATION
C503	4030016930	S.CER	ECJ0EB1A104K	B	42.7/30.2
C504	4030016930	S.CER	ECJ0EB1A104K	B	43.6/30.2
C505	4030016930	S.CER	ECJ0EB1A104K	B	44.5/30.2
C506	4030017490	S.CER	C1608 JB 1A 105K-T	B	44.7/23.2
C507	4030017460	S.CER	ECJ0EB1E102K	B	46.1/22.7
C508	4030017490	S.CER	C1608 JB 1A 105K-T	B	43.4/23.2
C509	4030017730	S.CER	ECJ0EB1E471K	B	13.1/33.3
C510	4030017730	S.CER	ECJ0EB1E471K	B	18.6/30.5
C511	4030016790	S.CER	ECJ0EB1C103K	B	58.3/17.1
C512	4030016930	S.CER	ECJ0EB1A104K	B	62/17.1
C513	4030017030	S.CER	ECJ0EB1A273K	B	59.1/10.2
C514	4030016930	S.CER	ECJ0EB1A104K	B	58.3/18.3
C515	4030017630	S.CER	ECJ0EC1H120J	B	57.1/17.8
C516	4030017580	S.CER	ECJ0EC1H060C	B	48.9/22.7
C517	4030016790	S.CER	ECJ0EB1C103K	B	52.9/22.7
C518	4030017640	S.CER	ECJ0EC1H150J	B	49.8/22.7
C519	4030016930	S.CER	ECJ0EB1A104K	B	53.8/22.7
C520	4030017420	S.CER	ECJ0EC1H470J	T	12.5/36.3
C521	4030017460	S.CER	ECJ0EB1E102K	B	78.8/27.5
C522	4550006480	S.TAN	TEESVA 1C 475M8R	B	87.7/9.8
C523	4550006250	S.TAN	TEESVA 1A 106M8R	B	12.8/7.6
C524	4550006250	S.TAN	TEESVA 1A 106M8R	B	7.2/7.6
C525	4030017330	S.CER	ECJ0EF1C104Z	B	85.7/7.7
C526	4030016790	S.CER	ECJ0EB1C103K	B	84.1/7.7
C527	4030017420	S.CER	ECJ0EC1H470J	T	5.9/17.2
C528	4030017460	S.CER	ECJ0EB1E102K	T	8.4/17.2
C529	4550006250	S.TAN	TEESVA 1A 106M8R	B	82.1/9.8
C530	4030016930	S.CER	ECJ0EB1A104K	B	84.1/12.1
C531	4030017460	S.CER	ECJ0EB1E102K	B	79/22.5
C533	4030017460	S.CER	ECJ0EB1E102K	B	80/22.5
C534	4030017420	S.CER	ECJ0EC1H470J	B	76.2/22.9
C535	4030016930	S.CER	ECJ0EB1A104K	B	5.4/9.1
C536	4030016930	S.CER	ECJ0EB1A104K	B	3.3/18.2
C537	4030017460	S.CER	ECJ0EB1E102K	B	14/25
C538	4030017330	S.CER	ECJ0EF1C104Z	B	6/10.9
C539	4030017420	S.CER	ECJ0EC1H470J	T	10.9/17.2
C540	4030017460	S.CER	ECJ0EB1E102K	B	10.9/17.8
C541	4030017420	S.CER	ECJ0EC1H470J	B	8.5/10.9
C543	4030017420	S.CER	ECJ0EC1H470J	B	77.6/16.7
C544	4030017420	S.CER	ECJ0EC1H470J	B	79.8/16.7
C545	4030017420	S.CER	ECJ0EC1H470J	B	77.6/15.8
C546	4030017420	S.CER	ECJ0EC1H470J	B	74/15.3
C547	4030017460	S.CER	ECJ0EB1E102K	B	74/16.2
C548	4030017490	S.CER	C1608 JB 1A 105K-T	B	9.7/19.3
C549	4030016930	S.CER	ECJ0EB1A104K	B	3.7/21.2
C550	4030018900	S.CER	ECJ0EB0J474K	B	70.1/11.9
C551	4030016930	S.CER	ECJ0EB1A104K	B	70.9/10.2
C552	4030017460	S.CER	ECJ0EB1E102K	B	75.2/6.9
C553	4030017460	S.CER	ECJ0EB1E102K	B	71.4/13.3
C554	4030016790	S.CER	ECJ0EB1C103K	B	74.2/8.7
C555	4030017460	S.CER	ECJ0EB1E102K	B	74/14.4
C556	4550006480	S.TAN	TEESVA 1C 475M8R	B	76.9/10.2
J501	6510022021	S.CNR	14FLT-SM2-TB (LF) (SN)	B	88/28.5
J502	6510023091	S.CNR	20FLT-SM2-TB (LF) (SN)	B	75.5/19.5
J503	6450002210	CNR	3017-8821 <KIN>		
DS501	5030003020	LCD	L6-0226TVM-3		
DS502	5040002670	S.LED	CL-165HR/YG	T	18.2/35.9
DS503	5040002310	S.LED	SML-311YTT86	T	32.8/6.5
DS504	5040002310	S.LED	SML-311YTT86	T	46.1/6.3
DS505	5040002310	S.LED	SML-311YTT86	T	59.8/6.3
DS506	5040002310	S.LED	SML-311YTT86	T	92.3/24.5
DS507	5040002310	S.LED	SML-311YTT86	T	73.1/6.5
DS508	5040002310	S.LED	SML-311YTT86	T	31.7/26
DS509	5040002310	S.LED	SML-311YTT86	T	40.2/26
DS510	5040002310	S.LED	SML-311YTT86	T	48.7/26
DS511	5040002310	S.LED	SML-311YTT86	T	74.2/26
DS512	5040002310	S.LED	SML-311YTT86	T	65.7/26
DS513	5040002310	S.LED	SML-311YTT86	T	57.2/26
SP501	2510001400	SP	3050S-E6227		
W501	8900012711	CBL	OPC-1297A (P0.5,N20,L62)		
W502	7120000470	JMP	ERDS2T0		
W503	7120000470	JMP	ERDS2T0		
EP502	8930072220	LCT	SRCN-2979-SP-N-W		

M.=Mounted side (T: Mounted on the Top side, B: Mounted on the Bottom side)
S.=Surface mount

[MAIN UNIT]

REF NO.	ORDER NO.	DESCRIPTION	M.	H/V LOCATION
IC1	1110005340	S.IC NJM12902V-TE1	T	82.3/12.9
IC2	1110006221	S.IC AK2346P-E2/P	B	44.7/11.7
IC3	1140013200	S.IC CD4053BPWR	B	58.7/9.3
IC4	1130010100	S.IC LMX2352TMX/NOPB	T	82.9/46
IC5	1110003491	S.IC TA31136FNG (D,EL)	T	28/13.9
IC6	1190001350	S.IC M62364FP 600D	B	84.9/12.9
IC7	1110005340	S.IC NJM12902V-TE1	T	108.5/43.7
IC8	1140013200	S.IC CD4053BPWR	B	58.7/16.1
IC9	1130012960	S.IC BU8872FS-E2	B	133.1/21.3
IC10	1190002051	S.IC SPM5001-TL-E	B	33.8/36.9
IC12	1190001340	S.IC M62334FP 600C	B	9.1/25.7
IC13	1110005771	S.IC S-80942CNMC-G9CT2G	B	126/44.8
IC14	1140013520	S.IC HD64F2506FC26DV	B	111.8/35.7
IC15	1150002042	IC RA30H1317M-121 [EXP-01], [EUR-01]		
	1150002073	IC RA60H1317M-125 [USA-01]		
IC16	1140012950	S.IC 24LC512T-I/SM	B	133.3/29
IC17	1110002751	S.IC TA75S01F (TE85R,F)	T	54.1/70.4
IC18	1180000970	S.IC AN78L05M-(E1)	B	113/65.3
IC19	1120002510	S.IC DS14C232TM	T	104.7/70.5
IC20	1180001251	S.IC TA7808F (TE16L,Q)	B	121.5/65.8
IC21	1110003091	IC LA4425A-E		
IC22	1110002751	S.IC TA75S01F (TE85R,F)	B	135.5/54.4
IC23	1130006221	S.IC TC4W53FU (TE12L,F)	B	106.9/9.6
IC24	1110002751	S.IC TA75S01F (TE85R,F)		
Q1	1590003230	S.TR UNR9113J-(TX)	B	15.2/6
Q3	1530002851	S.TR 2SC4116-BL (TE85R,F)	B	36.4/15.5
Q4	1590001650	S.TR XP4601 (TX)	B	92.8/12.4
Q5	1590003290	S.TR UNR9213J-(TX)	B	76.7/50
Q6	1530002851	S.TR 2SC4116-BL (TE85R,F)	T	63.2/55.1
Q7	1560000541	S.FET 2SK880-Y (T5RICOM,F)	B	81.2/27.1
Q8	1530002851	S.TR 2SC4116-BL (TE85R,F)	B	79.2/31.8
Q9	1530002851	S.TR 2SC4116-BL (TE85R,F)	B	81.7/31.8
Q10	1560001360	S.FET 2SK3019 TL	B	57/31.6
Q12	1530002601	S.TR 2SC4215-O (TE85R,F)	T	26.9/20
Q13	1530002851	S.TR 2SC4116-BL (TE85R,F)	B	31.8/9.9
Q16	1590003290	S.TR UNR9213J-(TX)	T	113.2/47.6
Q17	1530002920	S.TR 2SC4226-T1 R25	T	50.9/47.6
Q18	1530002920	S.TR 2SC4226-T1 R25	T	61.6/42.6
Q19	1530002920	S.TR 2SC4226-T1 R25	T	72.1/43
Q20	1590003230	S.TR UNR9113J-(TX)	B	33.9/25.2
Q22	1530003311	S.TR 2SC5107-O (TE85R,F)	T	58.1/46.3
Q23	1590001400	S.TR XP1214 (TX)	B	55.7/40.9
Q24	1590003290	S.TR UNR9213J-(TX)	B	55.8/38.2
Q25	1530003311	S.TR 2SC5107-O (TE85R,F)	B	65.9/49.5
Q26	1590001400	S.TR XP1214 (TX)	B	67.2/43.1
Q27	1590003230	S.TR UNR9113J-(TX)	T	124.7/52
Q28	1590003290	S.TR UNR9213J-(TX)	B	123.4/46.3
Q29	1530003311	S.TR 2SC5107-O (TE85R,F)	B	53.5/51.2
Q30	1530000372	S.TR 2SC3356-T1B R (R24)	B	65.5/66
Q31	1580000731	S.FET 3SK293 (TE85L,F)	B	10.2/38.6
Q32	1560000841	S.FET 2SK1829 (TE85R,F)	T	11/42.5
Q33	1530002851	S.TR 2SC4116-BL (TE85R,F) [USA-01] only	T	47.5/69.4
Q34	1590003290	S.TR UNR9213J-(TX)	T	83/67.4
Q35	1520000460	S.TR 2SB1132 T100 R	T	100.1/57.9
Q36	1590001190	S.TR XP6501-(TX) .AB	T	104.3/55.8
Q37	1540000550	S.TR 2SD1664 T100Q	T	75.5/63.6
Q38	1510000920	S.TR 2SA1577 T106 Q	T	39.3/21.3
Q39	1590003290	S.TR UNR9213J-(TX)	T	42.6/21.3
Q40	1590003290	S.TR UNR9213J-(TX)	T	104.1/51.9
Q41	1590001451	S.FET 2SJ144-GR (TE85R,F)	B	110.3/83.3
Q42	1590003290	S.TR UNR9213J-(TX)	B	132.1/45
Q43	1590000990	S.TR DTC363EK T146	B	135.7/49
Q44	1590003290	S.TR UNR9213J-(TX)	T	108.5/21.6
Q45	1590003290	S.TR UNR9213J-(TX)	B	133.3/58.9
Q46	1590003290	S.TR UNR9213J-(TX)	T	117.9/84.4
Q47	1550000100	S.FET 2SJ377 (TE16L1,NQ)	B	131.3/71.5
Q48	1590003290	S.TR UNR9213J-(TX)	B	124.9/77.7
Q49	1530002851	S.TR 2SC4116-BL (TE85R,F)	B	139.3/37.2
Q50	1530002601	S.TR 2SC4215-O (TE85R,F)	T	40.6/39.2
Q51	1590003321	S.FET TPC6103 (TE85L,F)	B	133.6/63.4
Q52	1590003290	S.TR UNR9213J-(TX)	B	128.2/61.1
Q53	1590000430	S.TR DTC144EUA T106	B	52.3/67.4
Q54	1590000430	S.TR DTC144EUA T106	T	25.5/6.3
Q55	1560001360	S.FET 2SK3019 TL	T	75.5/20.9
Q57	1590003290	S.TR UNR9213J-(TX)	T	112/14.4
D1	1750001070	S.DIO DAN235ETL	T	10.4/15.7
D2	1750001070	S.DIO DAN235ETL	T	22.6/8.9
D3	1790001250	S.DIO MA2S111-(TX)	T	61.3/55
D4	1790001260	S.DIO MA2S077-(TX)	B	72.9/49.8
D5	1790001260	S.DIO MA2S077-(TX)	B	71.1/51.3
D6	1750001070	S.DIO DAN235ETL	T	30.6/20.8
D7	1160000140	S.DIO DAP222 TL	T	58.9/14
D8	1720000791	S.VCP HVC321B1TRF-E	T	49.5/32.4
D9	1720000791	S.VCP HVC321B1TRF-E	T	52.7/32.4
D10	1720000791	S.VCP HVC321B1TRF-E	T	60.5/30
D11	1720000641	S.VCP 1SV284 (TPH3,F)	T	52.7/33.6
D12	1720000641	S.VCP 1SV284 (TPH3,F)	T	52.7/34.8
D13	1720000791	S.VCP HVC321B1TRF-E	T	63.8/28.6
D14	1720000791	S.VCP HVC321B1TRF-E	T	73.6/30.4
D15	1720000641	S.VCP 1SV284 (TPH3,F)	T	63.8/31.3
D16	1720000641	S.VCP 1SV284 (TPH3,F)	T	63.8/30
D17	1720000791	S.VCP HVC321B1TRF-E	T	72.1/27.9
D18	1750000721	S.VCP HVC375BTRF-E	T	69.8/33.3
D19	1160000140	S.DIO DAP222 TL	B	120.5/17.8
D20	1720000471	S.VCP 1SV239 (TPH3,F)	T	69.4/34.9
D21	1750001070	S.DIO DAN235ETL	T	36.3/38.3
D22	1750000520	S.DIO DAN222TL	T	124.7/54.5
D23	1790001260	S.DIO MA2S077-(TX)	T	125.6/39.2

[MAIN UNIT]

REF NO.	ORDER NO.	DESCRIPTION	M.	H/V LOCATION
D24	1790001260	S.DIO MA2S077-(TX)	B	50.7/53.2
D25	1790001260	S.DIO MA2S077-(TX)	B	49.3/50.8
D26	1750000711	S.VCP HVC350BTRF-E	B	17.7/36
D27	1750000711	S.VCP HVC350BTRF-E	B	16.2/36
D28	1750000370	S.DIO DA221 TL	T	10/37.5
D29	1790001250	S.DIO MA2S111-(TX)	T	12/39.5
D30	1750000721	S.VCP HVC375BTRF-E	B	8.6/44.7
D31	1790001250	S.DIO MA2S111-(TX)	T	8.5/43.7
D32	1750001080	S.DIO RB886G T2R	T	64.1/76.5
D33	1750001080	S.DIO RB886G T2R	T	65.8/75.8
D34	1750000721	S.VCP HVC375BTRF-E	B	8.6/47.4
D35	1790001260	S.DIO MA2S077-(TX)	B	17.9/48.1
D36	1790001240	S.DIO MA2S728-(TX)	B	16.5/48.1
D37	1750000370	S.DIO DA221 TL	T	75.5/67.6
D38	1750000511	S.DIO UX9401F-STD/TR [EXP-01], [EUR-01]	T	30/66
D39	1710001061	DIO L407CDB [USA-01] only		
D42	1750001360	S.DIO L709CER (9401)	T	34.6/58.7
D45	1750000520	S.DIO DAN222TL	T	91.8/57.5
D46	1750000520	S.DIO DAN222TL	T	89.6/57.5
D47	1790001211	S.DIO 1SS375-TL-E	B	29.2/63.8
D48	1750000520	S.DIO DAN222TL	B	93/61.5
D49	1790001211	S.DIO 1SS375-TL-E	B	6/52.8
D50	1750000370	S.DIO DA221 TL	B	97.2/65.8
D51	1790001211	S.DIO 1SS375-TL-E	B	3.9/79.7
D52	1750000520	S.DIO DAN222TL	B	132.5/41
D53	1790001250	S.DIO MA2S111-(TX)	B	133.3/47.3
D55	1750000370	S.DIO DA221 TL	B	108.8/57.4
D56	1750000370	S.DIO DA221 TL	T	108.8/60.6
D57	1750000370	S.DIO DA221 TL	B	95.1/65.8
D58	1750000520	S.DIO DAN222TL	T	94/57.5
D59	1750000520	S.DIO DAN222TL	B	104/80.4
D62	1790000700	DIO DSA3A1		
D63	1750000520	S.DIO DAN222TL	B	110.3/80.9
D64	1790001250	S.DIO MA2S111-(TX)		
D65	1750000520	S.DIO DAN222TL	B	129.7/58.9
D66	1790001621	S.DIO 1SV308 (TPL3,F)	T	33.9/38.8
D67	1790001621	S.DIO 1SV308 (TPL3,F)	T	33.9/37.5
D68	1790001621	S.DIO 1SV308 (TPL3,F)	T	29.9/23.2
D69	1790001621	S.DIO 1SV308 (TPL3,F)	T	31.2/23.2
D70	1750000351	S.DIO 1SV252 (TE85L,F)	T	73.6/75.5
D71	1730002410	S.ZEN MA8200-H (TX)	T	118.3/86.3
D72	1750000520	S.DIO DAN222TL	T	87.4/57.5
D73	1750000520	S.DIO DAN222TL	B	93/64.5
FI1	2020001410	CER CFWLB450KGFA-B0		
FI2	2020002180	S.CER CFWKA450KHFA-R0	T	15.4/9.3
FI3	2030000500	S.MLH FL-401 (46.35 MHz)	T	24.7/28.4
FI4	2030000150	S.MLH FL-335 (46.350 MHz)	T	35.6/28.4
FI5	2040001440	S.LC NFE31PT152Z1E9L	B	94.5/77
FI6	2040001440	S.LC NFE31PT152Z1E9L	B	94.5/73.7
FI7	2040001440	S.LC NFE31PT152Z1E9L [USA-01] only	B	94.5/70.3
X1	6050012380	S.XTL CR-826 (15.3 MHz)	T	84.2/34.7
X2	6050011730	S.XTL CR-765 (3.6864 MHz)	T	48.3/11.6
X3	6070000300	S.DCR JTBM450CX24 <JJE>	T	37.1/10.3
X4	6050012320	S.XTL CR-818 (4.194304 MHz)	T	139.1/21.9
X5	6050011720	S.XTL CR-764 (19.6608 MHz)	T	120.5/44.3
L1	6200004660	S.COL MLF1608A 1R8K-T	T	82.7/54.3
L2	6200003540	S.COL MLF1608D R22K-T	B	34.4/14.7
L3	6200004480	S.COL MLF1608D R82K-T	B	29.7/16.2
L4	6200007911	S.COL ELJRF 18NJFB	B	75.9/48.3
L5	6200007170	S.COL MLF1608A 3R3K-T	T	49.4/30.8
L6	6200007170	S.COL MLF1608A 3R3K-T	T	52.7/30.8
L7	6200007170	S.COL MLF1608A 3R3K-T	T	60.5/28.4
L8	6200007170	S.COL MLF1608A 3R3K-T	T	74/27.5
L9	6200007170	S.COL MLF1608A 3R3K-T	T	69.8/32
L10	6200010600	S.COL C6342A-67NG-A	T	51.2/39.2
L11	6200003640	S.COL MLF1608E 100K-T	T	48.3/33.6
L12	6200009910	S.COL C6342A-88NG-A	T	61.6/35.5
L13	6200007170	S.COL MLF1608A 3R3K-T	T	63.8/27
L14	6200003640	S.COL MLF1608E 100K-T	T	60/31.4
L15	6200012450	S.COL 0.25-1.9-8TL 73N	T	73.3/35.9
L16	6200008090	S.COL LQW2BHN68NJ03L	T	69.5/28
L17	6200003640	S.COL MLF1608E 100K-T	T	73.7/32.6
L18	6130003000	S.COL #617DB-1714=P3	B	39/36.2
L19	6130003000	S.COL #617DB-1714=P3	B	34.5/42.6
L20	6200009181	S.COL ELJRE R10JFA	T	57.3/48.3
L21	6200007911	S.COL ELJRF 18NJFB	B	66.3/51.2
L22	6200005721	S.COL ELJRE 33NGFA	B	40.6/48.1
L23	6200005721	S.COL ELJRE 33NGFA	B	45.5/48.1
L24	6130003000	S.COL #617DB-1714=P3	B	27/36.2
L25	6200009151	S.COL ELJRE 82NJFA	B	54.2/53.4
L26	6200007750	S.COL LQW2BHN56NJ03L	B	20.9/37
L27	6200009181	S.COL ELJRE R10JFA	B	66.5/69.4
L28	6200007750	S.COL LQW2BHN56NJ03L	B	11.7/35.1
L29	6200009171	S.COL ELJRE 47NJFA	B	70.5/70.8
L30	6200009171	S.COL ELJRE 47NJFA	T	72.6/72.7
L31	6200008090	S.COL LQW2BHN68NJ03L	B	7.8/41.5
L32	6200008090	S.COL LQW2BHN68NJ03L	B	9.9/50.6
L33	6200010050	S.COL AS080547-47N	T	33.3/73.9
L34	6200007750	S.COL LQW2BHN56NJ03L	B	13.2/51.7
L35	6200006991	S.COL ELJRE 56NGFA	B	20.1/50.7
L36	6200010420	S.COL FHW1210HC 1R0JGT <JJE>	B	39.2/66
L37	6200010050	S.COL AS080547-47N	T	30/58.5
L38	6200010050	S.COL AS080547-47N	T	21.6/58
L39	6200010050	S.COL AS080547-47N	T	12.5/57.5
L40	6200010050	S.COL AS080547-47N	T	10.5/81
L41	6200002861	S.COL NLV25T-4R7J	T	122.3/54.4
L42	6200005011	S.COL NLV25T-100J	T	40.7/42.1
L43	6200010680	S.COL C2520C-R22G-A (0.22U)	T	42.1/34.9

M.=Mounted side (T: Mounted on the Top side, B: Mounted on the Bottom side)
S.=Surface mount

[MAIN UNIT]

REF NO.	ORDER NO.	DESCRIPTION	M.	H/V LOCATION
L44	6200010740	S.COL C2520C-R27G-A	T	37.8/35.3
L45	6200003960	S.COL MLF1608A 1R0K-T	T	71.3/72.7
L46	6200005661	S.COL ELJRE 10NGFA	T	78.3/42.3
R1	7030005060	S.RES ERJ2GEJ 333 X (33 k)	B	38.1/5.8
R2	7510001730	S.TMR ERTJOEP 473J	T	90.4/35.6
R3	7030005050	S.RES ERJ2GEJ 103 X (10 k)	T	79/11.9
R4	7030005700	S.RES ERJ2GEJ 274 X (270 k)	B	88.5/18.9
R5	7030005090	S.RES ERJ2GEJ 104 X (100 k)	T	90.4/34
R6	7030005160	S.RES ERJ2GEJ 105 X (1 M)	T	84/19.4
R7	7030005230	S.RES ERJ2GEJ 334 X (330 k)	T	84/17.5
R8	7410001130	S.ARY EXB28V102JX	T	86.1/52.4
R9	7030007570	S.RES ERJ2GEJ 122 X (1.2 k)	B	34.3/11.6
R10	7030007060	S.RES ERJ2GEJ 684X (680 k)	B	35.8/13.7
R11	7030010040	S.RES ERJ2GEJ-JPW	T	8.5/9.2
R12	7030004970	S.RES ERJ2GEJ 470 X (47)	T	31/17.2
R13	7030005600	S.RES ERJ2GEJ 273 X (27 k)	T	8.8/15.9
R14	7030005210	S.RES ERJ2GEJ 822 X (8.2 k)	T	7.5/7.4
R15	7030005070	S.RES ERJ2GEJ 683 X (68 k)	B	93.3/14.4
R17	7030007570	S.RES ERJ2GEJ 122 X (1.2 k)	B	93.3/15.3
R18	7030008300	S.RES ERJ2GEJ 184 X (180 k)	B	79/11.8
R19	7030005230	S.RES ERJ2GEJ 334 X (330 k)	T	89.3/9
R20	7030005090	S.RES ERJ2GEJ 104 X (100 k)	T	85.6/8.3
R21	7030005070	S.RES ERJ2GEJ 683 X (68 k)	T	86.6/8.3
R22	7030005050	S.RES ERJ2GEJ 103 X (10 k)	B	38.1/7.5
R23	7030005050	S.RES ERJ2GEJ 103 X (10 k)	B	38.1/9.2
R24	7030005060	S.RES ERJ2GEJ 333 X (33 k)	B	37.2/10.5
R25	7030005120	S.RES ERJ2GEJ 102 X (1 k)	B	100.9/51.4
R26	7030005000	S.RES ERJ2GEJ 471 X (470)	B	87.5/5.3
R27	7030004980	S.RES ERJ2GEJ 101 X (100)	T	53.9/5.6
R27	7030007300	S.RES ERJ2GEJ 332 X (3.3 k)	T	53.9/5.6
R28	7030010040	S.RES ERJ2GEJ-JPW	T	59.4/5.6
R29	7030005000	S.RES ERJ2GEJ 471 X (470)	T	116.4/14.5
R30	7030005170	S.RES ERJ2GEJ 474 X (470 k)	B	37.2/9.2
R31	7030007340	S.RES ERJ2GEJ 153 X (15 k)	B	36.3/9.2
R32	7030005720	S.RES ERJ2GEJ 563 X (56 k)	B	37.2/7.5
R33	7030005160	S.RES ERJ2GEJ 105 X (1 M)	T	80.7/8.4
R34	7030005040	S.RES ERJ2GEJ 472 X (4.7 k)	T	80.7/7.2
R35	7030005120	S.RES ERJ2GEJ 102 X (1 k)	T	77.6/9.5
R36	7030005030	S.RES ERJ2GEJ 152 X (1.5 k)	B	27/14.7
R37	7030007300	S.RES ERJ2GEJ 332 X (3.3 k)	B	15.2/8.6
R38	7030005210	S.RES ERJ2GEJ 822 X (8.2 k)	T	22.9/6.2
R39	7030005600	S.RES ERJ2GEJ 273 X (27 k)	T	24/9.1
R40	7030005170	S.RES ERJ2GEJ 474 X (470 k)	T	25.9/10.6
R41	7030007290	S.RES ERJ2GEJ 222 X (2.2 k)	T	27.6/6.2
R42	7030005090	S.RES ERJ2GEJ 104 X (100 k)	B	94.8/11.7
R43	7030007300	S.RES ERJ2GEJ 332 X (3.3 k)	B	94.8/10
R44	7030007340	S.RES ERJ2GEJ 153 X (15 k)	B	90.7/11.9
R45	7030005220	S.RES ERJ2GEJ 223 X (22 k)	B	92.8/10
R46	7030005040	S.RES ERJ2GEJ 472 X (4.7 k)	T	92.1/14.1
R47	7030005050	S.RES ERJ2GEJ 103 X (10 k)	T	92.1/13.1
R48	7030005060	S.RES ERJ2GEJ 333 X (33 k)	B	50.9/8.6
R49	7030005160	S.RES ERJ2GEJ 105 X (1 M)	B	49.7/13.7
R50	7030005090	S.RES ERJ2GEJ 104 X (100 k)	B	49.7/11
R51	7030005050	S.RES ERJ2GEJ 103 X (10 k)	T	52.4/7
R51	7030005210	S.RES ERJ2GEJ 822 X (8.2 k)	T	52.4/7
R52	7030007340	S.RES ERJ2GEJ 153 X (15 k)	T	59.1/12.5
R53	7030005000	S.RES ERJ2GEJ 471 X (470)	T	86.2/37.7
R54	7030010040	S.RES ERJ2GEJ-JPW	B	78.7/36.4
R55	7030005290	S.RES ERJ2GEJ 682 X (6.8 k)	T	81.8/25.3
R56	7030005040	S.RES ERJ2GEJ 472 X (4.7 k)	B	77.7/48.4
R57	7030005090	S.RES ERJ2GEJ 104 X (100 k)	B	28.3/14.3
R58	7030005050	S.RES ERJ2GEJ 103 X (10 k)	T	27.6/9
R59	7030005170	S.RES ERJ2GEJ 474 X (470 k)	T	27.6/8.1
R60	7030005000	S.RES ERJ2GEJ 471 X (470)	T	30.9/10.2
R61	7030005040	S.RES ERJ2GEJ 472 X (4.7 k)	T	28.8/8.5
R62	7030005040	S.RES ERJ2GEJ 472 X (4.7 k)	B	32.2/11.9
R63	7030005220	S.RES ERJ2GEJ 223 X (22 k)	B	92.8/8.3
R64	7030005220	S.RES ERJ2GEJ 223 X (22 k)	B	92.8/6.5
R65	7030005090	S.RES ERJ2GEJ 104 X (100 k)	B	50.9/9.5
R66	7030005050	S.RES ERJ2GEJ 103 X (10 k)	T	86.6/11.8
R67	7030005050	S.RES ERJ2GEJ 103 X (10 k)	T	53.4/7
R67	7030005210	S.RES ERJ2GEJ 822 X (8.2 k)	T	53.4/7
R68	7030007290	S.RES ERJ2GEJ 222 X (2.2 k)	B	53.7/17.9
R68	7030010040	S.RES ERJ2GEJ-JPW	B	53.7/17.9
R69	7030010040	S.RES ERJ2GEJ-JPW	T	85.6/13.6
R71	7030005090	S.RES ERJ2GEJ 104 X (100 k)	T	57.7/6.3
R72	7030007290	S.RES ERJ2GEJ 222 X (2.2 k)	T	64.9/55.6
R73	7030005000	S.RES ERJ2GEJ 471 X (470)	B	83.2/26.9
R73	7030005120	S.RES ERJ2GEJ 102 X (1 k)	B	83.2/26.9
R74	7030007300	S.RES ERJ2GEJ 332 X (3.3 k)	B	81.8/25.3
R75	7030009140	S.RES ERJ2GEJ 272 X (2.7 k)	B	79.2/34
R76	7030007340	S.RES ERJ2GEJ 153 X (15 k)	B	80.3/29.1
R77	7030005580	S.RES ERJ2GEJ 560 X (56)	T	78.2/47.2
R78	7030005070	S.RES ERJ2GEJ 683 X (68 k)	B	81.5/34
R79	7030005040	S.RES ERJ2GEJ 472 X (4.7 k)	B	74.8/50
R80	7030005040	S.RES ERJ2GEJ 472 X (4.7 k)	B	70/50.9
R81	7030005110	S.RES ERJ2GEJ 224 X (220 k)	B	55.5/31.4
R82	7030005110	S.RES ERJ2GEJ 224 X (220 k)	B	66.3/33.3
R83	7030008400	S.RES ERJ2GEJ 182 X (1.8 k)	T	32.6/10.2
R84	7030007280	S.RES ERJ2GEJ 331 X (330)	T	24.6/20.3
R85	7030005110	S.RES ERJ2GEJ 224 X (220 k)	T	24.6/21.2
R86	7030007300	S.RES ERJ2GEJ 332 X (3.3 k)	B	30/10.5
R87	7030007300	S.RES ERJ2GEJ 332 X (3.3 k)	T	32.2/20.6
R88	7030005120	S.RES ERJ2GEJ 102 X (1 k)	B	91.7/6.5
R90	7030005000	S.RES ERJ2GEJ 471 X (470)	B	89.4/18.9
R91	7030005700	S.RES ERJ2GEJ 274 X (270 k)	T	85.6/11.8
R92	7030005090	S.RES ERJ2GEJ 104 X (100 k)	T	87.3/13.4
R93	7030005310	S.RES ERJ2GEJ 124 X (120 k)	T	83.9/8.2
R94	7030005080	S.RES ERJ2GEJ 823 X (82 k)	T	108/34.7
R95	7030005720	S.RES ERJ2GEJ 563 X (56 k)	T	108/33.8
R96	7030005240	S.RES ERJ2GEJ 473 X (47 k)	B	63.7/15.5
R97	7030005060	S.RES ERJ2GEJ 333 X (33 k)	B	53.3/16.6

[MAIN UNIT]

REF NO.	ORDER NO.	DESCRIPTION	M.	H/V LOCATION
R98	7030005040	S.RES ERJ2GEJ 472 X (4.7 k)	B	62.1/19.4
R99	7030005240	S.RES ERJ2GEJ 473 X (47 k)	B	60.2/19.4
R100	7030005030	S.RES ERJ2GEJ 152 X (1.5 k)	B	77.9/34.4
R101	7030008280	S.RES ERJ2GEJ 271 X (270)	B	79.2/29.1
R102	7030005530	S.RES ERJ2GEJ 100 X (10)	T	23/20.3
R103	7030005600	S.RES ERJ2GEJ 273 X (27 k)	B	29.9/23.8
R104	7030007280	S.RES ERJ2GEJ 331 X (330)	T	26.9/22.6
R105	7030005600	S.RES ERJ2GEJ 273 X (27 k)	B	30.9/23.8
R106	7030007270	S.RES ERJ2GEJ 151 X (150)	T	34.3/22.5
R107	7030007340	S.RES ERJ2GEJ 153 X (15 k)	B	129.7/52.3
R108	7030005240	S.RES ERJ2GEJ 473 X (47 k)	B	82.3/18.9
R109	7030005700	S.RES ERJ2GEJ 274 X (270 k)	B	81.3/18.9
R110	7030005050	S.RES ERJ2GEJ 103 X (10 k)	T	78.4/20.2
R111	7030005050	S.RES ERJ2GEJ 103 X (10 k)	T	95.9/28.3
R112	7030005700	S.RES ERJ2GEJ 274 X (270 k)	T	80.8/20.1
R113	7030005240	S.RES ERJ2GEJ 473 X (47 k)	B	57.9/19.4
R114	7030005090	S.RES ERJ2GEJ 104 X (100 k)	B	53.7/13.3
R115	7030005090	S.RES ERJ2GEJ 104 X (100 k)	T	114.4/18.4
R116	7030005090	S.RES ERJ2GEJ 104 X (100 k)	B	85.3/7.3
R118	7030006610	S.RES ERJ2GEJ 394 X (390 k)	T	89.5/11.7
R120	7030009280	S.RES ERJ2GEJ 391 X	T	30.3/34.3
R122	7030005600	S.RES ERJ2GEJ 273 X (27 k)	T	32.3/35.2
R123	7030005600	S.RES ERJ2GEJ 273 X (27 k)	T	33.5/35.2
R125	7030004970	S.RES ERJ2GEJ 470 X (47)	T	35/34
R127	7030005050	S.RES ERJ2GEJ 103 X (10 k)	B	79.1/18.3
R128	7030008290	S.RES ERJ2GEJ 183 X (18 k)	T	112.1/45.1
R129	7030005040	S.RES ERJ2GEJ 472 X (4.7 k)	T	112.1/44.1
R130	7030005070	S.RES ERJ2GEJ 683 X (68 k)	T	104.9/43.2
R131	7030005070	S.RES ERJ2GEJ 683 X (68 k)	T	104.9/44.1
R132	7030004980	S.RES ERJ2GEJ 101 X (100)	T	114.4/17.5
R134	7030005160	S.RES ERJ2GEJ 105 X (1 M)	T	128.9/26.3
R135	7030005160	S.RES ERJ2GEJ 105 X (1 M)	T	128.9/25.3
R136	7030005160	S.RES ERJ2GEJ 105 X (1 M)	T	128.9/24.2
R139	7410001140	S.ARY EXB28V104JX	T	130.6/20.6
R140	7030011000	S.RES RR0510P-392-D (3.9 k)	T	48.1/47.2
R141	7030008340	S.RES RR0510P-182-D (1.8 k)	T	50.8/45.4
R142	7030010040	S.RES ERJ2GEJ-JPW	T	49/47.2
R143	7030011000	S.RES RR0510P-392-D (3.9 k)	T	58.7/42.2
R144	7030008340	S.RES RR0510P-182-D (1.8 k)	T	61.7/40.4
R145	7030010040	S.RES ERJ2GEJ-JPW	T	59.6/42.2
R146	7030011000	S.RES RR0510P-392-D (3.9 k)	T	71.8/45.8
R147	7030008340	S.RES RR0510P-182-D (1.8 k)	T	70/41.9
R148	7030010040	S.RES ERJ2GEJ-JPW	T	71.8/44.9
R149	7030005310	S.RES ERJ2GEJ 124 X (120 k)	T	69.1/36.3
R150	7030005240	S.RES ERJ2GEJ 473 X (47 k)	T	89.8/15.5
R151	7030005060	S.RES ERJ2GEJ 333 X (33 k)	T	91/16.1
R152	7030005090	S.RES ERJ2GEJ 104 X (100 k)	T	88.9/16.4
R153	7030007300	S.RES ERJ2GEJ 332 X (3.3 k)	T	39.9/32.2
R154	7030004970	S.RES ERJ2GEJ 470 X (47)	T	42.9/40.1
R155	7030005120	S.RES ERJ2GEJ 102 X (1 k)	T	41.7/32.4
R156	7030004970	S.RES ERJ2GEJ 470 X (47)	T	42.5/41.3
R157	7030005090	S.RES ERJ2GEJ 104 X (100 k)	B	33.7/23.6
R158	7030005240	S.RES ERJ2GEJ 473 X (47 k)	T	112.1/42.3
R159	7030005240	S.RES ERJ2GEJ 473 X (47 k)	T	112.1/40.5
R160	7030005240	S.RES ERJ2GEJ 473 X (47 k)	T	113.8/38.7
R161	7030005070	S.RES ERJ2GEJ 683 X (68 k)	T	104.9/46.8
R162	7030005240	S.RES ERJ2GEJ 473 X (47 k)	T	128.2/14.4
R163	7030005240	S.RES ERJ2GEJ 473 X (47 k)	T	128.7/16.3
R164	7030005240	S.RES ERJ2GEJ 473 X (47 k)	T	129.4/14.4
R165	7030005230	S.RES ERJ2GEJ 334 X (330 k)	T	128.7/17.8
R166	7030005230	S.RES ERJ2GEJ 334 X (330 k)	T	128.7/18.7
R167	7030005230	S.RES ERJ2GEJ 334 X (330 k)	T	129.8/16.2
R168	7030006581	S.RES ERA3YED 122V (1.2 k)	T	53.6/47.5
R169	7030007230	S.RES ERA3YED 102V (1 k)	T	63.8/42.6
R170	7030010390	S.RES ERA3YED 821V (820)	T	74.1/43.2
R171	7030005090	S.RES ERJ2GEJ 104 X (100 k)	T	56.3/46.7
R172	7030008280	S.RES ERJ2GEJ 271 X (270)	B	36.4/46.4
R173	7030007270	S.RES ERJ2GEJ 151 X (150)	B	39/31.2
R174	7030004980	S.RES ERJ2GEJ 101 X (100)	B	34.6/38.7
R175	7030004980	S.RES ERJ2GEJ 101 X (100)	B	33/38.7
R176	7030005590	S.RES ERJ2GEJ 680 X (68)	B	31.3/37.4
R177	7030005590	S.RES ERJ2GEJ 680 X (68)	B	31.3/34.9
R178	7030005240	S.RES ERJ2GEJ 473 X (47 k)	T	113.8/37.8
R179	7030008300	S.RES ERJ2GEJ 184 X (180 k)	T	117.6/34.6
R180	7030005720	S.RES ERJ2GEJ 563 X (56 k)	T	118.3/35.3
R181	7030005220	S.RES ERJ2GEJ 223 X (22 k)	T	119/36
R182	7030005120	S.RES ERJ2GEJ 102 X (1 k)	T	116.9/33.9
R183	7030005070	S.RES ERJ2GEJ 683 X (68 k)	T	103.1/46.8
R184	7030005220	S.RES ERJ2GEJ 223 X (22 k)	T	113.8/36.9
R185	7030005070	S.RES ERJ2GEJ 683 X (68 k)	B	102.3/45.6
R186	7030005160	S.RES ERJ2GEJ 105 X (1 M)	T	81.8/18.9
R187	7030005060	S.RES ERJ2GEJ 333 X (33 k)	T	80.6/17.5
R188	7030005090	S.RES ERJ2GEJ 104 X (100 k)	T	78.5/14.9
R189	7030005720	S.RES ERJ2GEJ 563 X (56 k)	T	78.5/15.8
R190	7030007350	S.RES ERJ2GEJ 393 X (39 k)	T	80.6/18.4
R191	7030004980	S.RES ERJ2GEJ 101 X (100)	T	60.5/47
R192	7030004980	S.RES ERJ2GEJ 101 X (100)	B	66.3/53.2
R193	7030005050	S.RES ERJ2GEJ 103 X (10 k)	B	66.3/45.2
R194	7030005110	S.RES ERJ2GEJ 224 X (220 k)	B	62.7/50.8
R195	7030009320	S.RES ERJ2GEJ 4R7 X (4.7)	B	55.8/50.3
R196	7030005120	S.RES ERJ2GEJ 102 X (1 k)	B	65.2/42.8
R197	7030005050	S.RES ERJ2GEJ 103 X (10 k)	B	64.7/44.5
R198	7030010090	S.RES ERJ2GEJ 180 X (18)	B	36/47.6
R199	7030008280	S.RES ERJ2GEJ 271 X (270)	B	37.3/47.6
R200	7030005050	S.RES ERJ2GEJ 103 X (10 k)	B	8.4/20.6
R201	7410001130	S.ARY EXB28V102JX	B	117/51.7
R202	7030005090	S.RES ERJ2GEJ 104 X (100 k)	B	122.5/44.8
R203	7030005120	S.RES ERJ2GEJ 102 X (1 k)	B	127.4/47.3
R204	7410000750	S.ARY EXB-V4V 104JV (100 k)	B	129.6/42.7
R205	7030008010	S.RES ERJ2GEJ 123 X (12 k)	T	127.5/40.1
R206	7030005120	S.RES ERJ2GEJ 102 X (1 k)	B	127/39.5
R207	7030005050	S.RES ERJ2GEJ 103 X (10 k)	T	120.9/37.5
R208	7030005050	S.RES ERJ2GEJ 103 X (10 k)	T	121.6/38.2
R209	7410001130	S.ARY EXB28V102JX	B	125.8/40.8

M.=Mounted side (T: Mounted on the Top side, B: Mounted on the Bottom side)
S.=Surface mount

[MAIN UNIT]

REF NO.	ORDER NO.	DESCRIPTION	M.	H/V LOCATION
R210	7030008010	S.RES ERJ2GEJ 123 X (12 k)	T	124.2/38.4
R211	7030008010	S.RES ERJ2GEJ 123 X (12 k)	T	125.9/41.1
R212	7030005160	S.RES ERJ2GEJ 105 X (1 M)	T	122.1/41.1
R213	7030005090	S.RES ERJ2GEJ 104 X (100 k)	B	55.3/51.8
R214	7030004980	S.RES ERJ2GEJ 101 X (100)	B	56.4/54
R215	7030005050	S.RES ERJ2GEJ 103 X (10 k)	B	63.5/61.3
R216	7030005590	S.RES ERJ2GEJ 680 X (68)	B	61.9/62.3
R218	7030010040	S.RES ERJ2GEJ-JPW	B	56.4/51.8
R219	7030005050	S.RES ERJ2GEJ 103 X (10 k)	B	46/49.8
R220	7030005040	S.RES ERJ2GEJ 472 X (4.7 k)	B	49.3/52
R221	7030005050	S.RES ERJ2GEJ 103 X (10 k)	B	44.4/49.8
R222	7030005090	S.RES ERJ2GEJ 104 X (100 k)	B	17.7/33.9
R223	7030005090	S.RES ERJ2GEJ 104 X (100 k)	B	16.2/33.9
R224	7030005050	S.RES ERJ2GEJ 103 X (10 k)	B	15.7/32.7
R225	7030005000	S.RES ERJ2GEJ 471 X (470)	B	8/19.2
R226	7030004980	S.RES ERJ2GEJ 101 X (100)	T	109.7/53.5
R227	7030005090	S.RES ERJ2GEJ 104 X (100 k)	B	107.1/49.3
R228	7410001140	S.ARY EXB28V104JX	T	103.3/49
R230	7030005050	S.RES ERJ2GEJ 103 X (10 k)	B	124.7/42.7
R232	7030005530	S.RES ERJ2GEJ 100 X (10)	T	120.4/41.1
R233	7410000750	S.ARY EXB-V4V 104JV (100 k)	T	130/34.7
R234	7410001130	S.ARY EXB28V102JX	B	129.4/34.4
R236	7030009530	S.RES ERJ2GEJ 270 X (27)	B	63.9/71.5
R237	7030005040	S.RES ERJ2GEJ 472 X (4.7 k)	B	65.3/69.7
R238	7030005060	S.RES ERJ2GEJ 333 X (33 k)	B	61.9/65.1
R238	7030008010	S.RES ERJ2GEJ 123 X (12 k)	B	61.9/65.1
R240	7030005570	S.RES ERJ2GEJ 820 X (82)	B	62.4/67.4
R241	7030004980	S.RES ERJ2GEJ 101 X (100)	B	58.5/66
R242	7030004970	S.RES ERJ2GEJ 470 X (47)	T	12/33.1
R243	7030009320	S.RES ERJ2GEJ 4R7 X (4.7)	T	10/36
R244	7030005000	S.RES ERJ2GEJ 471 X (470)	B	15.1/36.3
R245	7030005530	S.RES ERJ2GEJ 100 X (10)	B	11.9/39.9
R246	7030005090	S.RES ERJ2GEJ 104 X (100 k)	B	7.5/38.6
R247	7030004990	S.RES ERJ2GEJ 221 X (220)	B	7.7/36.3
R248	7410001130	S.ARY EXB28V102JX	B	103.9/47.9
R249	7410001130	S.ARY EXB28V102JX	B	123.9/27.6
R250	7410001130	S.ARY EXB28V102JX	B	122.1/25.7
R251	7410001140	S.ARY EXB28V104JX	T	124.7/28.7
R252	7410001140	S.ARY EXB28V104JX	T	122.1/25.7
R253	7030005720	S.RES ERJ2GEJ 563 X (56 k)	T	9.5/40.5
R254	7030005050	S.RES ERJ2GEJ 103 X (10 k)	T	7.4/42.2
R255	7030005310	S.RES ERJ2GEJ 124 X (120 k)	B	6.6/38.6
R256	7030006610	S.RES ERJ2GEJ 394 X (390 k)	T	13/41
R257	7030005040	S.RES ERJ2GEJ 472 X (4.7 k)	T	9/42.2
R258	7030005170	S.RES ERJ2GEJ 474 X (470 k)	T	11/44.5
R259	7030005090	S.RES ERJ2GEJ 104 X (100 k)	B	6/45.1
R260	7030005090	S.RES ERJ2GEJ 104 X (100 k)	B	6/47
R261	7410001130	S.ARY EXB28V102JX	B	99.7/43.5
R262	7410001130	S.ARY EXB28V102JX	T	100.2/37.4
R263	7410001130	S.ARY EXB28V102JX	B	97/40.7
R264	7410001140	S.ARY EXB28V104JX	T	103.8/37
R265	7030005050	S.RES ERJ2GEJ 103 X (10 k)	T	103.8/39.2
R266	7410001130	S.ARY EXB28V102JX	B	120.1/23.5
R267	7410001130	S.ARY EXB28V102JX	B	118.3/21.7
R268	7410001130	S.ARY EXB28V102JX	B	116.5/19.9
R269	7030005090	S.RES ERJ2GEJ 104 X (100 k)	T	119.4/20.8
R271	7030004980	S.RES ERJ2GEJ 101 X (100)	T	77.6/78.5
R272	7030007280	S.RES ERJ2GEJ 331 X (330)	T	61/76.5
R273	7030005050	S.RES ERJ2GEJ 103 X (10 k)	T	62.3/76.1
R274	7030004980	S.RES ERJ2GEJ 101 X (100)	T	56.7/69.3
R275	7030005030	S.RES ERJ2GEJ 152 X (1.5 k)	T	64.8/73.8
R276	7030005040	S.RES ERJ2GEJ 472 X (4.7 k)		
		[EXP-01], [EUR-01]	T	65.8/73.8
	7030007300	S.RES ERJ2GEJ 332 X (3.3 k) [USA-01]	T	65.8/73.8
R277	7030005050	S.RES ERJ2GEJ 103 X (10 k)	B	4.8/45.6
R278	7030005050	S.RES ERJ2GEJ 103 X (10 k)	T	132.2/29.9
R279	7030005090	S.RES ERJ2GEJ 104 X (100 k)	T	131.3/29.9
R280	7410001130	S.ARY EXB28V102JX	B	95.2/38.9
R281	7030005090	S.RES ERJ2GEJ 104 X (100 k)	T	93.7/48.8
R282	7410000750	S.ARY EXB-V4V 104JV (100 k)	T	97.2/45.3
R283	7410001130	S.ARY EXB28V102JX	T	103.1/21.7
R284	7030005120	S.RES ERJ2GEJ 102 X (1 k)	T	111.2/25.1
R285	7410001130	S.ARY EXB28V102JX	B	107.1/19.9
R286	7410001140	S.ARY EXB28V104JX	T	121.7/22.2
R287	7030004990	S.RES ERJ2GEJ 221 X (220)		
		[EXP-01], [EUR-01]	T	55.7/72.6
	7030005580	S.RES ERJ2GEJ 560 X (56) [USA-01]	T	55.7/72.6
R288	7030005100	S.RES ERJ2GEJ 154 X (150 k)	T	54.1/68.2
R289	7030005170	S.RES ERJ2GEJ 474 X (470 k) [USA-01]	B	38/63.7
	7030008300	S.RES ERJ2GEJ 184 X (180 k)		
		[EXP-01], [EUR-01]	B	38/63.7
R290	7520000260	S.POS PRF18BB471QB1RB		
		[USA-01] only	T	33.9/63
R291	7030005120	S.RES ERJ2GEJ 102 X (1 k)	T	109.2/24.5
R292	7030006070	S.RES ERJ12YJ101U (100)	B	43.6/66.1
R293	7030005120	S.RES ERJ2GEJ 102 X (1 k)	T	50.6/70.5
R294	7030005050	S.RES ERJ2GEJ 103 X (10 k)	T	51.7/68.2
R295	7030008290	S.RES ERJ2GEJ 183 X (18 k)	T	50.6/71.4
R296	7030005040	S.RES ERJ2GEJ 472 X (4.7 k)	T	53.8/64.2
R297	7030008010	S.RES ERJ2GEJ 123 X (12 k)	T	50.5/68.6
R298	7030005090	S.RES ERJ2GEJ 104 X (100 k)	T	45.6/69.9
R300	7030005050	S.RES ERJ2GEJ 103 X (10 k)	B	99.9/59.6
R301	7030007290	S.RES ERJ2GEJ 222 X (2.2 k)	T	106.2/55.6
R302	7030000480	S.RES MCR10EZHJ 6.8 k	T	79/64.4
R303	7030000480	S.RES MCR10EZHJ 6.8 k	T	80.9/64.4
R304	7030000440	S.RES MCR10EZHJ 3.3 k	T	82.8/64.4
R305	7030005050	S.RES ERJ2GEJ 103 X (10 k)	T	40.3/19.4
R306	7030005040	S.RES ERJ2GEJ 472 X (4.7 k)	T	41/21.7
R307	7030005050	S.RES ERJ2GEJ 103 X (10 k)	B	27/63
R309	7030005070	S.RES ERJ2GEJ 683 X (68 k)	T	89.9/7.2
R310	7030004980	S.RES ERJ2GEJ 101 X (100)	B	109.3/62.8
R311	7030000220	S.RES MCR10EZHJ 47 (470)	B	15/76.9
R312	7030005700	S.RES ERJ2GEJ 274 X (270 k)	B	31.5/62.4
R313	7030003370	S.RES ERJ3GEYJ 271 V (270)	B	8.6/54

[MAIN UNIT]

REF NO.	ORDER NO.	DESCRIPTION	M.	H/V LOCATION
R314	7030005600	S.RES ERJ2GEJ 273 X (27 k)	B	3/53
R315	7030000220	S.RES MCR10EZHJ 47 (470)	B	3.5/57.4
R316	7030005170	S.RES ERJ2GEJ 474 X (470 k)	T	90.8/11.3
R317	7030005160	S.RES ERJ2GEJ 105 X (1 M)	B	108.3/83.7
R318	7030005160	S.RES ERJ2GEJ 105 X (1 M)	B	112.5/82.7
R319	7030005120	S.RES ERJ2GEJ 102 X (1 k)	B	112.1/81.5
R320	7030005160	S.RES ERJ2GEJ 105 X (1 M)	B	107.2/82.4
R321	7030004970	S.RES ERJ2GEJ 470 X (47)	B	108.4/82
R322	7030005600	S.RES ERJ2GEJ 273 X (27 k)	B	2.1/79.2
R323	7030003370	S.RES ERJ3GEYJ 271 V (270)	B	6.3/78.7
R324	7030000620	S.RES MCR10EZHJ 100 k	B	5.6/85.5
R325	7030005050	S.RES ERJ2GEJ 103 X (10 k)	B	130.5/45.2
R326	7030005090	S.RES ERJ2GEJ 104 X (100 k)	B	131.8/51.7
R327	7030007290	S.RES ERJ2GEJ 222 X (2.2 k)	B	131.1/54.2
R328	7030005090	S.RES ERJ2GEJ 104 X (100 k)	B	134.2/51.7
R331	7030005090	S.RES ERJ2GEJ 104 X (100 k)	T	110.1/21.6
R332	7030005090	S.RES ERJ2GEJ 104 X (100 k)	T	109.6/27.9
R333	7030005120	S.RES ERJ2GEJ 102 X (1 k)	T	109.6/26.9
R334	7030000100	S.RES MCR10EZHJ 4.7 (4R7)	T	101.4/79.7
R335	7030005050	S.RES ERJ2GEJ 103 X (10 k)	T	101.8/83.9
R336	7030005120	S.RES ERJ2GEJ 102 X (1 k)	T	111.3/78.5
R337	7410001130	S.ARY EXB28V102JX	T	104.6/75.9
R338	7030005651	S.RES ERA3YKD 304V (300 k)	T	113.6/54.3
R339	7030005871	S.RES ERA3YKD 104V (100 k)	T	113.6/52.9
R340	7030003560	S.RES ERJ3GEYJ 103 V (10 k)	T	136.3/65.7
R341	7030003560	S.RES ERJ3GEYJ 103 V (10 k)	B	130.7/85.9
R342	7030005090	S.RES ERJ2GEJ 104 X (100 k)	B	135.4/52.2
R343	7030007290	S.RES ERJ2GEJ 222 X (2.2 k)	B	138.2/49.4
R344	7030005110	S.RES ERJ2GEJ 224 X (220 k)	B	133.3/54.6
R345	7030005110	S.RES ERJ2GEJ 224 X (220 k)	B	133.3/56.3
R346	7030008410	S.RES ERJ2GEJ 392 X (3.9 k)	B	137/52.2
R347	7030005050	S.RES ERJ2GEJ 103 X (10 k)	B	137.8/53.7
R348	7030005700	S.RES ERJ2GEJ 274 X (270 k)	B	129.1/77.2
R349	7030005090	S.RES ERJ2GEJ 104 X (100 k)	B	127.8/77.7
R350	7030005120	S.RES ERJ2GEJ 102 X (1 k)	B	139.1/47.8
R351	7030004980	S.RES ERJ2GEJ 101 X (100)	B	136.3/38.1
R352	7030008300	S.RES ERJ2GEJ 184 X (180 k)	B	139.7/39
R353	7030005230	S.RES ERJ2GEJ 334 X (330 k)	B	138.2/47.8
R354	7030010040	S.RES ERJ2GEJ-JPW	T	140.4/36
R355	7030008280	S.RES ERJ2GEJ 271 X (270)	B	139.7/34.3
R356	7540000290	ABS ERZV10D220		
R359	7030005090	S.RES ERJ2GEJ 104 X (100 k)	B	114.8/82.9
R360	7030005090	S.RES ERJ2GEJ 104 X (100 k)	T	80.6/5.3
R361	7030005600	S.RES ERJ2GEJ 273 X (27 k)	T	78.4/5.3
R362	7030005050	S.RES ERJ2GEJ 103 X (10 k)	T	124.8/50.2
R363	7030005120	S.RES ERJ2GEJ 102 X (1 k)	T	42.9/38.3
R364	7030009140	S.RES ERJ2GEJ 272 X (2.7 k)	T	42.9/37.4
R365	7030004970	S.RES ERJ2GEJ 470 X (47)	T	38.3/37.9
R366	7030005050	S.RES ERJ2GEJ 103 X (10 k)	B	131.4/63.4
R367	7030005000	S.RES ERJ2GEJ 471 X (470)	B	130.1/63
R368	7030005050	S.RES ERJ2GEJ 103 X (10 k)	T	78.3/7.6
R370	7030005010	S.RES ERJ2GEJ 681 X (680)	T	71.2/70.4
R371	7030005050	S.RES ERJ2GEJ 103 X (10 k)	T	119.5/84.6
R372	7030005040	S.RES ERJ2GEJ 472 X (4.7 k)	T	25.9/8.1
R373	7030005040	S.RES ERJ2GEJ 472 X (4.7 k)	T	74/21.6
R375	7030005030	S.RES ERJ2GEJ 152 X (1.5 k)	T	27.6/5.3
R376	7030005160	S.RES ERJ2GEJ 105 X (1 M)	B	109.1/12.1
R377	7030005160	S.RES ERJ2GEJ 105 X (1 M)	B	110.9/12.1
R378	7410001140	S.ARY EXB28V104JX	B	100.7/18.3
R379	7030005090	S.RES ERJ2GEJ 104 X (100 k)	T	111.6/23.8
R384	7030005090	S.RES ERJ2GEJ 104 X (100 k)		
R385	7410000750	S.ARY EXB-V4V 104JV (100 k)		
R386	7030005120	S.RES ERJ2GEJ 102 X (1 k)	T	105.8/85.1
R387	7030005120	S.RES ERJ2GEJ 102 X (1 k)	T	107.8/85.1
R389	7030005090	S.RES ERJ2GEJ 104 X (100 k)	T	110.4/10.7
C1	4030017420	S.CER ECJ0EC1H470J	T	88.9/54.3
C2	4030017420	S.CER ECJ0EC1H470J	T	89.9/54.3
C3	4030017420	S.CER ECJ0EC1H470J	T	41.5/15.4
C4	4030017420	S.CER ECJ0EC1H470J	B	50/15
C5	4030017460	S.CER ECJ0EB1E102K	T	89.4/34
C6	4550007080	S.TAN TEESVA 1C 106M8R	T	80.8/55.1
C7	4030017420	S.CER ECJ0EC1H470J	T	84/18.4
C8	4030017420	S.CER ECJ0EC1H470J	T	89.9/52
C9	4030016930	S.CER ECJ0EB1A104K	T	88.9/52
C10	4030016930	S.CER ECJ0EB1A104K	T	80.6/50.7
C11	4030016930	S.CER ECJ0EB1A104K	T	10.9/18.8
C12	4030016930	S.CER ECJ0EB1A104K	T	8.5/7.4
C13	4030016930	S.CER ECJ0EB1A104K	T	85.6/10
C14	4030016930	S.CER ECJ0EB1A104K	T	86.6/10
C15	4030017460	S.CER ECJ0EB1E102K	T	41.5/7.7
C16	4550000460	S.TAN TEESVA 1C 105M8R	T	42.7/6.2
C17	4550000460	S.TAN TEESVA 1C 105M8R	B	42.7/6.2
C18	4030017420	S.CER ECJ0EC1H470J	T	41.5/14.5
C19	4030017420	S.CER ECJ0EC1H470J	B	50/15.9
C20	4030016970	S.CER ECJ0EB1C223K	B	100.9/52.3
C21	4030017420	S.CER ECJ0EC1H470J	T	41.5/13.5
C22	4030017420	S.CER ECJ0EC1H470J	T	41.5/12.6
C23	4030016930	S.CER ECJ0EB1A104K	T	51.8/5.6
C24	4030017420	S.CER ECJ0EC1H470J	B	39.8/9.8
C25	4030017420	S.CER ECJ0EC1H470J	T	61.4/6
C26	4030016930	S.CER ECJ0EB1A104K	B	37.2/5.8
C27	4030017760	S.CER ECJ0EB1H222K	B	36.3/7.5
C28	4030016790	S.CER ECJ0EB1C103K	T	79.3/7.6
C29	4030017460	S.CER ECJ0EB1E102K	T	79/13.6
C30	4030016930	S.CER ECJ0EB1A104K	T	78.1/13.6
C31	4030017460	S.CER ECJ0EB1E102K	T	80.6/51.7
C32	4030017500	S.CER ECJ0EC1H560J	B	33.3/15.9
C33	4030016930	S.CER ECJ0EB1A104K	B	34.8/12.8
C34	4030017570	S.CER ECJ0EC1H040B	B	32.1/15.4
C35	4030017590	S.CER ECJ0EC1H070C	B	30.9/15.9
C36	4030016930	S.CER ECJ0EB1A104K	T	22.4/14.9
C37	4030017360	S.CER ECJ0EC1H030B	B	28.3/15.4

M.=Mounted side (T: Mounted on the Top side, B: Mounted on the Bottom side)
S.=Surface mount

[MAIN UNIT]

REF NO.	ORDER NO.	DESCRIPTION	M.	H/V LOCATION
C38	4030016930	S.CER ECJ0EB1A104K	T	22/6.2
C39	4030016930	S.CER ECJ0EB1A104K	B	13.6/6.2
C40	4030016930	S.CER ECJ0EB1A104K	T	23.8/6.2
C41	4030016930	S.CER ECJ0EB1A104K	T	22/12.5
C42	4030016930	S.CER ECJ0EB1A104K	T	23/12.5
C43	4030017430	S.CER ECJ0EC1H101J	T	26.4/9.4
C44	4030017430	S.CER ECJ0EC1H101J	T	25.5/9.4
C45	4030017790	S.CER ECJ0EB1E682K	B	91.7/10
C46	4030016930	S.CER ECJ0EB1A104K	B	93.8/10
C47	4030016970	S.CER ECJ0EB1C223K	T	92.1/15.1
C48	4030017710	S.CER ECJ0EC1H181J	B	49.7/9.1
C49	4550007080	S.TAN TEESVA 1C 106M8R	T	52.1/15.4
C50	4030017460	S.CER ECJ0EB1E102K	T	54.3/12
C51	4030017400	S.CER ECJ0EC1H220J	T	47.8/19
C52	4030017400	S.CER ECJ0EC1H220J	T	44.7/7.8
C53	4030017900	S.CER ECJ0EB1C123K	T	59.1/10.6
C54	4030018080	S.CER ECJ0EB1H182K	T	59.1/11.5
C55	4030016790	S.CER ECJ0EB1C103K	T	64.5/57
C56	4030017620	S.CER ECJ0EC1H100C	T	87.7/35.5
C57	4030016930	S.CER ECJ0EB1A104K	T	80.1/36.7
C58	4030017430	S.CER ECJ0EC1H101J	T	85.2/38.6
C59	4030017460	S.CER ECJ0EB1E102K	T	81.8/24.3
C60	4030017420	S.CER ECJ0EC1H470J	T	82.9/41.5
C63	4030017620	S.CER ECJ0EC1H100C	T	84/39.1
C64	4030017780	S.CER ECJ0EB1E472K	T	81.3/41.3
C65	4030017460	S.CER ECJ0EB1E102K	T	27.6/10.6
C66	4550006050	S.TAN TEESVA 0J 106M8R	T	31.1/6.8
C67	4030017460	S.CER ECJ0EB1E102K	T	27.6/7.1
C68	4030017460	S.CER ECJ0EB1E102K	T	30.5/9
C69	4030017460	S.CER ECJ0EB1E102K	T	32.6/15.4
C70	4030017420	S.CER ECJ0EC1H470J	B	28.3/13.4
C71	4030016940	S.CER ECJ0EB1A393K	B	91.7/8.3
C72	4030018860	S.CER ECJ0EB0J105K	B	50.7/11
C73	4030017750	S.CER ECJ0EB1E122K	B	51.3/16.6
C74	4030016930	S.CER ECJ0EB1A104K	B	52.3/16.6
C75	4030016930	S.CER ECJ0EB1A104K	B	56.2/12.6
C77	4030017460	S.CER ECJ0EB1E102K	B	54.2/16.6
C78	4030017460	S.CER ECJ0EB1E102K	B	53.7/9
C79	4550007080	S.TAN TEESVA 1C 106M8R	T	66.5/55.3
C80	4030017780	S.CER ECJ0EB1E472K	B	79.2/35
C81	4550000460	S.TAN TEESVA 1C 105M8R	B	82.2/36.4
C82	4030017460	S.CER ECJ0EB1E102K	B	84.1/26.9
C83	4550000460	S.TAN TEESVA 1C 105M8R	B	84/32.5
C84	4030017460	S.CER ECJ0EB1E102K	T	78.2/48.8
C85	4030017380	S.CER ECJ0EC1H050B	B	77.1/47.2
C86	4030017350	S.CER ECJ0EC1H020B	B	74.8/48.3
C87	4030017580	S.CER ECJ0EC1H060C	B	73.7/48.3
C88	4030017380	S.CER ECJ0EC1H050B	B	72.4/48.6
C89	4030017580	S.CER ECJ0EC1H060C	B	71.1/49.1
C90	4030017350	S.CER ECJ0EC1H020B	B	70/49.1
C91	4030016790	S.CER ECJ0EB1C103K	T	27.3/17.3
C92	4030017460	S.CER ECJ0EB1E102K	T	25.2/22.4
C93	4030017680	S.CER ECJ0EC1H820J	T	32.6/12.6
C94	4030017460	S.CER ECJ0EB1E102K	B	27.8/12.5
C95	4030016790	S.CER ECJ0EB1C103K	T	28.9/20.1
C96	4030016930	S.CER ECJ0EB1A104K	B	32.8/8.1
C97	4030016930	S.CER ECJ0EB1A104K	B	29.6/9
C98	4030016930	S.CER ECJ0EB1A104K	B	89.3/7.3
C99	4030016930	S.CER ECJ0EB1A104K	B	90.7/14.8
C100	4030016930	S.CER ECJ0EB1A104K	T	87.3/14.3
C101	4030017710	S.CER ECJ0EC1H181J	T	83.9/7.2
C102	4030016930	S.CER ECJ0EB1A104K	T	108/32.8
C103	4030016930	S.CER ECJ0EB1A104K	B	55.3/19.3
C104	4550003250	S.TAN TEESVA 1V 474M8R	B	67.2/24.2
C105	4030017420	S.CER ECJ0EC1H470J	T	49.2/29.4
C106	4030017460	S.CER ECJ0EB1E102K	B	78/29.1
C107	4030016930	S.CER ECJ0EB1A104K	B	54.2/28.8
C109	4550006480	S.TAN TEESVA 1C 475M8R	B	56.1/27.7
C110	4030017420	S.CER ECJ0EC1H470J	T	60.1/27
C111	4030016930	S.CER ECJ0EB1A104K	B	66.3/30.3
C112	4030017460	S.CER ECJ0EB1E102K	B	67.4/30.3
C113	4030017420	S.CER ECJ0EC1H470J	T	72.1/26.6
C114	4030016790	S.CER ECJ0EB1C103K	T	24.3/22.4
C115	4030016790	S.CER ECJ0EB1C103K	T	23/21.2
C116	4030016790	S.CER ECJ0EB1C103K	T	28.5/22.6
C117	4030017360	S.CER ECJ0EC1H030B		
C118	4030017640	S.CER ECJ0EC1H150J	T	20.5/28.7
C120	4030016790	S.CER ECJ0EB1C103K	T	32.6/22.5
C121	4030017570	S.CER ECJ0EC1H040B	T	34.8/23.5
C122	4030017390	S.CER ECJ0EC1H180J	T	39.8/28.9
C124	4030016930	S.CER ECJ0EB1A104K	B	90.3/18.9
C125	4030017460	S.CER ECJ0EB1E102K	B	128.5/52.6
C126	4030016930	S.CER ECJ0EB1A104K	T	79.6/20.6
C127	4030016930	S.CER ECJ0EB1A104K	B	82.8/20.1
C128	4030016930	S.CER ECJ0EB1A104K	T	78.4/19.3
C129	4030016930	S.CER ECJ0EB1A104K	B	63.7/16.4
C130	4030016930	S.CER ECJ0EB1A104K	B	135.6/25.4
C131	4030017660	S.CER ECJ0EC1H330J	T	135.9/25.7
C132	4030017660	S.CER ECJ0EC1H330J	T	135.9/18
C133	4030017660	S.CER ECJ0EC1H330J [USA-01]	T	48.1/35.5
	4030018010	S.CER ECJ0EC1H360J [EXP-01], [EUR-01]	T	48.1/35.5
C134	4030017640	S.CER ECJ0EC1H150J	T	49.4/34.8
C135	4030017660	S.CER ECJ0EC1H330J	T	64.1/32.5
C136	4030017340	S.CER ECJ0EC1H010B	T	71.1/30.8
C137	4030017570	S.CER ECJ0EC1H040B	T	71.1/29.9
C138	4030017730	S.CER ECJ0EB1E471K	T	71.9/33
C139	4030017630	S.CER ECJ0EC1H120J	T	62.1/32
C140	4030017360	S.CER ECJ0EC1H030B	T	72.5/30.7
C141	4030017360	S.CER ECJ0EC1H030B	T	72.1/29
C142	4030018860	S.CER ECJ0EB0J105K	T	89.5/12.7
C143	4030017400	S.CER ECJ0EC1H220J	T	71.3/36.6
C145	4030016790	S.CER ECJ0EB1C103K	T	31.4/35.2
C147	4030016790	S.CER ECJ0EB1C103K	T	34.5/35.2

[MAIN UNIT]

REF NO.	ORDER NO.	DESCRIPTION	M.	H/V LOCATION
C148	4030016790	S.CER ECJ0EB1C103K	T	30.9/26.4
C149	4030016930	S.CER ECJ0EB1A104K	B	78.2/17.4
C150	4030018560	S.CER C2012 JB 1A 475K-T	B	86.9/19.8
C151	4030016930	S.CER ECJ0EB1A104K	T	112.1/46
C152	4030016930	S.CER ECJ0EB1A104K	T	109.6/34.3
C153	4030017460	S.CER ECJ0EB1E102K	T	111.4/34.3
C154	4030018860	S.CER ECJ0EB0J105K	T	82.7/19.8
C155	4030017420	S.CER ECJ0EC1H470J	T	110.3/38.7
C156	4030017910	S.CER ECJ0EB1H152K	T	104.9/42.3
C157	4030017420	S.CER ECJ0EC1H470J	T	110.8/48.6
C158	4030017430	S.CER ECJ0EC1H101J	T	110.3/37.8
C159	4030017460	S.CER ECJ0EB1E102K	T	120.3/5.5
C160	4030017460	S.CER ECJ0EB1E102K	B	130.6/25.4
C161	4030017670	S.CER ECJ0EC1H390J [USA-01]	T	50.8/43.8
	4030018010	S.CER ECJ0EC1H360J [EXP-01], [EUR-01]	T	50.8/43.8
C162	4030017560	S.CER ECJ0EC1H2R5B	T	52.1/43.4
	4030017580	S.CER ECJ0EC1H060C [USA-01]	T	52.1/43.4
	4030017590	S.CER ECJ0EC1H070C [EXP-01], [EUR-01]	T	52.1/43.4
C163	4030017650	S.CER ECJ0EC1H270J	T	58.7/39.4
C164	4030017400	S.CER ECJ0EC1H220J	T	48.6/45.8
	4030017670	S.CER ECJ0EC1H390J [USA-01]	T	48.6/45.8
	4030018010	S.CER ECJ0EC1H360J [EXP-01], [EUR-01]	T	48.6/45.8
C165	4030017660	S.CER ECJ0EC1H330J	T	49.9/45.4
C166	4030017580	S.CER ECJ0EC1H060C	T	60.1/38.9
C167	4030017420	S.CER ECJ0EC1H470J	T	70/38.9
C168	4030017660	S.CER ECJ0EC1H330J	T	59.1/40.8
C169	4030017670	S.CER ECJ0EC1H390J	T	60.7/40.4
C170	4030017550	S.CER ECJ0EC1H1R5B	T	70.4/36.6
C171	4030017570	S.CER ECJ0EC1H040B	T	70/37.9
C172	4030017400	S.CER ECJ0EC1H220J	T	70/42.9
C173	4030017400	S.CER ECJ0EC1H220J	T	70/43.9
C174	4030017640	S.CER ECJ0EC1H150J	T	38.3/38.8
C175	4030016790	S.CER ECJ0EB1C103K	B	41.4/39.4
C176	4030016930	S.CER ECJ0EB1A104K	B	41/33.2
C177	4030017730	S.CER ECJ0EB1E471K	B	41/32.2
C178	4030016790	S.CER ECJ0EB1C103K	B	34.5/33
C180	4030017740	S.CER ECJ0EB1E821K	T	109.2/48.6
C181	4030016930	S.CER ECJ0EB1A104K	T	112.1/43.2
C182	4030016780	S.CER ECJ0EB1C153K	T	112.1/39.6
C183	4030017420	S.CER ECJ0EC1H470J	T	104.9/45
C184	4030017760	S.CER ECJ0EB1H222K	T	104.9/45.9
C185	4030017690	S.CER ECJ0EC1H121J	T	107.8/48.6
C186	4030016790	S.CER ECJ0EB1C103K	T	51.7/45.4
C187	4030017460	S.CER ECJ0EB1E102K	T	52.6/45.4
C188	4030016790	S.CER ECJ0EB1C103K	T	62.7/40.4
C189	4030017460	S.CER ECJ0EB1E102K	T	63.7/40.4
C190	4030017540	S.CER ECJ0EC1HR75B	T	55/48.3
C191	4030016790	S.CER ECJ0EB1C103K	T	70/40.9
C192	4030017540	S.CER ECJ0EC1HR75B	T	57.7/43
C193	4030017460	S.CER ECJ0EB1E102K	T	70/39.9
C194	4030017530	S.CER ECJ0EC1H0R5B	T	60/44.4
C195	4030016930	S.CER ECJ0EB1A104K	B	39/30
C196	4030017730	S.CER ECJ0EB1E471K	B	38.1/33.2
C197	4030016930	S.CER ECJ0EB1A104K	B	38.1/32.2
C198	4030017730	S.CER ECJ0EB1E471K	B	31.3/38.3
C199	4030016930	S.CER ECJ0EB1A104K	B	31.3/39.2
C200	4030016930	S.CER ECJ0EB1A104K	B	31.3/34
C201	4030017730	S.CER ECJ0EB1E471K	B	31.3/33.1
C202	4030017460	S.CER ECJ0EB1E102K	T	112.1/38.7
C203	4030017460	S.CER ECJ0EB1E102K	B	100.9/47
C205	4030018900	S.CER ECJ0EB0J474K	T	78.4/18.4
C206	4030016930	S.CER ECJ0EB1A104K	T	78.5/16.7
C207	4030017730	S.CER ECJ0EB1E471K	T	61/45.7
C208	4030017460	S.CER ECJ0EB1E102K	T	60/45.7
C209	4030017460	S.CER ECJ0EB1E102K	B	65/52.7
C210	4030017590	S.CER ECJ0EC1H070C	B	57.6/50.3
C211	4030017620	S.CER ECJ0EC1H100C	B	60/51.4
C212	4030017460	S.CER ECJ0EB1E102K	B	63.8/50.8
C213	4030017460	S.CER ECJ0EB1E102K	B	55.6/36.6
C214	4030017460	S.CER ECJ0EB1E102K	B	66.8/41.3
C215	4030017390	S.CER ECJ0EC1H180J	B	38.5/47.6
C216	4030017660	S.CER ECJ0EC1H330J	B	43.1/47.6
C217	4030017730	S.CER ECJ0EB1E471K	B	25/32.7
C218	4030016930	S.CER ECJ0EB1A104K	B	25/31.7
C219	4030017650	S.CER ECJ0EC1H270J	B	23/36.3
C220	4030017600	S.CER ECJ0EC1H080C	B	23/38
C221	4030016930	S.CER ECJ0EB1A104K	B	5.6/23.2
C222	4030017030	S.CER ECJ0EB1A273K	B	128.6/45.3
C223	4030016930	S.CER ECJ0EB1A104K	B	126.3/48.2
C224	4030017640	S.CER ECJ0EC1H150J	T	124.2/40.1
C225	4030016790	S.CER ECJ0EB1C103K	T	124.2/37.4
C226	4030017580	S.CER ECJ0EC1H060C	T	124.2/41.1
C227	4030017460	S.CER ECJ0EB1E102K	B	57.6/53.5
C228	4030017460	S.CER ECJ0EB1E102K	B	56.4/53.1
C229	4030017620	S.CER ECJ0EC1H100C	B	52.1/53.1
C230	4030017460	S.CER ECJ0EB1E102K	B	63.5/62.3
C231	4030017360	S.CER ECJ0EC1H030B	B	66.3/52.2
C232	4030017460	S.CER ECJ0EB1E102K	B	68.6/49.5
C234	4030017390	S.CER ECJ0EC1H180J [EXP-01], [EUR-01] only	B	52.1/54
C235	4030017460	S.CER ECJ0EB1E102K	B	44.4/50.7
C236	4030017390	S.CER ECJ0EC1H180J	B	47.8/48.1
C237	4030017620	S.CER ECJ0EC1H100C	B	47.4/49.4
C240	4030017460	S.CER ECJ0EB1E102K	B	18.9/34.4
C241	4030017360	S.CER ECJ0EC1H030B	B	17/37.7
C242	4030017460	S.CER ECJ0EB1E102K	B	15/34.4
C243	4030017460	S.CER ECJ0EB1E102K	B	18.9/33.5
C244	4030017460	S.CER ECJ0EB1E102K	B	15.7/31.7
C245	4550006780	S.TAN TEESVB2 0J 476M8R	B	5.6/18.7
C246	4030016930	S.CER ECJ0EB1A104K	B	105.1/52.2

M.=Mounted side (T: Mounted on the Top side, B: Mounted on the Bottom side)
S.=Surface mount

[MAIN UNIT]

REF NO.	ORDER NO.	DESCRIPTION	M.	H/V LOCATION
C247	4030016930	S.CER ECJ0EB1A104K	B	107/52.9
C248	4030016930	S.CER ECJ0EB1A104K	B	108.1/52
C249	4030018900	S.CER ECJ0EB0J474K	B	121.8/47.4
C250	4030017630	S.CER ECJ0EC1H120J	T	120.4/40.1
C251	4030017400	S.CER ECJ0EC1H220J	B	61.9/64.2
C252	4030017420	S.CER ECJ0EC1H470J	B	62.6/71.1
C253	4030017730	S.CER ECJ0EB1E471K	B	61.6/71.1
C254	4030017420	S.CER ECJ0EC1H470J	B	63.9/69.5
C255	4030017390	S.CER ECJ0EC1H180J [EXP-01], [EUR-01] only	B	61.9/63.2
C256	4030017460	S.CER ECJ0EB1E102K	B	59.7/65.5
C257	4030017460	S.CER ECJ0EB1E102K	B	63.4/67.4
C258	4030017460	S.CER ECJ0EB1E102K	T	13.9/32.5
C259	4030017460	S.CER ECJ0EB1E102K	T	10/35
C260	4030017620	S.CER ECJ0EC1H100C	B	14.2/36.3
C261	4030017460	S.CER ECJ0EB1E102K	B	9.5/33.9
C262	4030017460	S.CER ECJ0EB1E102K	B	13.7/37.7
C263	4030017490	S.CER C1608 JB 1A 105K-T	T	14.1/33.7
C264	4030017350	S.CER ECJ0EC1H020B	B	8.4/38.6
C265	4030017420	S.CER ECJ0EC1H470J	B	8.6/36.3
C266	4030017460	S.CER ECJ0EB1E102K	B	9.5/36.3
C267	4030017460	S.CER ECJ0EB1E102K	B	63.9/70.5
C268	4030017640	S.CER ECJ0EC1H150J	B	68.2/69.1
C269	4030017390	S.CER ECJ0EC1H180J [USA-01]	B	69.7/69.1
	4030017650	S.CER ECJ0EC1H270J [EXP-01], [EUR-01]	B	69.7/69.1
C270	4030017390	S.CER ECJ0EC1H180J	B	71.2/69
C271	4030017390	S.CER ECJ0EC1H180J [EXP-01], [EUR-01]	T	74.3/71.7
	4030017400	S.CER ECJ0EC1H220J [USA-01]	T	74.3/71.7
C272	4030016930	S.CER ECJ0EB1A104K	T	7.9/39.5
C273	4030016930	S.CER ECJ0EB1A104K	T	9.5/39.5
C274	4030017460	S.CER ECJ0EB1E102K	T	7.4/41.2
C275	4030016930	S.CER ECJ0EB1A104K	T	15/41
C276	4030017620	S.CER ECJ0EC1H100C	B	10.5/41
C277	4030017460	S.CER ECJ0EB1E102K	T	14/41
C278	4030017350	S.CER ECJ0EC1H020B	B	8.9/43.6
C279	4030017460	S.CER ECJ0EB1E102K	B	6.9/44.2
C280	4030017550	S.CER ECJ0EC1H1R5B	B	9.4/46.1
C281	4030017420	S.CER ECJ0EC1H470J	T	97.9/34.2
C282	4030017420	S.CER ECJ0EC1H470J	T	102.1/40
C283	4030017420	S.CER ECJ0EC1H470J	B	97.4/44.6
C284	4030017420	S.CER ECJ0EC1H470J	T	94.8/35.5
C285	4030017420	S.CER ECJ0EC1H470J	B	94.2/44.4
C286	4030017420	S.CER ECJ0EC1H470J	T	92.1/43.3
C287	4030017420	S.CER ECJ0EC1H470J	T	92.1/41.6
C288	4030017460	S.CER ECJ0EB1E102K	B	4.8/46.5
C290	4030017400	S.CER ECJ0EC1H220J	T	74.3/73.6
C291	4030017730	S.CER ECJ0EB1E471K	T	69.3/76.1
C292	4550000560	S.TAN TEESVA 1V 334M8R	T	67.6/74.4
C294	4030017420	S.CER ECJ0EC1H470J	T	70.4/76.1
C295	4030017420	S.CER ECJ0EC1H470J	T	56.7/67.3
C296	4510008530	S.ELE EEE1HA2R2SR	T	59.6/80
C297	4030017460	S.CER ECJ0EB1E102K	T	56.7/68.3
C299	4030017460	S.CER ECJ0EB1E102K	B	6.9/47.9
C300	4030017340	S.CER ECJ0EC1H010B	B	8.9/48.5
C301	4030017580	S.CER ECJ0EC1H060C	B	13.2/49.5
C302	4030017460	S.CER ECJ0EB1E102K	B	4.4/44.4
C303	4030016930	S.CER ECJ0EB1A104K	B	129.6/32
C304	4030017420	S.CER ECJ0EC1H470J	B	90/43.4
C305	4030011140	S.CER GRM31M2C2H120JV01L	T	27.6/78.7
C306	4030011120	S.CER GRM31M2C2H100JV01L	T	27.6/76.1
C307	4030011120	S.CER GRM31M2C2H100JV01L	T	27.7/71.8
C308	4030011070	S.CER GRM31M2C2H5R0CY21L [USA-01]	T	27.7/69.2
	4030011140	S.CER GRM31M2C2H120JV01L [EXP-01], [EUR-01]	T	27.7/69.2
C309	4030017460	S.CER ECJ0EB1E102K	T	71.5/76.1
C310	4030017420	S.CER ECJ0EC1H470J	T	43/76.1
C311	4030017460	S.CER ECJ0EB1E102K	T	44.1/76.1
C312	4030017730	S.CER ECJ0EB1E471K	T	45.3/76.1
C313	4510008680	S.ELE EEE1EA220SP	T	51.7/77.7
C314	4030017730	S.CER ECJ0EB1E471K	B	40.2/68.3
C315	4030017460	S.CER ECJ0EB1E102K	T	55.7/73.6
C316	4030016790	S.CER ECJ0EB1C103K	T	54.1/72.6
C317	4030011600	S.CER C1608 JB 1E 104K-T	T	54.1/67
C318	4030017460	S.CER ECJ0EB1E102K [USA-01] only	T	35.1/63.3
C319	4030017460	S.CER ECJ0EB1E102K [USA-01] only	T	47.3/67.4
C320	4030017580	S.CER ECJ0EC1H060C	B	15/52.7
C321	4030017460	S.CER ECJ0EB1E102K	B	14.9/49.5
C322	4030017600	S.CER ECJ0EC1H080C	B	19.3/52
C323	4030017570	S.CER ECJ0EC1H040B	B	20/49.6
C324	4030017420	S.CER ECJ0EC1H470J	B	90/41.8
C325	4030017460	S.CER ECJ0EB1E102K	T	72.5/64.9
C326	4030017420	S.CER ECJ0EC1H470J	B	46.2/64.3
C327	4030017460	S.CER ECJ0EB1E102K	B	84.2/79
C328	4030017460	S.CER ECJ0EB1E102K	B	83.2/79
C329	4030017460	S.CER ECJ0EB1E102K	B	82.1/79
C330	4030017460	S.CER ECJ0EB1E102K	B	81/79
C331	4030017460	S.CER ECJ0EB1E102K	B	80/79
C332	4030016930	S.CER ECJ0EB1A104K	T	51.9/71.9
C334	4030017460	S.CER ECJ0EB1E102K	T	49.5/68.6
C335	4030017460	S.CER ECJ0EB1E102K	T	53.8/63.2
C336	4030017580	S.CER ECJ0EC1H060C	B	20.8/52
C337	4030017390	S.CER ECJ0EC1H180J	B	25.1/51.2
C338	4510008600	S.ELE EEE1CA4R7NR	T	79.1/69.1
C339	4030017460	S.CER ECJ0EB1E102K	T	79.1/62.1
C340	4030017460	S.CER ECJ0EB1E102K	T	37.5/20.8
C341	4030016790	S.CER ECJ0EB1C103K	T	41.9/19.4
C342	4030017200	S.CER GRM31BR32J102KY01L	T	25.3/62.5
C343	4030011270	S.CER GRM31M2C2H200JV01L	T	22.1/63.9
C345	4030011170	S.CER GRM31M2C2H180JV01L	T	17.3/57.4
C346	4030011170	S.CER GRM31M2C2H180JV01L	T	30.2/62.8
C347	4030017520	S.CER ECJ0EC1H0R3B	B	25.4/63

[MAIN UNIT]

REF NO.	ORDER NO.	DESCRIPTION	M.	H/V LOCATION
C348	4030017460	S.CER ECJ0EB1E102K	B	31.5/63.4
C349	4030016930	S.CER ECJ0EB1A104K	T	100.5/63.5
C350	4550005980	S.TAN TEESVA 1A 475M8R	T	101.6/62
C351	4030016930	S.CER ECJ0EB1A104K [USA-01]	T	110.6/67.4
	4030018860	S.CER ECJ0EB0J105K [EXP-01], [EUR-01]	T	110.6/67.4
C352	4030017460	S.CER ECJ0EB1E102K	B	124.6/59.6
C353	4550005980	S.TAN TEESVA 1A 475M8R	B	124.5/61.3
C354	4550006250	S.TAN TEESVA 1A 106M8R	B	112.9/61.7
C355	4030017420	S.CER ECJ0EC1H470J	B	112.6/60.1
C356	4030011270	S.CER GRM31M2C2H200JV01L	T	14.7/62.9
C357	4030011270	S.CER GRM31M2C2H200JV01L	T	10.4/62.9
C358	4030007030	S.CER C1608 CH 1H 150J-T	B	10.6/56.4
C359	4030011340	S.CER C1608 CH 1H 471J-T	B	9.4/56.4
C360	4030017460	S.CER ECJ0EB1E102K	B	4/53
C361	4030017460	S.CER ECJ0EB1E102K	T	103.9/53.5
C362	4030017460	S.CER ECJ0EB1E102K	T	108.2/24.5
C363	4510008540	S.ELE EEE1CA100SR	T	139.1/31.9
C365	4550007650	S.TAN F931V105MAABMA	B	106.7/65
C366	4550007650	S.TAN F931V105MAABMA	B	104.2/65
C367	4550007650	S.TAN F931V105MAABMA	B	101.6/65
C368	4550007650	S.TAN F931V105MAABMA	B	99.5/64.6
C369	4030011270	S.CER GRM31M2C2H200JV01L	T	15.8/78.9
C370	4030011270	S.CER GRM31M2C2H200JV01L	T	15.8/83.1
C371	4030017460	S.CER ECJ0EB1E102K	B	4.1/81.6
C372	4030006850	S.CER C1608 JB 1H 471K-T	B	8.3/77.1
C373	4030016930	S.CER ECJ0EB1A104K	B	130.9/51.7
C374	4030016930	S.CER ECJ0EB1A104K	B	133/51.3
C375	4030016930	S.CER ECJ0EB1A104K	B	132.4/54.6
C377	4030017460	S.CER ECJ0EB1E102K	T	105.9/51.9
C378	4030017460	S.CER ECJ0EB1E102K	T	108.2/78
C379	4030016930	S.CER ECJ0EB1A104K	B	108.4/80.3
C380	4030017460	S.CER ECJ0EB1E102K	B	120.5/83.2
C381	4030016790	S.CER ECJ0EB1C103K	B	135.9/70.5
C383	4030017460	S.CER ECJ0EB1E102K	B	135.9/71.5
C384	4510008870	S.ELE EEE1AA471UP	T	129.9/64.9
C386	4030016930	S.CER ECJ0EB1A104K	B	138.8/53.7
C387	4030017720	S.CER ECJ0EB1H331K	B	135.4/51.3
C388	4030018860	S.CER ECJ0EB0J105K	B	138.6/52.2
C389	4030016930	S.CER ECJ0EB1A104K	B	139.1/49.4
C390	4030016930	S.CER ECJ0EB1A104K	B	137.8/55.4
C391	4030016930	S.CER ECJ0EB1A104K	T	101.8/82.3
C392	4030017460	S.CER ECJ0EB1E102K	B	127.8/76.8
C393	4030017460	S.CER ECJ0EB1E102K	B	99/79
C394	4030017420	S.CER ECJ0EC1H470J	B	115.4/68
C395	4030017460	S.CER ECJ0EB1E102K	B	126.5/77.1
C397	4030017460	S.CER ECJ0EB1E102K	B	99.8/86.3
C398	4030017420	S.CER ECJ0EC1H470J	B	100.8/86.3
C399	4030018860	S.CER ECJ0EB0J105K	B	136.3/37.1
C400	4030016930	S.CER ECJ0EB1A104K	B	139.7/35.3
C411	4510008780	S.ELE EEE1EA471P	T	117.2/63.6
C412	4510008780	S.ELE EEE1EA471P	T	132.7/54.3
C413	4030018900	S.CER ECJ0EB0J474K	B	135.1/46.8
C414	4510008540	S.ELE EEE1CA100SR	T	118.7/50.5
C415	4030016930	S.CER ECJ0EB1A104K	B	103/23.8
C416	4030016930	S.CER ECJ0EB1A104K	B	120.3/51.6
C417	4030016790	S.CER ECJ0EB1C103K	B	115.6/52.8
C418	4030017460	S.CER ECJ0EB1E102K	T	109.6/54.5
C419	4030016790	S.CER ECJ0EB1C103K	T	42.9/39.2
C420	4030017500	S.CER ECJ0EC1H560J	T	41/37.4
C421	4030016930	S.CER ECJ0EB1A104K	B	36/24.7
C422	4030016790	S.CER ECJ0EB1C103K	T	43.1/31.9
C423	4030017670	S.CER ECJ0EC1H390J	T	39.9/35.3
C424	4030016930	S.CER ECJ0EB1A104K	T	38.9/32.2
C425	4030017460	S.CER ECJ0EB1E102K	B	134.8/66.1
C426	4030018860	S.CER ECJ0EB0J105K	B	110/12.1
C427	4030017460	S.CER ECJ0EB1E102K	B	109.1/10.4
C428	4030017460	S.CER ECJ0EB1E102K		
C430	4030017570	S.CER ECJ0EC1H040B	T	78.2/44.8
J1	6510025220	S.CNR AXK540145J	T	124.5/9.7
J2	6510025220	S.CNR AXK540145J	T	101.5/9.7
J3	6510021301	S.CNR 52365-1071	T	90.3/62.6
J4	6510021301	S.CNR 52365-1071		
J5	6510023091	S.CNR 20FLT-SM2-TB (LF) (SN)	T	108.3/81.8
J7	6450000140	CNR HSJ0807-01-010		
J10	6510023091	S.CNR 20FLT-SM2-TB (LF) (SN)	T	71/7
W1	7120000470	JMP ERDS2T0		
W2	8900016250	CBL OPC-1701		
EP1	6910015600	S.BEA ACZ1005Y-241 (240)	B	39.8/8.1
EP2	6910015370	S.BEA ACZ1005Y-102-T	B	50.1/12.4
EP3	6910015370	S.BEA ACZ1005Y-102-T	T	82.6/37.1
EP4	6910010280	BEA HF70BB9.5X10.4X4.9		
EP5	6910010280	BEA HF70BB9.5X10.4X4.9		
EP6	6910011560	BEA HF70BB4.5X5X1.6		

M.=Mounted side (T: Mounted on the Top side, B: Mounted on the Bottom side)
S.=Surface mount

[CONNECT UNIT]

REF NO.	ORDER NO.	DESCRIPTION	M.	H/V LOCATION
C601	4030017420	S.CER ECJ0EC1H470J	T	12.7/4.6
C602	4030017420	S.CER ECJ0EC1H470J	T	15.4/4.6
C603	4030017420	S.CER ECJ0EC1H470J	T	18.2/4.6
C604	4030017420	S.CER ECJ0EC1H470J	T	19.6/4.6
C605	4030017420	S.CER ECJ0EC1H470J	T	20.9/4.6
C606	4030017420	S.CER ECJ0EC1H470J	T	25.1/4.6
C607	4030017420	S.CER ECJ0EC1H470J	T	37.5/13.2
C608	4030017420	S.CER ECJ0EC1H470J	T	16.8/4.6
C609	4030017420	S.CER ECJ0EC1H470J	T	40.3/13.2
C610	4030017420	S.CER ECJ0EC1H470J	T	41.7/4.6
J601	6510025240	S.CNR IMSA-9631S-20Y912	B	32.2/16.2
J602	6510023210	CNR CD6125SA1J0 <CVI>		
W601	8900012711	CBL OPC-1297A (P0.5,N20,L62)		

M.=Mounted side (T: Mounted on the Top side, B: Mounted on the Bottom side)
S.=Surface mount

BOARD LAYOUTS

• HM-152 (TOP VIEW)

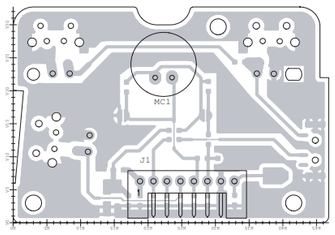

• CONNECT UNIT (TOP VIEW)

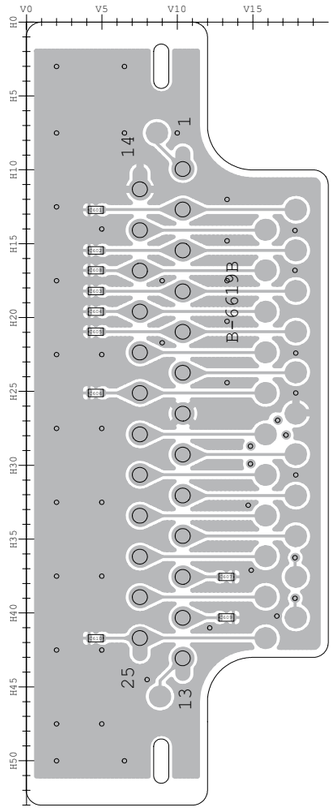

• MAIN UNIT (TOP VIEW)

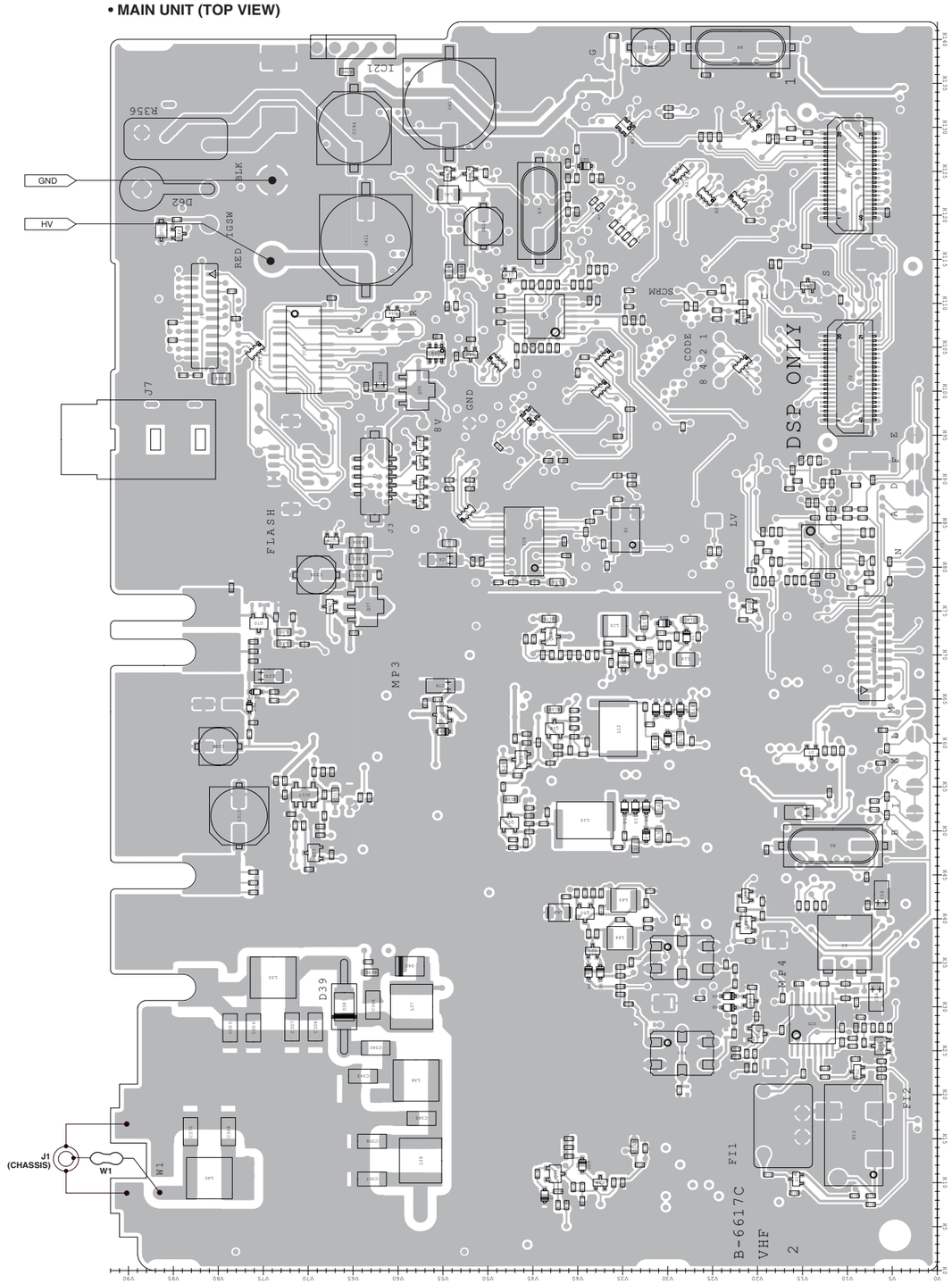

J1		
20	DASW	NC
	PFMF	CCK
	EMPH	CSI
	GND	CSO
	OPT3	NC
	OPT2	CIRQ
	OPT1	CCS
	SIGO	REM
	BUSY	NC
	NC	AFOUT
	NC	DISC
	NC	RMUT
	NC	BEPO
	MCIN	AFON
	NC	MMUTI
	MCOT	NC
	PTTO	VCC
	PTTI	+5V
	GND	GND
1	NC	NC

J2		
20	GND	GND
	GND	CCK
	NC	CSI
	GND	CSO
	OPT3	NC
	OPT2	CIRQ
	OPT1	CCS
	NC	NC
	NC	DAFO
	NC	NC
	VREF	DISC
	NC	NC
	DMI	NC
	NC	NC
	DMO	NC
	NC	NC
	NC	8V
	NC	+5V
	GND	GND
1	D_IF	D_IF

J10		
19	VCC	VCC
	GND	NC
	MFDA	8V
	POSW	FMDA
	MCIN	MICE
	AFO	MICE
	SP-	NC
	NC	SP-
	SP+	SP+
1	GND	GND

• FRONT UNIT (TOP VIEW)

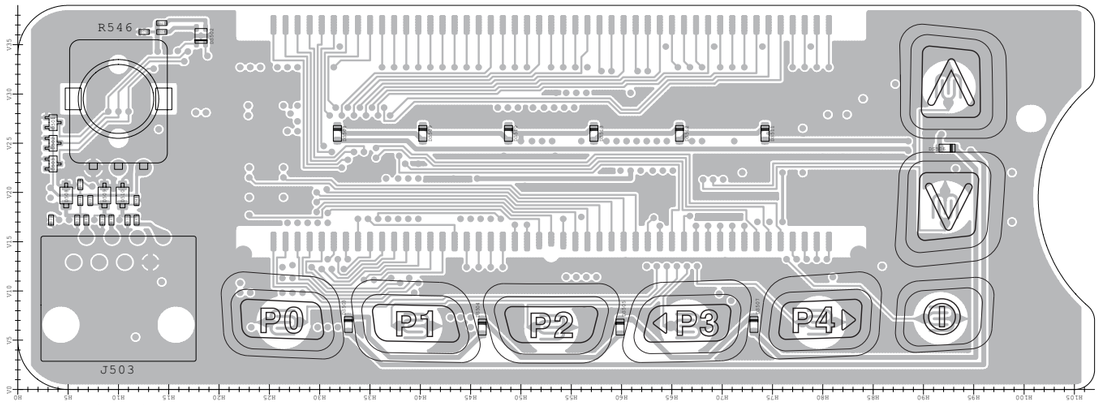

J503		
1	8V	CLO
	AFO	PTT
	MICE	MIC
7	GND	CLI

The combination of this side and the bottom side shows the board layout in the same configuration as the actual P.C.Board.

• MAIN UNIT (BOTTOM VIEW)

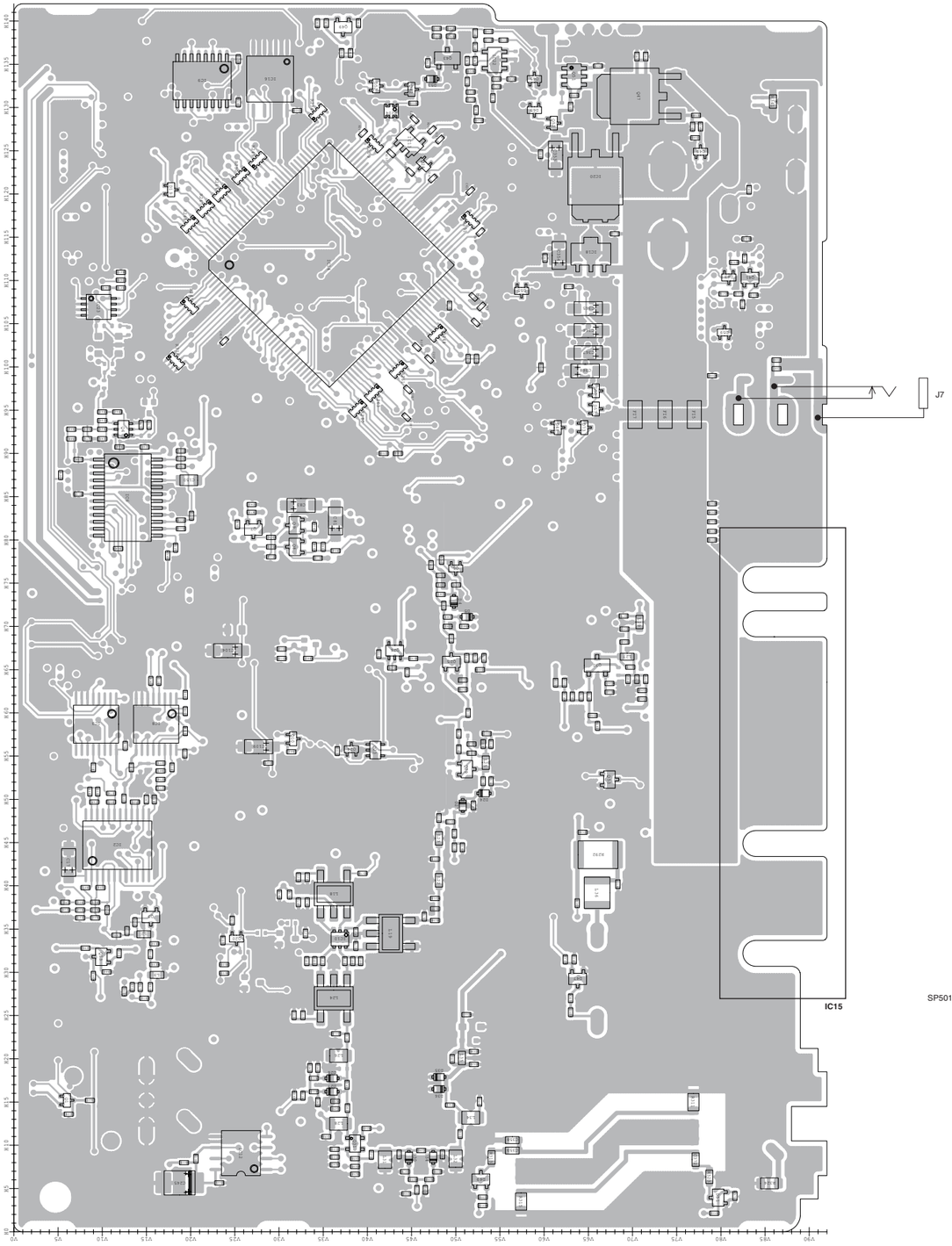

• CONNECT UNIT (BOTTOM VIEW)

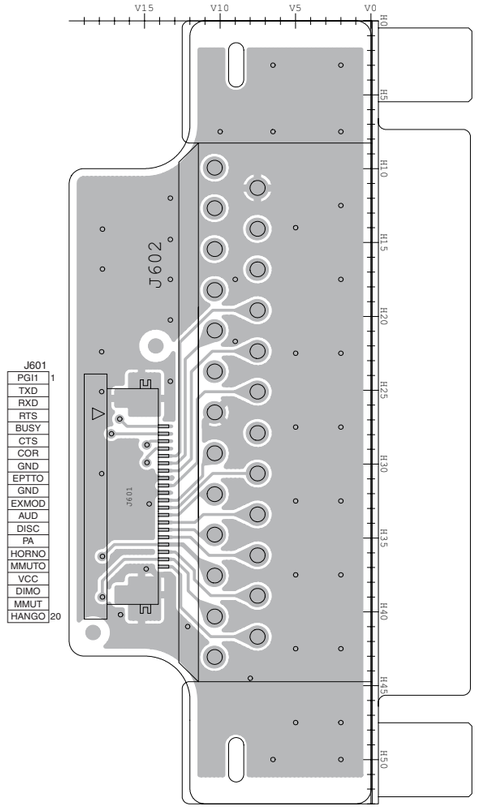

• HM-152 (BOTTOM VIEW)

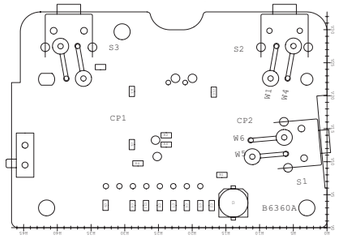

• FRONT UNIT (BOTTOM VIEW)

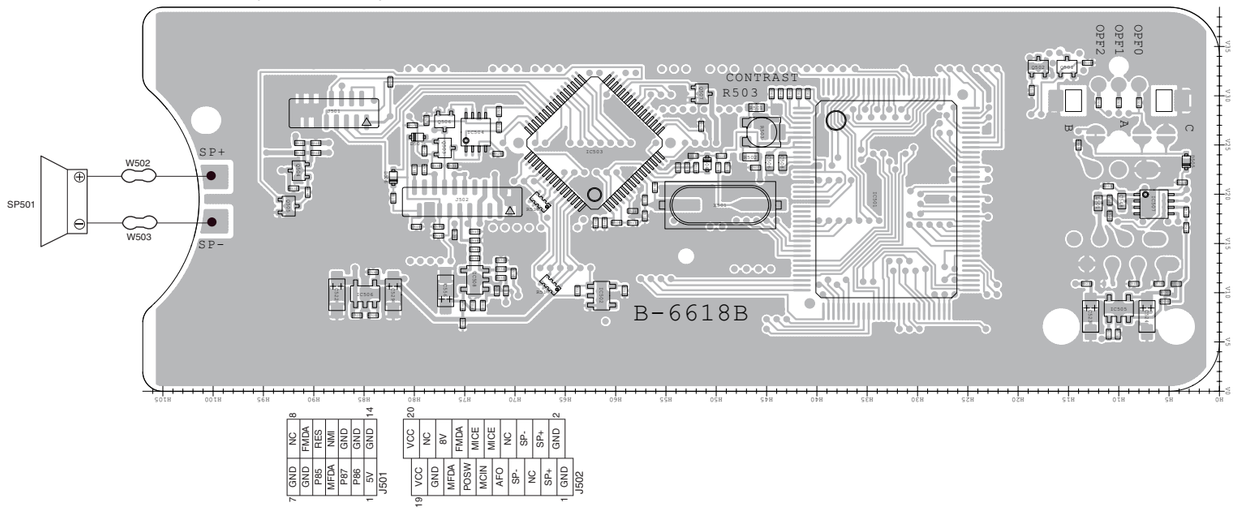

VOLTAGE DIAGRAM

FRONT UNIT

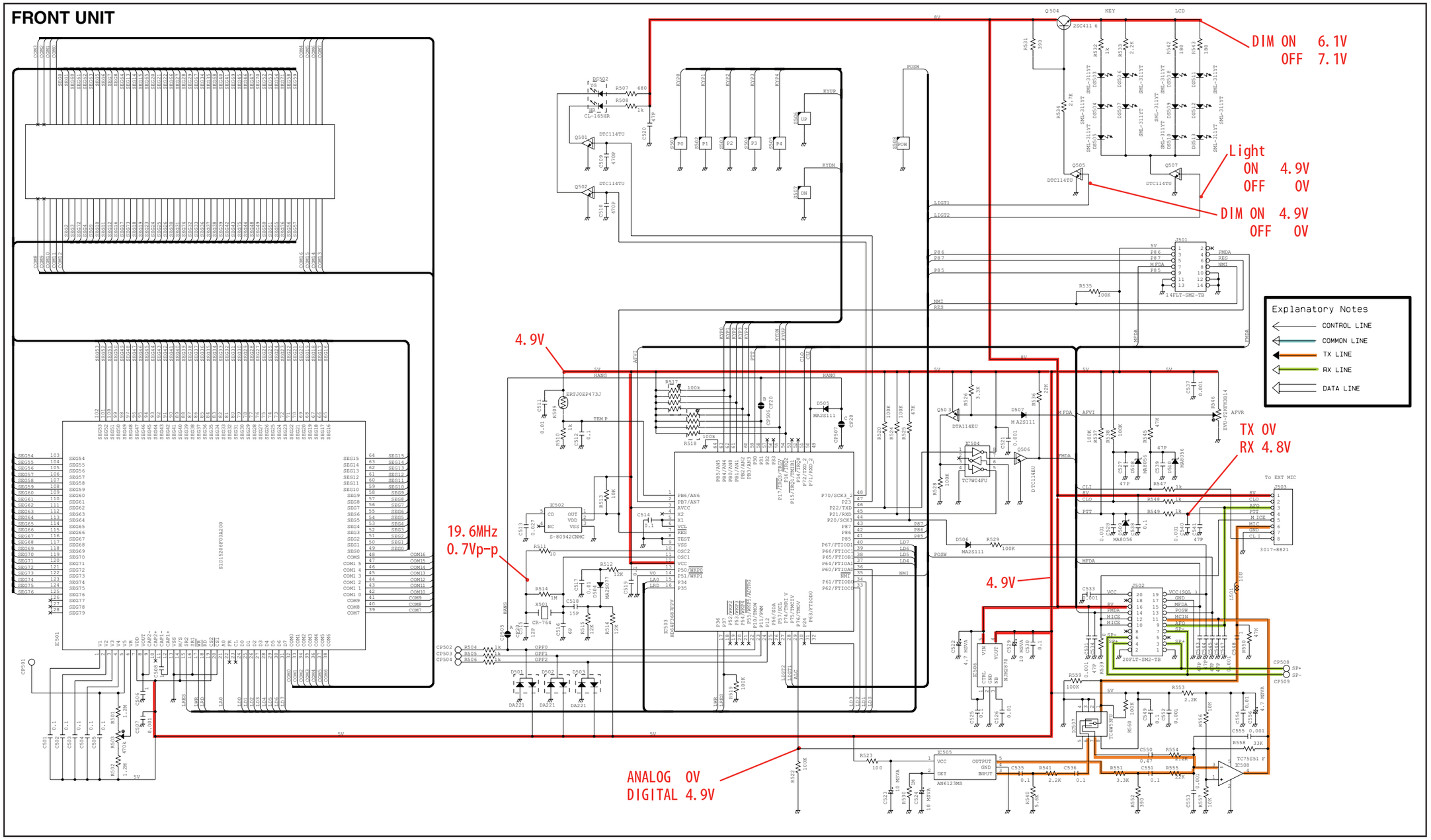

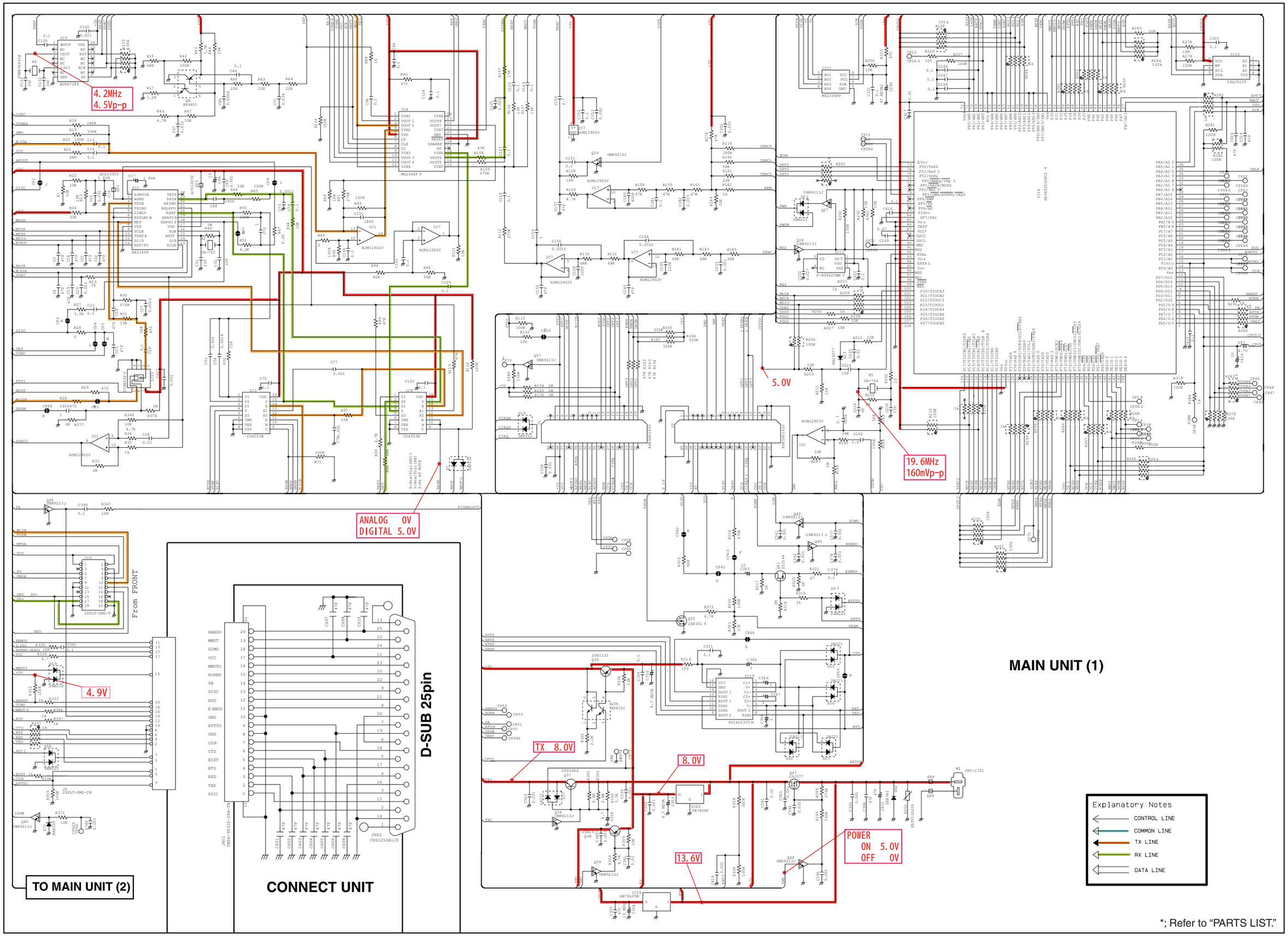

*; Refer to "PARTS LIST."

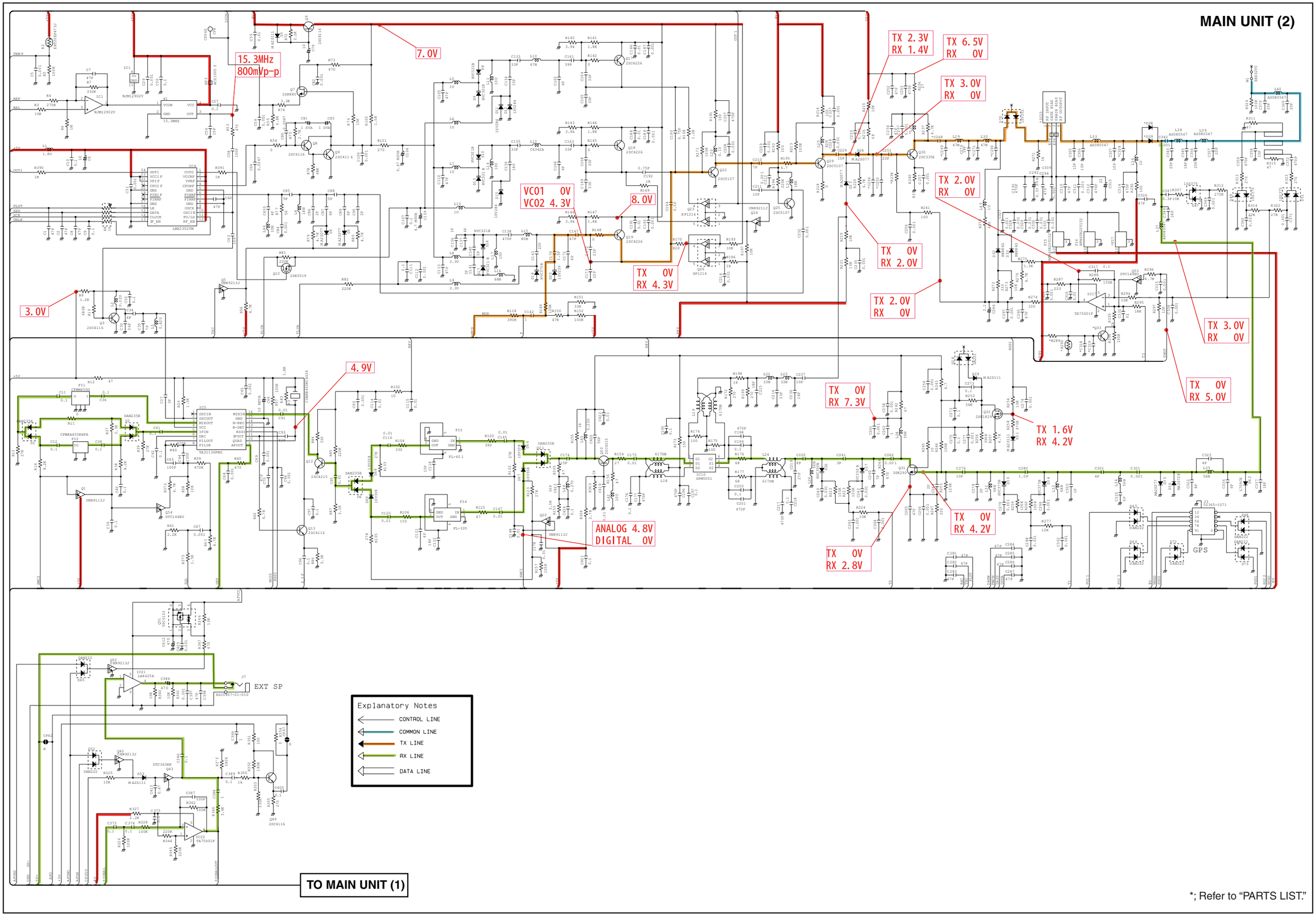

*; Refer to "PARTS LIST."

ICOM

SERVICE MANUAL

VHF TRANSCEIVERS

IC-F5061
IC-F5062
IC-F5063

S-14319XZ-C1
Feb. 2007

Icom Inc.

INTRODUCTION

This service manual describes the latest service information for the **IC-F5061/F5062/F5063** VHF TRANSCEIVERS at the time of publication.

MODEL	VERSION	CHANNEL SPACING	TX POWER
IC-F5061	USA-01	15.0/30.0 kHz	50 W
IC-F5062	EXP-01	12.5/25.0 kHz	25 W
IC-F5063	EUR-01	12.5/20/25.0 kHz	

To upgrade quality, any electrical or mechanical parts and internal circuits are subject to change without notice or obligation.

CAUTION

NEVER connect the transceiver to an AC outlet or to a DC power supply that uses more than 15 V. This will ruin the transceiver.

DO NOT expose the transceiver to rain, snow or any liquids.

DO NOT reverse the polarities of the power supply when connecting the transceiver.

DO NOT apply an RF signal of more than 20 dBm (100 mW) to the antenna connector. This could damage the transceiver' s front end.

ORDERING PARTS

Be sure to include the following four points when ordering replacement parts:

1. 10-digit Icom parts numbers
2. Component part number and name
3. Equipment model name and unit name
4. Quantity required

<SAMPLE ORDER>

1110003491	S.IC	TA31136FNG	IC-F5061	MAIN UNIT	5 pieces
8820001210	Screw	2438 screw	IC-F5062	Top cover	10 pieces

Addresses are provided on the inside back cover for your convenience.

REPAIR NOTES

1. Make sure a problem is internal before disassembling the transceiver.
2. **DO NOT** open the transceiver until the transceiver is disconnected from its power source.
3. **DO NOT** force any of the variable components. Turn them slowly and smoothly.
4. **DO NOT** short any circuits or electronic parts. An insulated tuning tool **MUST** be used for all adjustments.
5. **DO NOT** keep power ON for a long time when the transceiver is defective.
6. **DO NOT** transmit power into a signal generator or a sweep generator.
7. **ALWAYS** connect a 50 dB to 60 dB attenuator between the transceiver and a deviation meter or spectrum analyzer when using such test equipment.
8. **READ** the instructions of test equipment thoroughly before connecting equipment to the transceiver.

Icom, Icom Inc. and ICOM logo are registered trademarks of Icom Incorporated (Japan) in the United States, the United Kingdom, Germany, France, Spain, Russia and/or other countries.

CONTENTS

SECTION 1 SPECIFICATIONS

SECTION 2 INSIDE VIEWS

SECTION 3 DISASSEMBLY INSTRUCTIONS

SECTION 4 OPTIONAL UNITS INSTALLATIONS

SECTION 5 CIRCUIT DESCRIPITON

5-1 RECEIVER CIRCUITS 5-1
5-2 TRANSMITTER CIRCUITS 5-2
5-3 FREQUENCY SYNTHESIZER CIRCUITS 5-3
5-4 POWER SUPPLY CIRCUITS 5-4
5-5 PORT ALLOCATIONS 5-5

SECTION 6 ADJUSTMENT PROCEDURES

6-1 PREPARATION 6-1
6-2 FREQUENCY ADJUSTMENT 6-2
6-3 TRANSMIT ADJUSTMENT 6-3
6-4 RECEIVE ADJUSTMENT 6-4

SECTION 7 PARTS LIST

SECTION 8 MECHANICAL PARTS AND DISASSEMBLY

SECTION 9 BOARD LAYOUTS

SECTION 10 BLOCK DIAGRAM

SECTION 11 VOLTAGE DIAGRAM

SECTION 12 HM-152

SECTION 1 SPECIFICATIONS

				[USA]	[EXP]	[EUR]
GENERAL	• Frequency coverage			136–174 MHz		
	• Type of emission		Wide	16K0F3E (25.0 kHz)		
			Middle	–		14K0F3E (20.0 kHz)
			Narrow	11K0F3E (12.5 kHz) 8K10F1E/D (12.5 kHz) 4K00F1E/D(6.25 kHz)	8K50F3E (12.5 kHz) 4K00F1E/D (6.25 kHz)	
	• Number of programable channels			max. 512 channels (128 zones)		
	• Antenna impedance			50 Ω (nominal)		
	• Operating temperature range			–30˚ to +60˚; –22˚F to +140˚F		–25˚C to +55˚C
	• Power supply requirement (negative ground)			13.6 V DC (nominal)	13.2 V DC (nominal)	
	• Current drain (approx.)	RX	Stand-by	300 mA		
			Max.audio	1200 mA		
		TX	at 25 W	7 A		
			at 50 W	14 A		
	• Dimensions (projections not included)			160 (W) × 45 (H) × 150 (D) mm; 2 3/32 (W) × 4 23/32 (H) × 1 9/32 (D) in		
	• Weight (with BP-231, approx.)			1310 g; 2 lb 14 oz		
TRANSMITTER	• Transmit output power			50 W	25 W	
	• Modulation			Variable reactance frequency modulation		
	• Max. permissible deviation		Wide	±5.0 kHz		
			Middle	–		±4.0 kHz
			Narrow	±2.5 kHz		
	• Frequency error			±1.0 ppm	±1.5 kHz	
	• Spurious emission			75 dB typ.		0.25 μW (≤1 GHz), 1.0 μW (>1 GHz)
	• Adjacent channel power		Wide	More than 70 dB		
			Middle	–		More than 70 dB
			Narrow	More than 60 dB		
	• Audio harmonic distortion			3% typ. (with 1 kHz AF 40% deviation)		
	• FM hum and noise (without CCITT filter)		Wide	More than 40 dB (45 dB typ.)		–
			Narrow	More than 34 dB (40 dB typ.)		–
	• Limiting charact of modulation			70–100% of max. deviation		
	• Microphone impedance			600 Ω		
RECEIVER	• Receive system			Double-conversion superheterodyne		
	• Intermediate frequencies			1st IF; 46.35 MHz, 2nd IF; 450 kHz		
	• Sensitivity			0.25 μV typ. at 12 dB SINAD		–4 dBμV (EMF) typ. at 20 dB SINAD
	• Squelch sensitivity (at threshold)			0.25 μV typ.		
	• Adjacent channel selectivity		Wide	More than 80 dB (85 dB typ.)		
			Middle	–		More than 78 dB (83 dB typ.)
			Narrow	More than 70 dB (75 dB typ.)		
	• Spurious response			More than 85 dB (90 dB typ.)		
	• Intermodulation			More than 75 dB (77 dB typ.)		More than 65 dB (70 dB typ.)
	• Hum and noise (without CCITT filter)		Wide	More than 45 dB (50 dB typ.)		–
			Narrow	More than 40 dB (45 dB typ.)		–
	• Audio output power			4 W typ. at 10% distortion with a 4 Ω load		
	• Audio output impedance			4 Ω		

Measurements made in accordance with EIA-152-C/204D, TIA-603 ([USA], [EXP]) or EN 300 086 ([EUR]).

All stated specifications are subject to change without notice or obligation.

• FRONT UNIT

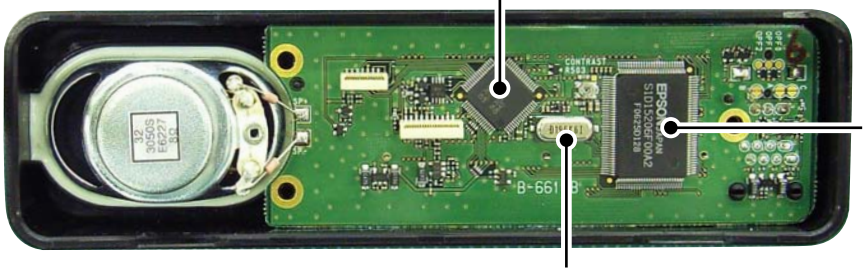

• MAIN UNIT

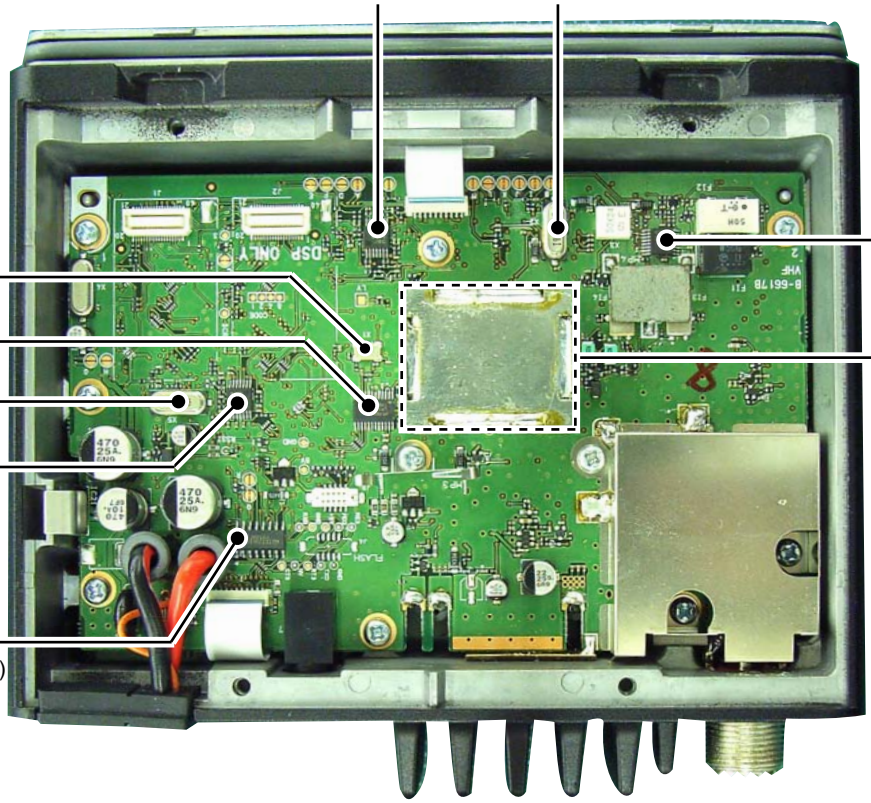

SECTION 3 DISASSEMBLY INSTRUCTION

1. Removing the front panel

① Turn the transceiver's power OFF, then disconnect the DC power cable

② Unscrew the 4 bottom screws, then remove the bottom cover from the transceiver in the direction of the arrow.

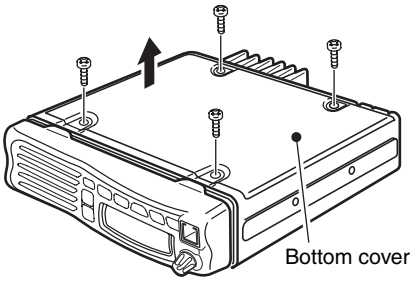

③ Remove the front panel from the main body using a standard cabinet screw driver as shown below.

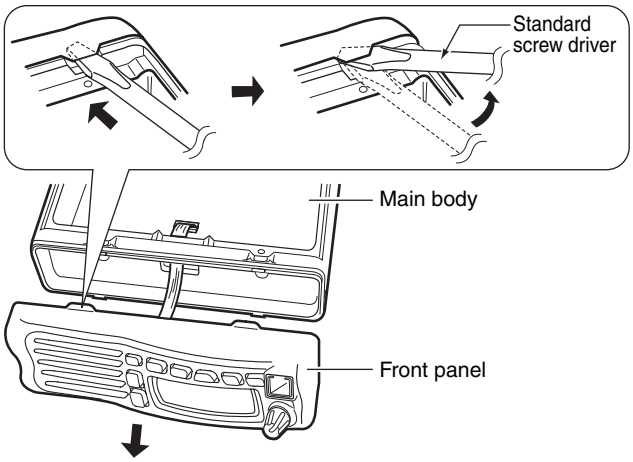

④ Disconnect the flat cable from the front panel.

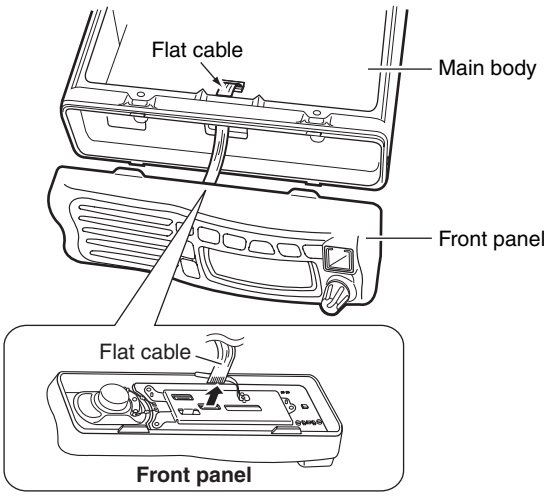

2. Removing the MAIN UNIT

① Unscrew 7 screws Ⓐ, and unsolder 3 points Ⓑ.

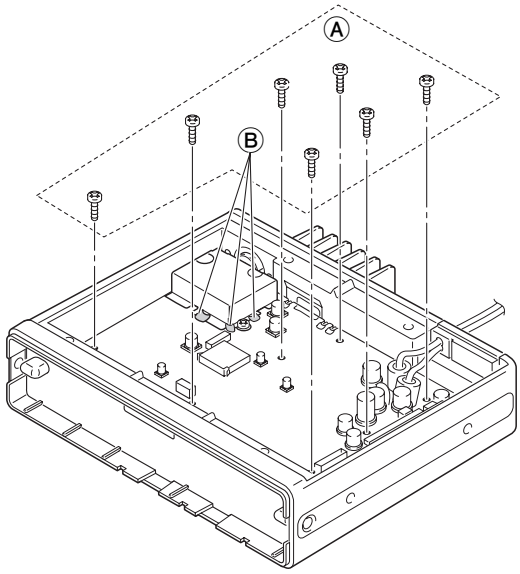

② Unscrew 3 screws Ⓒ and remove the shield cover.

③ Unsolder 3 points Ⓓ (at the antenna connector) and 5 points Ⓔ (at the PA module).

④ Remove the clip.

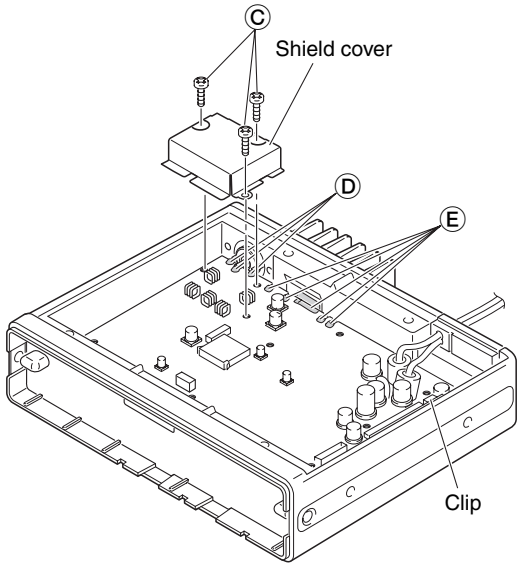

⑤ Remove the bush, and remove the MAIN UNIT in the direction of the arrow.

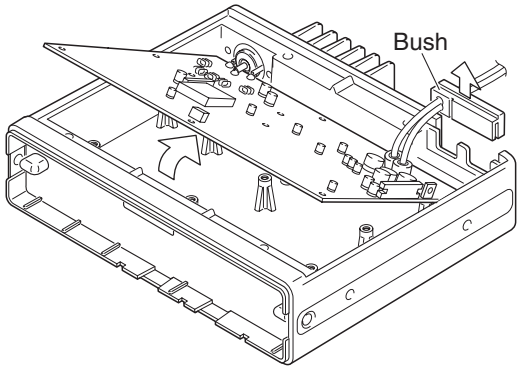

SECTION 4 OPTIONAL UNITS INSTALLATION

BEFORE INSTALLING OPTIONAL UNITS

A sponge with an adhesive strip has been added to optional units (UT-96R, UT-108R, UT-109R, UT-110R, UT-119R, UT-119H, UT-124, UT-124R).
Remove the bottom protective papar, and attach the sponge to the specified position on the optional units as below.

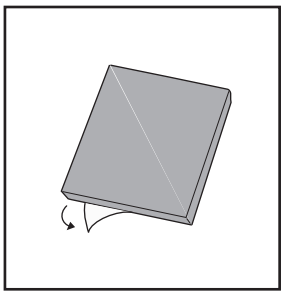

• UT-96R

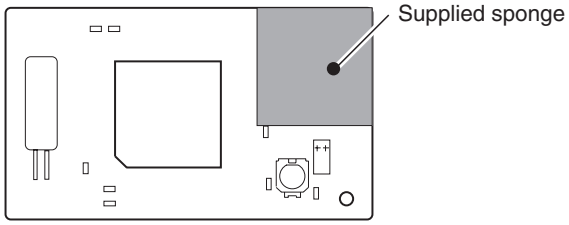

• UT-108R/UT-124/UT-124R

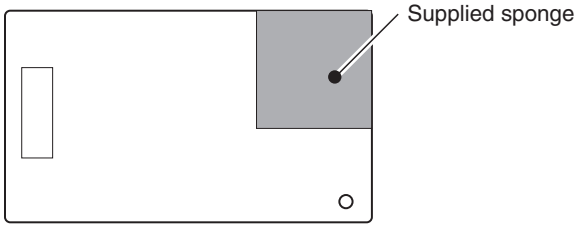

• UT-109R/UT-110R

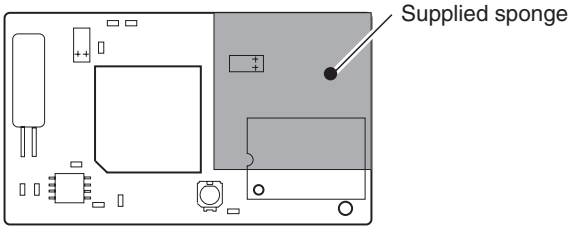

• UT-119R

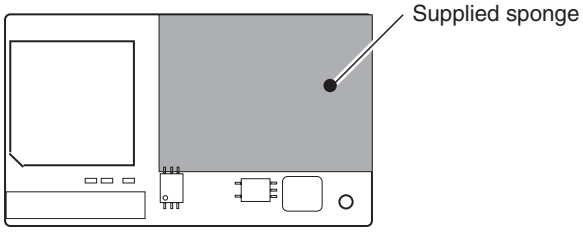

Optional UT-96R or UT-119H installation

Install the optional UT-96R or UT-119H unit as follows:

① Turn the power OFF, then disconnect the DC power cable.
② Unscrew the 4 cover screws, then remove the bottom cover.
③ Install the UT-96R to J1 and the UT-119H to J2 as shown in the diagram below.
④ Remove the protective paper from the supplied sponge, then attach it on the installed unit.
⑤ Replace the bottom cover and screws, then re-connect the DC power cable.

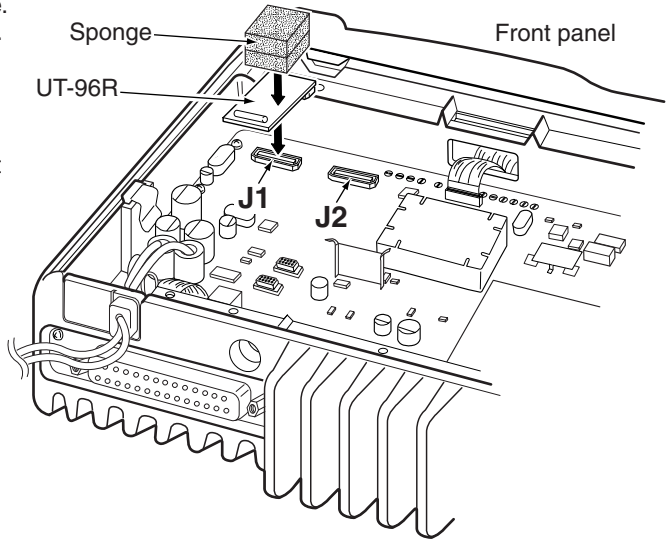

*This illustration describes the UT-96R installation.

Optional UT-109R or UT-110R installation

① Turn the power OFF, then disconne ct the DC power cable.
② Unscrew the 4 cover screws, then remove the bottom cover.
③ Cut the pattern on the PCB at the A (MIC) and B (AF OUT) as shown below.
④ Install the scrambler unit to J1 as described in the installation of optional UT-96R installation as above.
⑤ Remove the protective paper from the supplied sponge, then attach it on the installed unit.
⑥ Replace the bottom cover and screws.

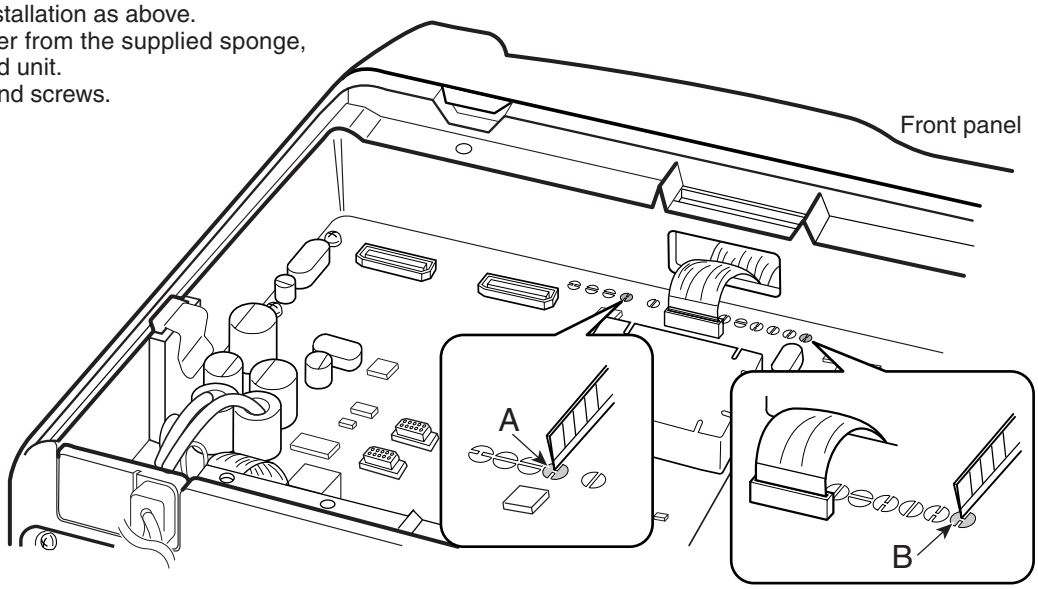

NOTE: When uninstalling the unit
Be sure to re-solder the disconnected points as below when you remove the unit. Otherwise no TX modulation or AF output is available.

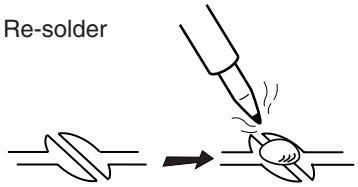

5-1 RECEIVER CIRCUITS

RF CIRCUITS

The antenna switching circuit toggles between the receive (RX) line and transmit (TX) line. RF amplifier amplifies the received signals within the frequency coverage.

Received signals from the antenna are passed through Low Pass filter (LPF; L40, C369, C370), TX power detector (D47, D49, D51) and another LPF (L38, L39, C343, C345, C356, C357), then applied to the antenna switching circuit (D38/D39, L37, C337, C346).

The received signals are passed through the antenna switching circuit as an LPF (L37, C337, C346), LPF (L35, C322, C322, C323, C336) and two-staged tuned Bandpass Filter (BPF; D34, L32, C299, C300 and D31, L31, C278, C279), then applied to the RF amplifier (Q31).

The amplified signals are passed through another two-staged tuned BPF (D27, L28, C260–C263, C242 and D26, L26, C219, C220, C240) and applied to the 1st mixer (IC10; pins 4, 5, L18, L19, L24).

1ST IF CIRCUITS

The amplified received signals from the RF circuit are converted into the 1st IF signal, filtered and amplified at the 1st IF circuits.

The received signals from the RF circuits are mixed with 1st Local Oscillator (LO) signal from the RX VCOs, to be converted into the 1st IF signal. The converted 1st IF signal is amplified by 1st IF amplifier (Q50). The amplified 1st IF signal is passed through the 1st IF filter (FI3 for analog mode, FI4 for digital mode) via filter switches (Q20, D21, D66, D67 on input side; D6, D68, D69 on output side) to suppress unwanted signals. The filtered 1st IF signal is amplified by another 1st IF amplifier (Q12), then applied to the 2nd IF circuits.

2ND IF CIRCUITS

The 1st IF signal is converted into the 2nd IF signal, amplified and demodulated in the IF IC.

The 1st IF signal from the 1st IF amplifier (Q12) is applied to the IF IC (IC5, pin 16). The applied signal is converted into the 2nd IF signal by being mixed with the 2nd LO signal from X1 via tripler (Q3, L3, L2, C32–C35).

The converted 2nd IF signal is output from pin 3, and passed through the 2nd IF filter (FI1). The filtered 2nd IF signal is passed through (bypassed) another 2nd IF filter (FI2) via filter switches (D1 on input side; D2 on output side). The filtered signal is then applied to the IF IC (IC5, pin 5), and amplified by 2nd IF amplifier. The amplified signal is FM-demodulated by quadrature detector (IC5, pins 10, 11; X3).

The demodulated AF signals are output from pin 9, then applied to the AF circuits.

AF CIRCUITS

The demodulated AF signals from the IF IC are amplified and filtered at AF circuits.

This transceiver employs the base band IC for audio signal processing for both transmit and receive. The base band IC is an audio processor and composed of pre-amplifier, compressor, expander, scrambler, etc. in its package.

The demodulated AF signals from IF IC (IC5, pin 9) are passed through Digital/Analog switch (IC8, pins 2, 15), and applied to the base band IC (IC2, pin 23).

The applied AF signals are amplified at the amplifier section and level adjusted at the volume controller section, then suppressed unwanted 3 kHz and higher audio signals at LPF. The filtered AF signals are applied (bypassed) the TX/RX HPF, scrambler, de-emphasis sections in sequence.

The TX/RX HPF filters out 250 Hz and lower audio signals, and the de-emphasis circuit obtains –6 dB/oct of audio characteristics. The expander expands the compressed audio signals and also noise reduction function is provided.

The AF signals are then level adjusted at the volume controller section and amplified at the amplifier section, then output from pin 20 (IC2).

• 2nd IF AND DEMODULATOR CIRCUITS

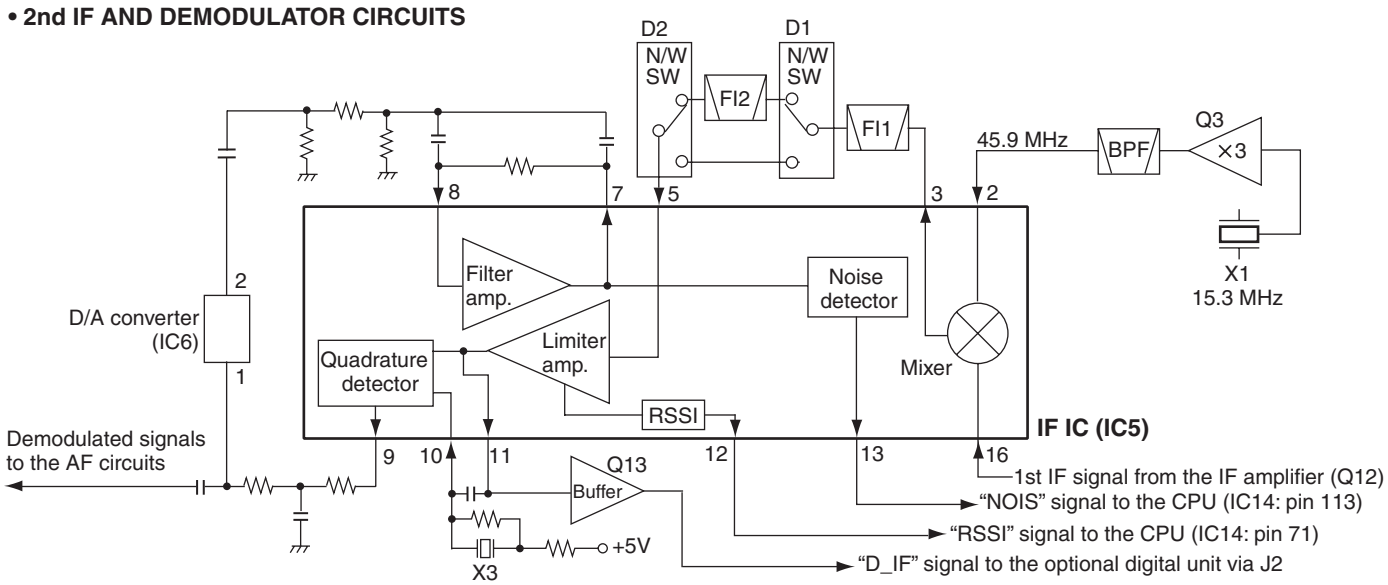

The processed AF signals from the base band IC (IC2) are passed through the AF mute switch (IC8, pins 3, 4) and D/A converter (IC6, pins 15, 16) for level adjustment. The level adjusted AF signals are amplified by AF amplifier (IC22).

The amplified AF signals are then;

- Output from D-sub 25 pin connector (CONNECT UNIT; J602).
  or
- Buffer-amplified by Q49, then applied to connected microphone via FRONT UNIT.
  or
- Applied to the AF power amplifier (IC21, pin 1) to obtain AF output power level, then applied to the internal/external speaker via external speaker jack (J7).

SQUELCH CIRCUITS
<NOISE SQUELCH>
The squelch mutes the AF output signals when no RF signals are received. By detecting noise components (30 kHz and higher signals) in the demodulated AF signals, the squelch circuit toggles the AF power amplifier ON and OFF.

A portion of the demodulated AF signals from the IF IC (IC5, pin 9) are applied to the D/A converter (IC6, pin 1) for level adjustment (squelch threshold adjustment). The level-adjusted AF signals are output from pin 2 and passed through the noise filter (IC5, pins 7, 8, R121–R124, C216 –C218). The filtered noise signals are amplified the noise components only.

The amplified noise components are converted into the pulse-type signal at the noise detector section, and output from pin 13 as the "NOIS" signal. The "NOIS" signal is applied to the CPU (IC14, pin 113), Then the CPU outputs signal "AFON2" signal from pin 15 to the AF power amplifier controller (Q51, Q52, D65), according to the "NOIS" signal level. The AF power amplifier controller toggles AF power amplifier (IC21) ON and OFF according to the "AFON" signal.

<TONE SQUELCH>
The tone squelch circuit detects tone signals and opens the squelch only when receiving a signal containing a matched sub audible tone. When the tone squelch is in use, and a signal with a mismatched or no sub audible tone is received, the tone squelch circuit mutes the AF signals even when the noise squelch is open.

• CTCSS/DTCS
A portion of the demodulated AF signals are passed through the active LPF (Q4, R45, R46, R47, R63, R64, C45, C46, C47, C71) to filters CTCSS/DTCS signal. The filtered signal is applied to the CPU (IC14, pin 64). The CPU compares the applied signal and the set CTCSS/DTCS, then outputs control signal as same as "NOISE SQUELCH."

• 2/5 TONE AND DTMF
2/5 tone signals in the demodulated AF signals are passed through the LPF in the base band IC (IC2) and output from pin 21, then applied to the CPU (IC14, pin 63) via tone amplifer (IC1, pins 8, 9), and decoded.

5-2 TRANSMITTER CIRCUITS

MICROPHONE AMPLIFIER CIRCUITS
The AF signals from the microphone (MIC signals) are filtered and level-adjusted at the microphone amplifier circuits.

AF signals from the connected microphone (MIC signals) are passed through (bypassed) the ALC (Automatic Level Control) amplifier (FRONT UNIT; IC505, pins 3, 5) via AF switch (FRONT UNIT; IC507, pins 1, 6/7), then applied to the microphone amplifier (FRONT UNIT; IC508, pin 3). The amplified MIC signals are output from pin 4, and applied to the MAIN UNIT.

The MIC signals from the FRONT UNIT are passed through the Int./Ext. MIC switch (IC23, pins 1, 6), and applied to the base band IC (IC2, pin 3) and processed.

The applied MIC signals are amplified at the amplifier (TXA1), and level adjusted at the volume controller (VR1). The level adjusted MIC signals are applied (bypassed) the compressor section, pre-emphasis section, TX/RX HPF, de-scrambler, limiter, splatter, in sequence, then applied to another volume controller.

The compressor compresses the MIC signals to provide high S/N ratio for receive side, and the pre-emphasis obtains +6 dB/oct audio characteristics. The TX/RX HPF filters out 250 Hz and lower audio signals, the limiter limits its level and the splatter filters out 3 kHz and higher audio signals. The filtered MIC signals are level adjusted at another volume controller (VR2), and then output from pin 7 via smoothing filter (SMF).

The MIC signals from the base band IC are passed through the digital/analog switch (IC8, pins 12, 14), FM/PM switch (IC3, pins 13, 14), and applied to the AF mixer (IC1, pin 13) where the MIC signals and tone signals are mixed with. The mixed MIC signals are passed through D/A converter (IC6, pins 3, 4) for level adjustment. The level adjusted MIC signals are then applied to the VCO as modulation signals.

MODULATION CIRCUITS
The modulation circuits modulates the VCO oscillating signal using the modulation signals.

The MIC signals from the microphone amplifier circuits are applied to the D20 of TX VCO (Q19, D14, D17, D18, D20) as the modulation signals, and modulate the VCO oscillating signal by changing the reactance of D20.

The FM-modulated VCO output is amplified by buffer-amplifiers (Q22, Q29), then applied to the power amplifiers via D24 as the TX signal.

SIGNALING ENCODE
5/2-TONE, DTMF and CTCSS/DTCS signals are output from the CPU (IC14) and passed through the LPF (IC7) and level converter (IC6), then applied to the AF mixer (IC1, pin 13) and mixed with MIC signals. The mixed tone signals are passed through the D/A converter (IC6, pins 3, 4) for level adjustment. The level adjusted tone signals are applied to the both of TX VCO (Q19, D14, D17, D18, D20) and reference frequency oscillator (X1, pin 1) via the level adjuster (IC1, pins 1, 3).

• BASE BAND IC BLOCK DIAGRAM

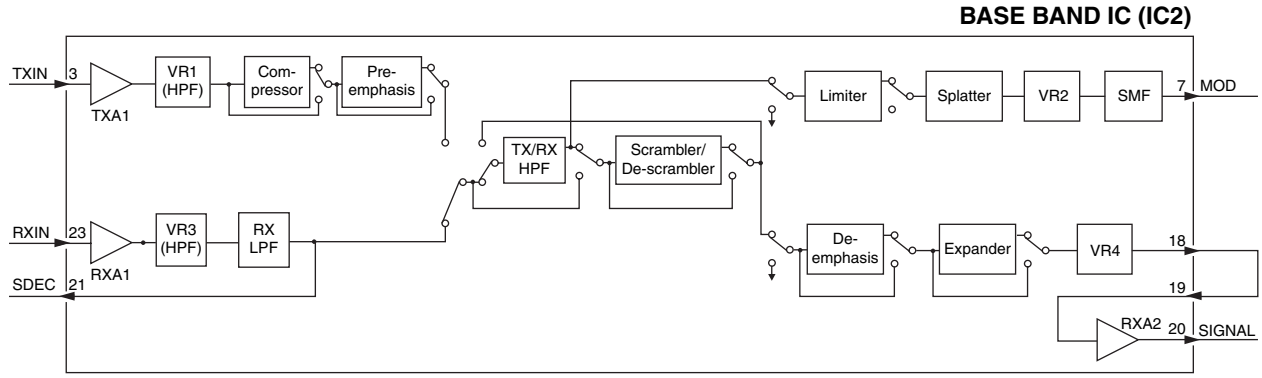

TX POWER AMPLIFIERS
The transmit signal from the TX VCO is amplified to the transmit output level by the transmit amplifiers.

The TX VCO output signal from buffer amplifier (Q29) is applied to the YGR amplifier (Q30) via the TX/RX switch (D24). The amplified TX signal is passed through the LPF (L29, L30, C269–C271, C290), and applied to the RF power module (IC15, pin 1) and power-amplified to obtain 50 W/25 W (max.) of TX output power.

The power-amplified TX signal is passed through the LPF as a harmonic filter (L33, C305–C308), the antenna switching circuit (D38, D39) and LPF (L38, L39, C343, C345, C356, C357).

The TX signal is also gone through the power detector (D47, D49, D51) and LPF (L40, C369, C370) before being applied to the antenna connector.

APC CIRCUIT
The APC (Automatic Power Control) circuit prevents the transition of the transmit output power level which is caused by load mismatching or heat effect, etc. At the power detector, a portion of the transmit signal is rectified to produce DC voltage which is in proportion of the transmit power level.

The rectified voltage is applied to the inverted input terminal of the operational amplifier (IC17, pin 3). The TX power setting voltage "T2" from the D/A converter (IC12, pin 2) is applied to the non-inverted input terminal as the reference.

The operational amplifier compares the rectified voltage and reference voltage "T2," and the difference of the voltage is output from the operational amplifier pin 4, and the output voltage controls the bias of YGR (Q30) amplifier and power module (IC15) for stable transmit output power.

• APC CIRCUIT

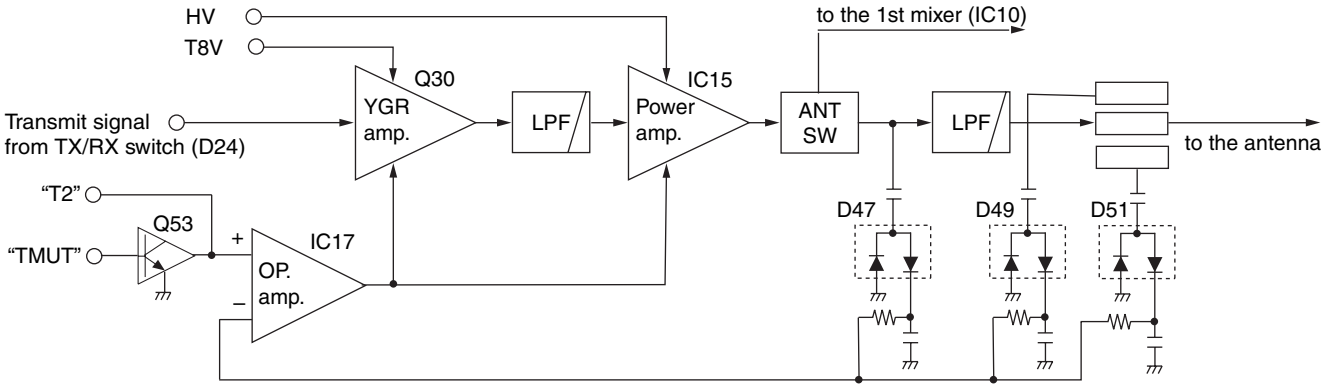

5-3 FREQUENCY SYNTHESIZER CIRCUITS

VCO
VCO is a oscillator whose oscillating frequency is controlled by adding voltage (lock voltage).

• RX VCO1 (Q18, D10, D13)
RX VCO1 generates the 1st LO signal for receiving 155–174 MHz signals.

• RX VCO2 (Q17, D8, D9)
RX VCO2 generates the 1st LO signal for receiving 136–155 MHz signals.

Each output signals are amplified by the buffer amplifiers (Q22, Q29), and applied to the 1st mixer (IC10, pins 4, 5) via TX/RX switch (D25 is ON, D24 is OFF) and LPF (L22, L23, C215, C216, C236, C237), to be mixed with the received signals to produce the 46.35 MHz 1st IF signal.

• TX VCO (Q19, D14, D17, D18, D20)
The output signal is applied to the transmit amplifiers via the buffer amplifiers (Q22, Q29) and TX/RX switch (D24 is ON, D25 is OFF).

A portion of the buffer-amplified VCO output signals from the buffer amplifier (Q22) are applied to the PLL IC (IC4, pin 6) via doubler (Q25) and BPF (Q5, D4, D5, L4, R77, C84–C90).

• PLL CIRCUITS

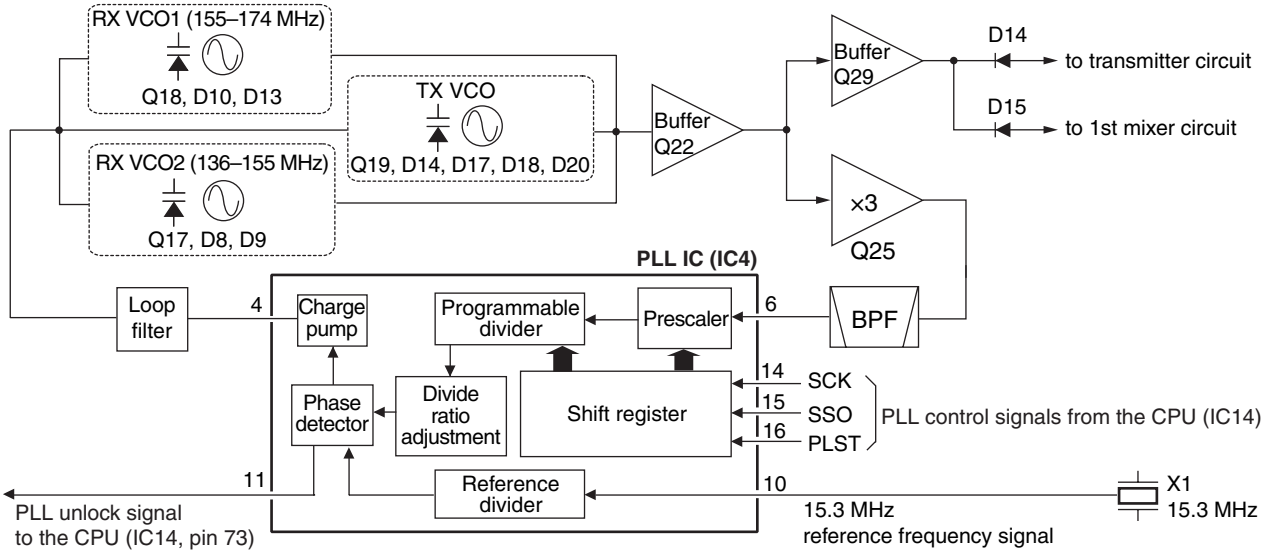

PLL IC

The PLL circuit provides stable oscillation of the transmit frequency and receive 1st LO frequency. The PLL output frequency is controlled by the divided ratio (N-data) from the CPU.

The applied signals are divided at the prescaler and programmable counter according to the control signals (“SSO,” “PLST” and "SCK”) from the CPU. The divided signal is phase-compared with the reference frequency signal from the reference frequency oscillator (X1, pin 3), at the phase detector.

The phase difference is output from pin 4 as a pulse type signal after being passed through the internal charge pump. The output signal is converted into the DC voltage (lock voltage) by passing through the loop filter (Q8, Q9). The lock voltage is applied to the variable capacitors (D10 and D13 of RX VCO1, D8 and D9 of RX VCO2, D14 and D17 of TX VCO), and locked to keep the VCO frequency constant.

If the oscillated signal drifts, its phase changes from that of the reference frequency, causing a lock voltage change to compensate for the drift in the VCO oscillating frequency.

5-4 POWER SUPPLY CIRCUITS (MAIN UNIT)

Voltage from the attached battery pack is routed to whole of the circuit in the transceiver via switches and regulators.

• POWER SUPPLY CIRCUITS

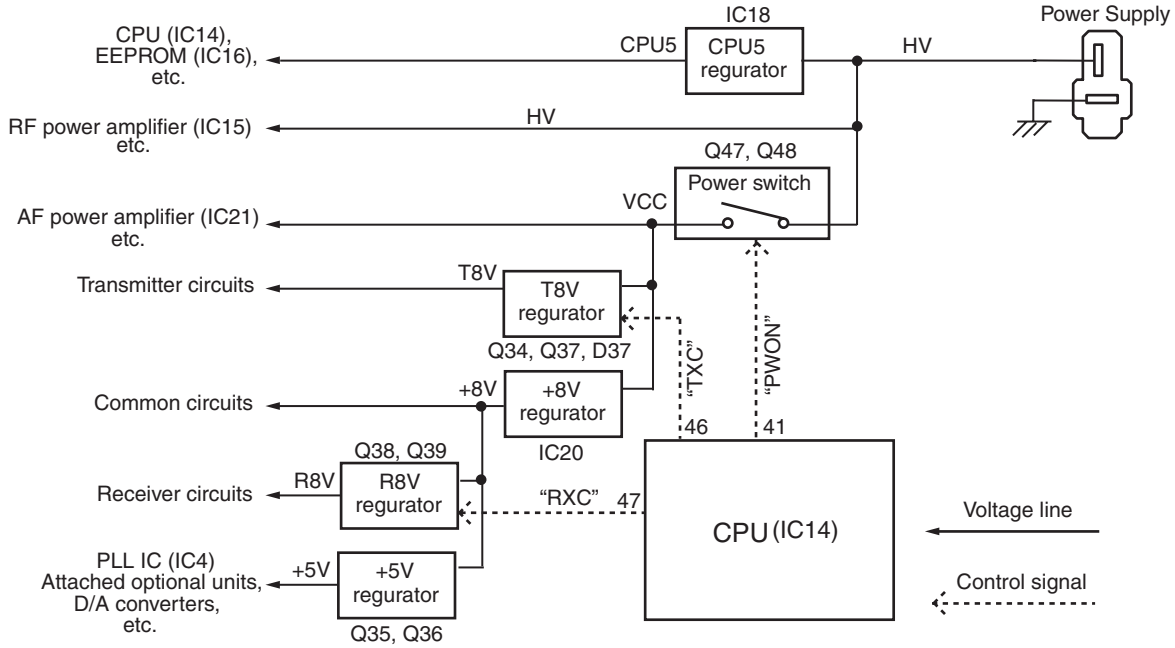

5-5 PORT ALLOCATIONS

• CPU (MAIN UNIT; IC14)

Pin No.	Port Name	Description
1	DSDA	Outputs serial data to the D/A converter (IC20, pin 6).
2	DAST	Outputs strobe signal to the D/A converter (IC4, pin 6).
3	SIDE3	Input port for [Side3] key (S4). "Low"=When the key is pushed.
4–7	CBI0–3	Input ports for [ROTARY SELECTOR] (S701).
10	SSO	Outputs serial data to the PLL IC (IC1, pin 15), D/A converter (IC4, pin 8).
11	SCK	Outputs serial crock signal to the PLL IC (IC1, pin 14), D/A converter (IC4, pin 8).
13	PLST	Outputs PLL strobe signal to the PLL IC (RF UNIT; IC1, pin 16).
15	DASW	Outputs mode (Digital/Analog) switching signal to the D/A converter (IC14, pins 10, 11).
17	TMUT	Outputs transmit mute signal to the transmit mute switch (RF UNIT; Q606).
18	NWC2	Outputs Narrow/Wide mode switching signal to the bandwidth switches (Q26, D32, D33).
19	NWC1	Outputs Narrow/Wide mode switching signal to the bandwidth switches (Q27, Q41, Q42, D34, D35).
20	DDSD	Outputs serial data to the DTMF decode IC (IC10, pin 9).
21	DDAC	Outputs serial clock signal to the DTMF decode IC (IC10, pin 11).
26	T5C	Outputs T5V line control signal to the T5V regulator (Q15). "Low"= While transmitting.
27	R5C	Output R5V line control signal to the R5V regulator (Q16). "Low"= While receiving.
28	S5C	Output S5V line control signal to the S5V regulator (Q14). "Low"=While power save mode.
29	PTTSW	Input port for [PTT] switch (S3). "Low"=When the switch is pushed.
30	SIDE2	Input port for [Side2] key (S5). "Low"=When the key is pushed.
32	RMUT	Outputs mute signal to the AF mute switch (D42).
37	NOIS	Input port for the noise level from the IF IC (IC3, pin 13).
38	POSW	Input port for power switch (R702) from power controller (D36).
39	DDST	Outputs strobe signal to the DTMF decode IC (MAIN UNIT; IC10, pin 14).
40	MTCK	Outputs serial clock signal to the base band IC (MAIN UNIT; IC5, pin 9).
41	PWON	Outputs VCC line control signal to the power switch (Q30, Q31). "Low"=While the power is ON.
43	SENC	Outputs single tone encode signal to the LPF (IC17, pin 10).
44	BEEP	Outputs beep sound to the AF circuits (IC4, pin 13).
45	SDEC	Input port for decoded 2/5 tone and DTMF signals.
46	CDEC	Input port for decoded CTCSS/DTCS signal.
47	ISENS	Input port for power amplifier current detect signal from the current detector (RF UNIT; Q604, Q605).
48	BATV	Input port for remaining battery power.
49	LVIN	Input port for VCO lock voltage.
50	RSSI	Input port for RSSI signal from the IF IC (IC3, pin 12).
55	EMER	Input port for [Emer] switch (S702).
70	CSFT	Outputs CPU clock frequency shift signal to the CPU clock oscillator (X2, D38).
71	DUSE	Outputs CTCSS/DTCS select signal to the CTCSS/DTCS switch (Q34).
73	UNLK	Input port for PLL unlock detect signal from the PLL IC (IC1, pin 11).
74	RLED	Outputs RX indicator (DS701) control signal to the LED driver (Q701).
75	TLED	Outputs TX indicator (DS701) control signal to the LED driver (Q701).
78	FSDA	Outputs serial data to the expand IC (FRONT UNIT; IC505, pin 3).
79	FSCL	Outputs serial clock signal to the expand IC (FRONT UNIT; IC505, pin 3).
81	CIRQ	Input port for external connection detect signal from J1 and J2.
88	SIDE1	Input port for [Side1] key (S6). "Low"=When the key is pushed.
89–91	CENC0–2	Output CTCSS/DTCS signals to the LPF (IC17, pin 3).
92	EMPH	Outputs emphasis characteristic change signal to the D/A converter (IC13, pins 9, 10).
93	MTDT	Outputs serial data to the base band IC (IC5, pin 10).
96	MSCK	Outputs serial clock signal to the base band IC (MAIN UNIT; IC5, pin 13).
97	PMFM	Outputs modulation mode switching signal to the PM/FM switch (IC13, pin 11) .
98	ESDA	Outputs serial data to the EEPROM (IC19, pin 5).
99	ESCL	Outputs serial clock signal to the EEPROM (IC19, pin 6).
100	RESL	Input port for reset signal from the reset IC (IC8, pin 1).

• D/A CONVERTER (MAIN UNIT; IC6)

Pin No.	Port Name	Description
1	T1	Outputs BPF tuning voltage to the tunable BPF (D23, D24, L31, L32, C120–C122, C125–C127).
2	T2	**• While receiving** Outputs BPF tuning voltage to the tunable BPF (D28, D29, L33, L34, C140–C144, C147). **• While transmitting** Outputs TX power setting voltage to the APC amplifier (RF UNIT; IC601).
3	TXLVA	Outputs oscillation frequency adjust voltage to the TX VCO (Q3, D10–D12).
4	RXLVA	Outputs oscillation frequency adjust voltage to the RX VCO1/2 (Q1, D1–D4/Q2, D5–D8).

SECTION 6 ADJUSTMENT PROCEDURES

6-1 PREPARATION

When adjusting IC-F5060 series transceiver, CS-F5060 CLONING SOFTWARE, CS-F5060 ADJ ADJUSTMENT SOFTWARE (Rev. 1.0 or later), RS-232C cable, JIG cable (modified OPC-1122/U CLONING CABLE; see the page 6-2) and the following test equipments are required.

EQUIPMENT	GRADE AND RANGE	EQUIPMENT	GRADE AND RANGE
DC power supply	Output voltage : 13.6 V DC [USA] 13.2 V DC [EUR], [EXP] Current capacity : More than 1.5 A	Attenuator	Power attenuation : 50 or 60 dB Capacity : 60 W [USA] 30 W [EUR], [EXP]
modulation analyzer	Frequency range : DC–300 MHz Measuring range : 0 to ±10 kHz	External speaker	Input impedance : 4 Ω Capacity : 5 W or more
Frequency counter	Frequency range : 0.1–300 MHz Frequency accuracy : ±1 ppm or better Sensitivity : 100 mV or better	Standard signal generator (SSG)	Frequency range : 0.1–300 MHz Output level : 0.1 µV to 32 mV (–127 to –17 dBm)
RF power meter	Measuring range : 0.1–60 W [USA] 0.1–30 W [EUR], [EXP] Frequency range : 100–300 MHz Impedance : 50 Ω SWR : Better than 1.2 : 1	Oscilloscope	Frequency rang : DC–20 MHz Measuring range : 0.01–20 V
		Digital voltmeter	Input impedance : 50 kΩ Measuring range : 0.1–10V

■ SYSTEM REQUIREMENTS (for the ADJUSTMENT SOFTWARE)

• Microsoft® Windows® 98/98SE/Me/2000/XP • RS-232C serial port (D-sub 9 pin)

■ ADJUSTMENT SOFTWARE INSTALLATION

① Quit all applications when Windows is running.
② Insert the CD into the appropriate CD drive.
③ Double-click the “Setup.exe” contained in the ‘CS-F5060 ADJ’ folder in the CD drive.
④ The “Welcome to the InstallShield Wizard for CS-F5060 ADJ” will appear. Click [Next>].
⑤ The “Choose Destination Location” will appear. Then click [Next>] to install the software to the destination folder. (e.g. C:\Program Files\Icom\CS-F5060 ADJ)
⑥ After the installation is completed, the “InstallShield Wizard Complete” will appear. Then click [Finish].
⑦ Eject the CD.
⑧ Program group ‘CS-F5060 ADJ’ appears in the ‘Programs’ folder of the start menu, and ‘CS-F5060 ADJ’ icon appears on the desk top screen.

■ STARTING SOFTWARE ADJUSTMENT

① Connect the transceiver and PC with RS-232C cable and JIG CABLE.
② Turn the transceiver power ON.
③ Boot up Windows, and click the program group ‘CS-F5060 ADJ’ in the ‘Programs’ folder of the [Start] menu, then CS-F5060 ADJ’s window appears.
④ Click ‘Connect’ on the CS-F5060 ADJ’s window, then the window shows transceiver’s condition and adjustment items as below.
⑤ Set or modify adjustment data as specified.

Microsoft and Windows are registered trademarks of Microsoft Corporation in the U.S.A. and other countries.

■ BEFORE STARTING SOFTWARE ADJUSTMENT

Clone the adjustment frequencies and settings into the transceiver, and set the configuration using the CS-F5060 CLONING SOFTWARE before starting the software adjustment. Otherwise, the software adjustment can not be started.

CAUTION!: BACK UP the originally programmed memory data in the transceiver before programming the adjustment frequencies. When program the adjustment frequencies into the transceiver, the transceiver’s memory data will be overwritten and lose original memory data at the same time.

• ADJUSTMENT FREQUENCY LIST

CH	FREQUENCY	SETTING	CH	FREQUENCY	SETTING
1	154.900 MHz	• TX power : Low1 • Mode : Narrow	10	174.000 MHz	• TX power : Low1 • Mode : Narrow
2	174.000 MHz	• TX power : Low1 • Mode : Wide	11*	155.000 MHz	• TX power : Low1 • Mode : Middle
3	136.000 MHz	• TX power : Low1 • Mode : Wide	12*	136.000 MHz	• TX power : High • Mode : Middle
4	155.000 MHz	• TX power : Low1 • Mode : Wide	13*	174.000 MHz	• TX power : Low2 • Mode : Middle
5	136.000 MHz	• TX power : High • Mode : Narrow	14	155.000 MHz	• TX power : Low1 • Mode : Digital
6	136.000 MHz	• TX power : Low2 • Mode : Wide	15	136.000 MHz	• TX power : Low1 • Mode : Digital
7	155.000 MHz	• TX power : Low1 • Mode : Middle • DTCS : 007	16	174.000 MHz	• TX power : Low1 • Mode : Digital
8	155.000 MHz	• TX power : Low1 • Mode : Narrow	17	136.000 MHz	• TX power : Low1 • CTCSS : 151.4 Hz
9	136.000 MHz	• TX power : Low1 • Mode : Narrow	18	136.000 MHz	• TX power : Low1 • Mode : Wide • DTMF : P3

*; [EUR] only

• **CONNECTION**

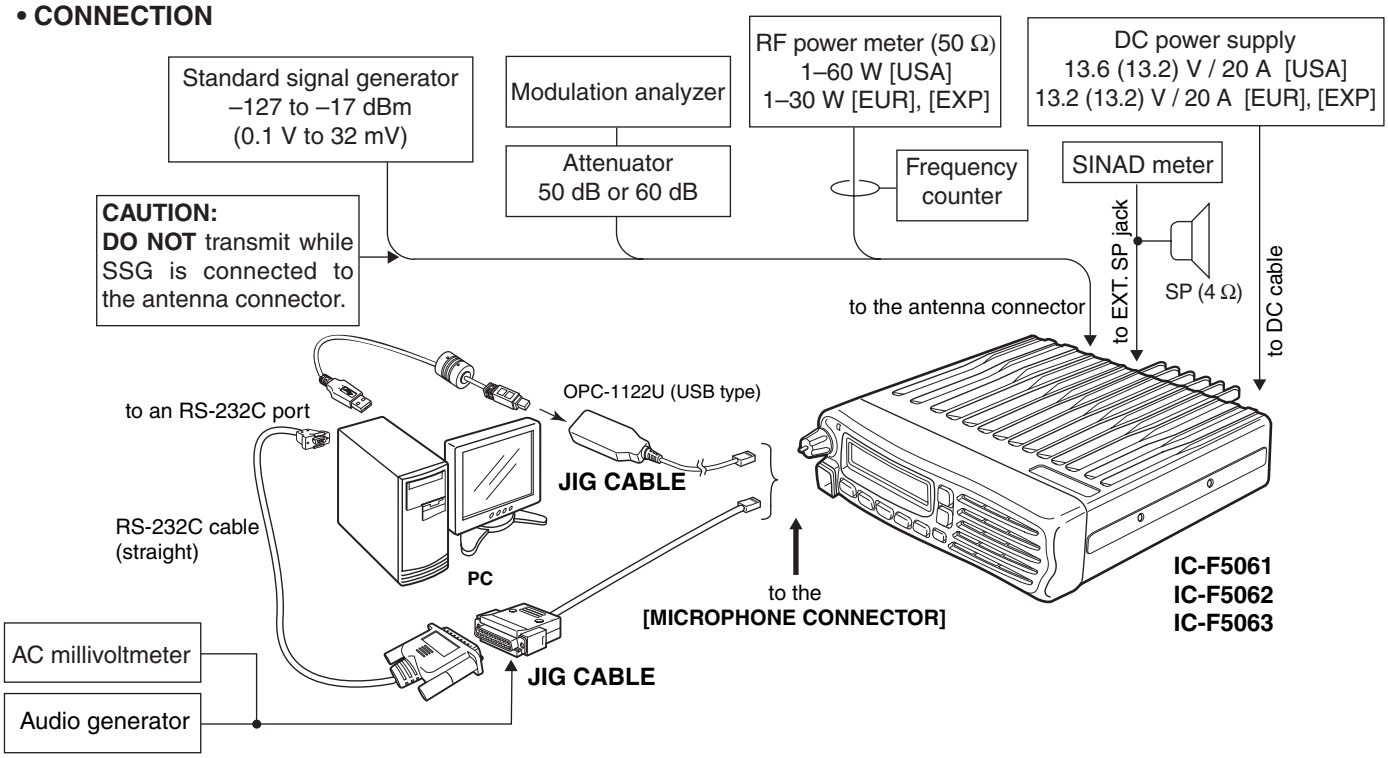

• **JIG CABLE**

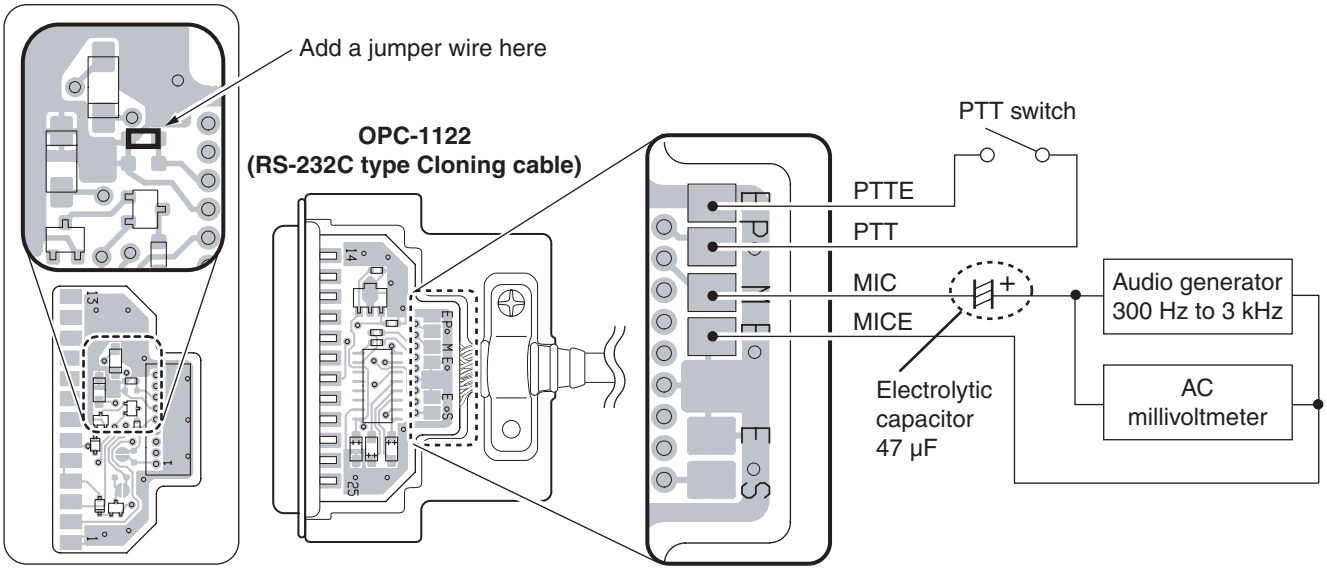

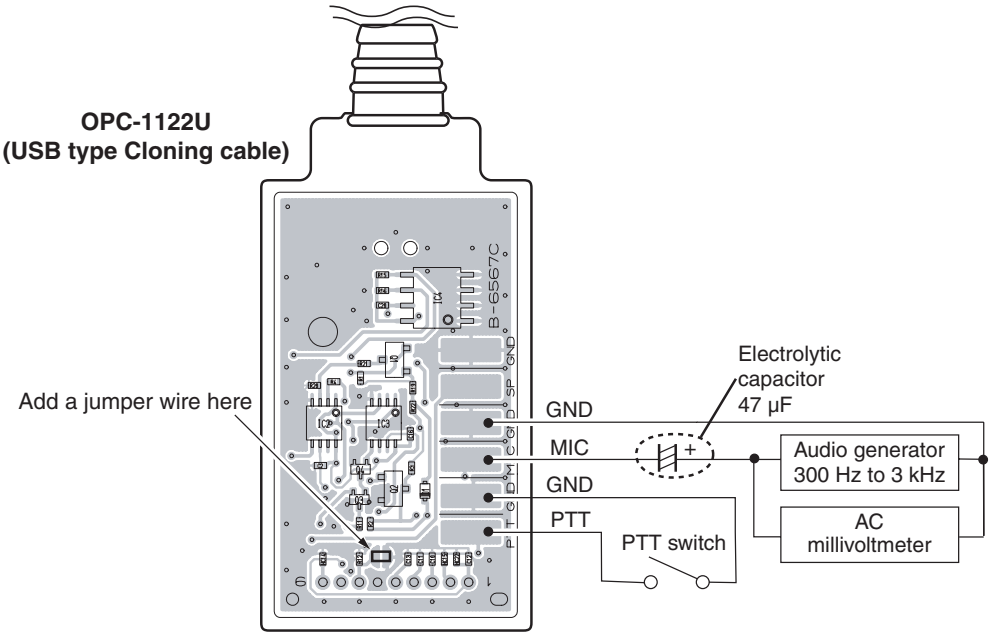

• **ADJUSTMENT SOFTWARE WINDOW**

CS-F5060 ADJ

File View COM Port Clone Help

Mobile LMR
- Adjust
- Parameter

Adjust Utility

Setting			
CH No.	1	RX=0.00000, TX=0.00000	
		RF Power=High, Mode=Wide	
		CH Type=Analog	
Adjust			
Power (Hi)	0	[————]	
Power (L2)	0	[————]	
Power (L1)	0	[————]	
BAL (Wide)	0	[————]	
BAL (Mid)	0	[————]	
BAL (Narrow)	0	[————]	
BAL (Digital)	0	[————]	
MOD (Wide)	0	[————]	
MOD (Mid)	0	[————]	
MOD (Narrow)	0	[————]	
MOD (Digital)	0	[————]	
CTCSS/DTCS	0	[————]	
SQL	0	[————]	
REF	0	[————]	
BPF C ALL			[Enter] to Sweep
BPF T1 C	0	[————]	[Enter] to Sweep
BPF T2 C	0	[————]	[Enter] to Sweep
BPF L ALL			[Enter] to Sweep
BPF T1 L	0	[————]	[Enter] to Sweep
BPF T2 L	0	[————]	[Enter] to Sweep
BPF H ALL			[Enter] to Sweep
BPF T1 H	0	[————]	[Enter] to Sweep
BPF T2 H	0	[————]	[Enter] to Sweep
RX LVA1	0	[————]	[Enter] to Sweep
RX LVA2	0	[————]	[Enter] to Sweep
TX LVA	0	[————]	[Enter] to Sweep
LV (RX1)	0	0.00V	
LV (RX2)	0	0.00V	
LV (TX)	0	0.00V	
RSSI	0	[Enter] to Capture	
MOD N C	0	[Enter] to Capture	
MOD N L	0	[Enter] to Capture	
MOD N H	0	[Enter] to Capture	
MOD M C	0	[Enter] to Capture	
MOD M L	0	[Enter] to Capture	
MOD M H	0	[Enter] to Capture	
MOD W C	0	[Enter] to Capture	
MOD W L	0	[Enter] to Capture	
MOD W H	0	[Enter] to Capture	
MOD D C	0	[Enter] to Capture	
MOD D L	0	[Enter] to Capture	
MOD D H	0	[Enter] to Capture	
Digital Mode	1		
S.Tone	0	[————]	

Transmit output power — Power (Hi), Power (L2), Power (L1)

(*) — BAL (Wide), BAL (Mid)

Modulation balance — BAL (Narrow)

(*) — BAL (Digital)

(*) — MOD (Wide), MOD (Mid)

FM deviation — MOD (Narrow)

(*) — MOD (Digital)

CTCSS/DTCS deviation — CTCSS/DTCS

Squelch level — SQL

Reference frequency — REF

RX sensitivity (Auto.) — BPF C ALL

RX sensitivity (Manu.) — BPF T1 C, BPF T2 C

(*) — BPF L ALL, BPF T1 L, BPF T2 L, BPF H ALL, BPF T1 H, BPF T2 H

PLL lock Voltage (Adjustment) — RX LVA1, RX LVA2, TX LVA

PLL lock Voltage (Preset) — LV (RX1), LV (RX2), LV (TX)

S-meter — RSSI

FM deviation (Narrow) — MOD N C, MOD N L, MOD N H

FM deviation (Middle) — MOD M C, MOD M L, MOD M H

FM deviation (Wide) — MOD W C, MOD W L, MOD W H

Digital deviation — MOD D C, MOD D L, MOD D H

Digital mode preset — Digital Mode

2/5tone, DTMF — S.Tone

*; **DO NOT** put the cursor on these items and push the [ENTER] key. Otherwise, some adjustment items will not be adjusted properly.

NOTE: The above screen is an example only. Each transceiver has its own specific values for each setting.

6-2 FREQUENCY ADJUSTMENT

Select an adjustment item using [↑] / [↓] keys, then set to the specified value using [←] / [→] keys on the connected PC's keyboard.

ADJUSTMENT		ADJUSTMENT CONDITION	UNIT	OPERATION	VALUE
PLL LOCK VOLTAGE (adjustment) [RX LVA1]	1	Set the preset value of [LV (RX1)], [LV (RX2)] and [LV (TX)] to "204 [4.00V]" on the adjustment software.			
	2	• Channel : CH 1 • Receiving	PC screen	Click [Reload (F5)] button, then check the "LVIN" item on the CS-F5060 ADJ's screen as below.	4.00 V
[RX LVA2]	3	• Channel : CH 2 • Receiving			
[TX LVA]	4	• Channel : CH 2 • Transmitting			
		CONVENIENT: The "PLL LOCK VOLTAGE" can be adjusted automatically. 1: Set the Lock voltage preset ([LV RX1], [LV RX2], [LV TX]) to "204 (4.00 V)." 2: Put the cursor on [RX LVA1], [RX LVA2] and [TX LVA], then push the [ENTER] key on the connected PC's keyboard.			
PLL LOCK VOLTAGE (verify)	1	• Channel : CH 3 • Receiving	PC screen	Click [Reload (F5)] button, then check the "LVIN" item on the CS-F5060 ADJ's screen.	0.8–1.6 V (Verify)
	2	• Channel : CH 4 • Receiving			
	3	• Channel : CH 3 • Transmitting			
REFERENCE FREQUENCY [REF]	1	• Channel : CH 2 • Connect an RF power meter to the antenna connector. • Transmitting	Top panel	Loosely couple a frequency counter to the antenna connector.	174.000000 MHz

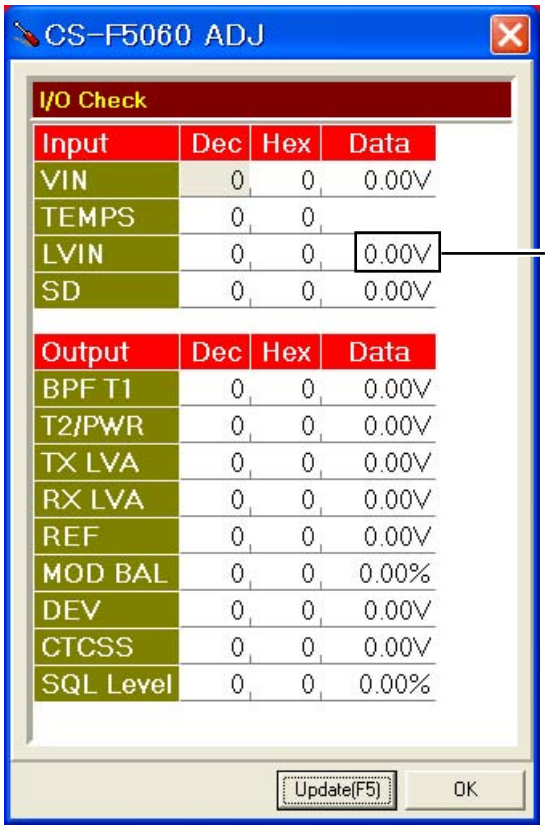

PLL LOCK VOLTAGE will be appeared here

NOTE: The above screen is an example only.
Each item's voltage will appear when pushing [Update] button.

6-3 TRANSMIT ADJUSTMENT

Select an adjustment item using [↑] / [↓] keys, then set to the specified value using [←] / [→] keys on the connected PC's keyboard.

ADJUSTMENT		ADJUSTMENT CONDITION	UNIT	OPERATION	VALUE
OUTPUT POWER [Power (Hi)]	1	• Channel : CH 5 • Transmitting	Rear panel	Connect an RF power meter to the antenna connector.	50 W [USA] 25 W [EUR], [EXP]
[Power (L2)]	2	• Channel : CH 6 • Transmitting			25 W [USA] 10 W [EUR], [EXP]
[Power (L1)]	3	• Channel : CH 3 • Transmitting			5.0 W [USA] 2.5 W [EUR], [EXP]
MODULATION BALANCE [BAL (Narrow)]	1	Set the preset value of [MOD N] to "100" on the adjustment software.			
	2	• Channel : CH 7 • No audio signals applied to the JIG cable. • Set a modulation analyzer as; HPF : OFF LPF : 20 kHz De-emphasis : OFF Detector : (P–P)/2 • Push [P0] while transmitting.	Rear panel	Connect the modulation analyzer with an oscilloscope to the antenna connector through an attenuator.	Set to square wave form Flat
FM DEVIATION (NARROW) [MOD N C]	1	• Connect an audio generator to the JIG cable and set as; Frequency : 1.0 kHz Level : 40 mV rms • Set the modulation analyzer to the same condition as "MODULATION BALANCE." • Transmitting • Channel : CH 8 • Transmitting	Rear panel	Connect the modulation analyzer to the antenna connector through an attenuator.	±2.05 to ±2.15 kHz
[MOD N L]	2	• Channel : CH 9 • Transmitting			
[MOD N H]	3	• Channel : CH 10 • Transmitting			
(WIDE) [MOD W C]	4	• Channel : CH 4 • Transmitting			±4.05 to ±4.15 kHz
[MOD W L]	5	• Channel : CH 3 • Transmitting			
[MOD W H]	6	• Channel : CH 2 • Transmitting			
(MIDDLE)* [MOD W C]	7	• Channel : CH 11 • Transmitting			±3.15 to ±3.25 kHz
[MOD M L]	8	• Channel : CH 12 • Transmitting			
[MOD M H]	9	• Channel : CH 13 • Transmitting			
DIGITAL DAVIATION [MOD D C]	1	Set the preset value of [Digital Mode] to "7" on the adjustment software.			
	2	• Attach the UT-119 to J2. (Refer to page 4-2 for the installation) • Channel : CH 14 • Transmitting	Rear panel	Connect the modulation analyzer to the antenna connector through an attenuator.	±1.41 to ±1.45 kHz
[MOD D L]	3	• Channel : CH 15 • Transmitting			
[MOD D H]	4	• Channel : CH 16 • Transmitting			
CTCSS/DTCS DEVIATION [CTCS/DTCS]	1	• Channel : CH 17 • No audio signals applied to the JIG cable. • Set the modulation analyzer to the same condition as "MODULATION BALANCE." • Transmitting	Rear panel	Connect a modulation analyzer to the antenna connector through an attenuator.	±0.68 to ±0.72 kHz
2TONE, 5TONE, DTMF [S.Tone]	1	• Channel : CH 18 • Transmitting	Rear panel	Connect a modulation analyzer to the antenna connector through an attenuator.	±1.50 kHz

*; [EUR] only.

6-4 RECEIVE ADJUSTMENT

Select an adjustment item using [↑] / [↓] keys, then set to the specified value using [←] / [→] keys on the connected PC's keyboard.

ADJUSTMENT		ADJUSTMENT CONDITION	UNIT	LOCATION	VALUE
RECEIVE SENSITIVITY [BPF (T1) C] [BPF (T2) C]	**NOTE:** "RECEIVE SENSITIVITY" must be adjusted before "S-METER." Otherwise, "S-METER" will not be adjusted properly.				
	1	• Channel : CH 3 • Connect the SSG to the antenna connector and set as; Frequency : 136.000 MHz Level : +20 dBμ† (–87 dBm) Modulation : 1 kHz Deviation : ±3.5 kHz • Receiving	SP jack	Connect the SINAD meter with an 4 Ω load to the SP jack.	Minimum distortion level
	CONVENIENT: The "RECEIVE SENSITIVITY" can be adjusted automatically. 1: Put the cursor on "[BPF C ALL]" and push [ENTER] key. 2: The connected PC tunes BPF's to peak levels automaticaly.				
S-METER (S3 level) [RSSI]	1	• Channel : CH 3 • Connect the SSG to the antenna connector and set as; Frequency : 136.000 MHz Level : +23 dBμ† (–84 dBm) Modulation : 1 kHz Deviation : ±3.5 kHz • Receiving	Push the [ENTER] key on the connected PC's keyboard to set "S3" level.		
(S1 level)	2	• Set the SSG as; Level : –7 dBμ† (–114 dBm) • Receiving	Push the [ENTER] key again to set "S1" level.		
SQUELCH [SQL]	1	• Channel : CH 3 • Close the squelch by adjusting the value of [SQL] item on the CS-F5060 ADJ's screen. • Connect the SSG to the antenna connector and set as; Frequency : 136.000 MHz Level : –14 dBμ† (–121 dBm) Modulation : 1 kHz Deviation : ±3.5 kHz • Receiving	External speaker	Connect an 4 Ω speaker to the SP jack.	Close the squelch by increase the value of [SQL]. Set the [SQL] to the value that the audio signals just appear.

†: The output level of the standard signal generator (SSG) is indicated as the SSG's open circuit.

SECTION 7 PARTS LIST

[FRONT UNIT]

REF NO.	ORDER NO.	DESCRIPTION		M.	H/V LOCATION
IC501	1130009121	S.IC	S1D15206F00A200	B	33.1/19.5
IC502	1110005771	S.IC	S-80942CNMC-G9CT2G	B	61.4/9.7
IC503	1140010771	S.IC	HD64F3687FPV	B	62.1/25.2
IC504	1130007111	S.IC	TC7W04FU (TE12L,F)	B	73.9/26.3
IC505	1110005310	S.IC	AN6123MS	B	10/8.4
IC506	1110005350	S.IC	NJM2870F05-TE1	B	84.9/9.9
IC507	1130006221	S.IC	TC4W53FU (TE12L,F)	B	6.5/19
IC508	1130008561	S.IC	TC75S51F (TE85L,F)	B	74/11.3
Q501	1590001050	S.TR	DTC114TUA T106	B	15.1/32.9
Q502	1590001050	S.TR	DTC114TUA T106	B	18/32.9
Q503	1590001330	S.TR	DTA114EUA T106	B	77/24.7
Q504	1530002851	S.TR	2SC4116-BL (TE85R,F)	B	91.5/22.4
Q505	1590001050	S.TR	DTC114TUA T106	B	92.5/18.8
Q506	1590000680	S.TR	DTC114EUA T106	B	77/27.4
Q507	1590001050	S.TR	DTC114TUA T106	B	51.4/30.2
D501	1750000370	S.DIO	DA221 TL	T	3.5/27.1
D502	1750000370	S.DIO	DA221 TL	T	3.5/25
D503	1750000370	S.DIO	DA221 TL	T	3.5/22.9
D504	1790001260	S.DIO	MA2S077-(TX)	B	50.9/23.1
D505	1790001250	S.DIO	MA2S111-(TX)	B	3.3/23.3
D506	1790001250	S.DIO	MA2S111-(TX)	B	82.1/21.7
D507	1790001250	S.DIO	MA2S111-(TX)	B	79.7/25.8
D508	1790000950	S.ZEN	MA8056-M (TX)	T	4.8/19.7
D509	1790000950	S.ZEN	MA8056-M (TX)	T	8.6/19.7
D510	1790000950	S.ZEN	MA8056-M (TX)	T	10.4/19.7
X501	6050011720	S.XTL	CR-764 (19.6608 MHz)	B	49.6/18.9
L501	6200003640	S.COL	MLF1608E 100K-T	B	12/19.1
R501	7030003810	S.RES	ERJ3GEYJ 125 V (1.2 M)	B	46/28.8
R502	7030003810	S.RES	ERJ3GEYJ 125 V (1.2 M)	B	46.6/23.8
R503	7310005130	S.TRI	RH03ADCS5X (470 k)	B	45.5/26.3
R504	7030005120	S.RES	ERJ2GEJ 102 X (1 k)	B	8/29.3
R505	7030005120	S.RES	ERJ2GEJ 102 X (1 k)	B	10/29.3
R506	7030005120	S.RES	ERJ2GEJ 102 X (1 k)	B	12/29.3
R507	7030005010	S.RES	ERJ2GEJ 681 X (680)	T	14.3/37.2
R508	7030005120	S.RES	ERJ2GEJ 102 X (1 k)	T	14.3/36.3
R509	7510001730	S.TMR	ERTJOEP 473J	B	59.9/17.1
R510	7030005120	S.RES	ERJ2GEJ 102 X (1 k)	B	61.1/17.1
R511	7030005530	S.RES	ERJ2GEJ 100 X (10)	B	57.1/19.4
R512	7030008010	S.RES	ERJ2GEJ 123 X (12 k)	B	52/22.7
R513	7030005050	S.RES	ERJ2GEJ 103 X (10 k)	B	63.8/10.2
R514	7030005160	S.RES	ERJ2GEJ 105 X (1 M)	B	56.1/20.7
R515	7030008010	S.RES	ERJ2GEJ 123 X (12 k)	B	52.3/23.9
R516	7030008010	S.RES	ERJ2GEJ 123 X (12 k)	B	49.5/23.9
R517	7410001140	S.ARY	EXB28V104JX	B	66.5/10.8
R518	7410001140	S.ARY	EXB28V104JX	B	67.5/19.2
R519	7030005090	S.RES	ERJ2GEJ 104 X (100 k)	B	51.5/26.9
R520	7030005090	S.RES	ERJ2GEJ 104 X (100 k)	B	71.6/26.8
R522	7030005090	S.RES	ERJ2GEJ 104 X (100 k)	T	3.3/17.2
R523	7030004980	S.RES	ERJ2GEJ 101 X (100)	B	13.2/10.9
R524	7030005090	S.RES	ERJ2GEJ 104 X (100 k)	B	71.6/28.4
R525	7030005240	S.RES	ERJ2GEJ 473 X (47 k)	B	80.2/27
R526	7030007300	S.RES	ERJ2GEJ 332 X (3.3 k)	B	79/24.4
R528	7030005090	S.RES	ERJ2GEJ 104 X (100 k)	B	71.7/24.1
R529	7030005090	S.RES	ERJ2GEJ 104 X (100 k)	B	82.1/19.6
R530	7030005160	S.RES	ERJ2GEJ 105 X (1 M)	B	5.4/10
R531	7030009280	S.RES	ERJ2GEJ 391 X	B	92/20.6
R532	7030005120	S.RES	ERJ2GEJ 102 X (1 k)	B	91.4/24.2
R533	7030007290	S.RES	ERJ2GEJ 222 X (2.2 k)	B	91.4/25.2
R534	7030009140	S.RES	ERJ2GEJ 272 X (2.7 k)	B	90.6/20.2
R535	7030005090	S.RES	ERJ2GEJ 104 X (100 k)	B	82.4/31.4
R536	7030005220	S.RES	ERJ2GEJ 223 X (22 k)	B	77.8/22.9
R537	7030005090	S.RES	ERJ2GEJ 104 X (100 k)	T	7.2/19.2
R538	7030005090	S.RES	ERJ2GEJ 104 X (100 k)	T	6.2/19.2
R539	7030010040	S.RES	ERJ2GEJ-JPW	B	76/15.9
R540	7030009290	S.RES	ERJ2GEJ 562 X (5.6 k)	B	4.3/10.9
R541	7030007290	S.RES	ERJ2GEJ 222 X (2.2 k)	B	3.3/16.6
R542	7030009160	S.RES	ERJ2GEJ 181 X (180)	B	89.8/24.2
R543	7030009160	S.RES	ERJ2GEJ 181 X (180)	B	89.8/25.2
R545	7030005240	S.RES	ERJ2GEJ 473 X (47 k)	T	11.8/19.2
R546	7210003050	VAR	EVU-F2KFK3 B14 (10KB)		
R547	7030005120	S.RES	ERJ2GEJ 102 X (1 k)	T	11.8/17.2
R548	7030005120	S.RES	ERJ2GEJ 102 X (1 k)	T	6.8/17.2
R549	7030005120	S.RES	ERJ2GEJ 102 X (1 k)	T	9.3/17.2
R550	7030005240	S.RES	ERJ2GEJ 473 X (47 k)	B	10.9/19.4
R551	7030007300	S.RES	ERJ2GEJ 332 X (3.3 k)	B	11/5.8
R552	7030009280	S.RES	ERJ2GEJ 391 X	B	10.1/5.8
R553	7030007290	S.RES	ERJ2GEJ 222 X (2.2 k)	B	75.2/8.7
R554	7030007290	S.RES	ERJ2GEJ 222 X (2.2 k)	B	71.4/12.4
R555	7030005220	S.RES	ERJ2GEJ 223 X (22 k)	B	71.4/11.5
R556	7030005050	S.RES	ERJ2GEJ 103 X (10 k)	B	73.2/8.7
R557	7030005050	S.RES	ERJ2GEJ 103 X (10 k)	B	71.8/10.2
R558	7030005060	S.RES	ERJ2GEJ 333 X (33 k)	B	74/13.5
R559	7030005090	S.RES	ERJ2GEJ 104 X (100 k)	B	11/20.8
R560	7030005090	S.RES	ERJ2GEJ 104 X (100 k)	T	6.2/20.8
C501	4030016930	S.CER	ECJ0EB1A104K	B	41.8/30.2
C502	4030016930	S.CER	ECJ0EB1A104K	B	40.9/30.2

[FRONT UNIT]

REF NO.	ORDER NO.	DESCRIPTION		M.	H/V LOCATION
C503	4030016930	S.CER	ECJ0EB1A104K	B	42.7/30.2
C504	4030016930	S.CER	ECJ0EB1A104K	B	43.6/30.2
C505	4030016930	S.CER	ECJ0EB1A104K	B	44.5/30.2
C506	4030017490	S.CER	C1608 JB 1A 105K-T	B	44.7/23.2
C507	4030017460	S.CER	ECJ0EB1E102K	B	46.1/22.7
C508	4030017490	S.CER	C1608 JB 1A 105K-T	B	43.4/23.2
C509	4030017730	S.CER	ECJ0EB1E471K	B	13.1/33.3
C510	4030017730	S.CER	ECJ0EB1E471K	B	18.6/30.5
C511	4030016790	S.CER	ECJ0EB1C103K	B	58.3/17.1
C512	4030016930	S.CER	ECJ0EB1A104K	B	62/17.1
C513	4030017030	S.CER	ECJ0EB1A273K	B	59.1/10.2
C514	4030016930	S.CER	ECJ0EB1A104K	B	58.3/18.3
C515	4030017630	S.CER	ECJ0EC1H120J	B	57.1/17.8
C516	4030017580	S.CER	ECJ0EC1H060C	B	48.9/22.7
C517	4030016790	S.CER	ECJ0EB1C103K	B	52.9/22.7
C518	4030017640	S.CER	ECJ0EC1H150J	B	49.8/22.7
C519	4030016930	S.CER	ECJ0EB1A104K	B	53.8/22.7
C520	4030017420	S.CER	ECJ0EC1H470J	T	12.5/36.3
C521	4030017460	S.CER	ECJ0EB1E102K	B	78.8/27.5
C522	4550006480	S.TAN	TEESVA 1C 475M8R	B	87.7/9.8
C523	4550006250	S.TAN	TEESVA 1A 106M8R	B	12.8/7.6
C524	4550006250	S.TAN	TEESVA 1A 106M8R	B	7.2/7.6
C525	4030017330	S.CER	ECJ0EF1C104Z	B	85.7/7.7
C526	4030016790	S.CER	ECJ0EB1C103K	B	84.1/7.7
C527	4030017420	S.CER	ECJ0EC1H470J	T	5.9/17.2
C528	4030017460	S.CER	ECJ0EB1E102K	T	8.4/17.2
C529	4550006250	S.TAN	TEESVA 1A 106M8R	B	82.1/9.8
C530	4030016930	S.CER	ECJ0EB1A104K	B	84.1/12.1
C531	4030017460	S.CER	ECJ0EB1E102K	B	79/22.5
C533	4030017460	S.CER	ECJ0EB1E102K	B	80/22.5
C534	4030017420	S.CER	ECJ0EC1H470J	B	76.2/22.9
C535	4030016930	S.CER	ECJ0EB1A104K	B	5.4/9.1
C536	4030016930	S.CER	ECJ0EB1A104K	B	3.3/18.2
C537	4030017460	S.CER	ECJ0EB1E102K	B	14/25
C538	4030017330	S.CER	ECJ0EF1C104Z	B	6/10.9
C539	4030017420	S.CER	ECJ0EC1H470J	T	10.9/17.2
C540	4030017460	S.CER	ECJ0EB1E102K	B	10.9/17.8
C541	4030017420	S.CER	ECJ0EC1H470J	B	8.5/10.9
C543	4030017420	S.CER	ECJ0EC1H470J	B	77.6/16.7
C544	4030017420	S.CER	ECJ0EC1H470J	B	79.8/16.7
C545	4030017420	S.CER	ECJ0EC1H470J	B	77.6/15.8
C546	4030017420	S.CER	ECJ0EC1H470J	B	74/15.3
C547	4030017460	S.CER	ECJ0EB1E102K	B	74/16.2
C548	4030017490	S.CER	C1608 JB 1A 105K-T	B	9.7/19.3
C549	4030016930	S.CER	ECJ0EB1A104K	B	3.7/21.2
C550	4030018900	S.CER	ECJ0EB0J474K	B	70.1/11.9
C551	4030016930	S.CER	ECJ0EB1A104K	B	70.9/10.2
C552	4030017460	S.CER	ECJ0EB1E102K	B	75.2/6.9
C553	4030017460	S.CER	ECJ0EB1E102K	B	71.4/13.3
C554	4030016790	S.CER	ECJ0EB1C103K	B	74.2/8.7
C555	4030017460	S.CER	ECJ0EB1E102K	B	74/14.4
C556	4550006480	S.TAN	TEESVA 1C 475M8R	B	76.9/10.2
J501	6510022021	S.CNR	14FLT-SM2-TB (LF) (SN)	B	88/28.5
J502	6510023091	S.CNR	20FLT-SM2-TB (LF) (SN)	B	75.5/19.5
J503	6450002210	CNR	3017-8821 <KIN>		
DS501	5030003020	LCD	L6-0226TVM-3		
DS502	5040002670	S.LED	CL-165HR/YG	T	18.2/35.9
DS503	5040002310	S.LED	SML-311YTT86	T	32.8/6.5
DS504	5040002310	S.LED	SML-311YTT86	T	46.1/6.3
DS505	5040002310	S.LED	SML-311YTT86	T	59.8/6.3
DS506	5040002310	S.LED	SML-311YTT86	T	92.3/24.5
DS507	5040002310	S.LED	SML-311YTT86	T	73.1/6.5
DS508	5040002310	S.LED	SML-311YTT86	T	31.7/26
DS509	5040002310	S.LED	SML-311YTT86	T	40.2/26
DS510	5040002310	S.LED	SML-311YTT86	T	48.7/26
DS511	5040002310	S.LED	SML-311YTT86	T	74.2/26
DS512	5040002310	S.LED	SML-311YTT86	T	65.7/26
DS513	5040002310	S.LED	SML-311YTT86	T	57.2/26
SP501	2510001400	SP			
W501	8900012711	CBL	OPC-1297A (P0.5,N20,L62) <TJM>		
W502	7120000470	JMP	ERDS2T0		
W503	7120000470	JMP	ERDS2T0		
EP502	8930072220	LCT	SRCN-2979-SP-N-W		

M.=Mounted side (T: Mounted on the Top side, B: Mounted on the Bottom side)
S.=Surface mount

[MAIN UNIT]

REF NO.	ORDER NO.	DESCRIPTION	M.	H/V LOCATION
IC1	1110005340	S.IC NJM12902V-TE1	T	82.3/12.9
IC2	1110006221	S.IC AK2346P-E2/P	B	44.7/11.7
IC3	1140013200	S.IC CD4053BPWR	B	58.7/9.3
IC4	1130010100	S.IC LMX2352TMX/NOPB	T	82.9/46
IC5	1110003491	S.IC TA31136FNG (D,EL)	T	28/13.9
IC6	1190001350	S.IC M62364FP 600D	B	84.9/12.9
IC7	1110005340	S.IC NJM12902V-TE1	T	108.5/43.7
IC8	1140013200	S.IC CD4053BPWR	B	58.7/16.1
IC9	1130012960	S.IC BU8872FS-E2	B	133.1/21.3
IC10	1190002051	S.IC SPM5001-TL-E	B	33.8/36.9
IC12	1190001340	S.IC M62334FP 600C	B	9.1/25.7
IC13	1110005771	S.IC S-80942CNMC-G9CT2G	B	126/44.8
IC14	1140013520	S.IC HD64F2506FC26DV	B	111.8/35.7
IC15	1150002042	IC RA30H1317M-121 [EXP-01], [EUR-01]		
	1150002073	IC RA60H1317M-125 [USA-01]		
IC16	1140012950	S.IC 24LC512T-I/SM	B	133.3/29
IC17	1110002751	S.IC TA75S01F (TE85R,F)	T	54.1/70.4
IC18	1180000970	S.IC AN78L05M-(E1)	B	113/65.3
IC19	1120002510	S.IC DS14C232TM	T	104.7/70.5
IC20	1180001251	S.IC TA7808F (TE16L,Q)	B	121.5/65.8
IC21	1110003091	IC LA4425A-E		
IC22	1110002751	S.IC TA75S01F (TE85R,F)	B	135.5/54.4
IC23	1130006221	S.IC TC4W53FU (TE12L,F)	B	106.9/9.6
Q1	1590003230	S.TR UNR9113J-(TX)	B	15.2/6
Q3	1530002851	S.TR 2SC4116-BL (TE85R,F)	B	36.4/15.5
Q4	1590001650	S.TR XP4601 (TX)	B	92.8/12.4
Q5	1590003290	S.TR UNR9213J-(TX)	B	76.7/50
Q6	1530002851	S.TR 2SC4116-BL (TE85R,F)	T	63.2/55.1
Q7	1560000541	S.FET 2SK880-Y (T5RICOM,F)	B	81.2/27.1
Q8	1530002851	S.TR 2SC4116-BL (TE85R,F)	B	79.2/31.8
Q9	1530002851	S.TR 2SC4116-BL (TE85R,F)	B	81.7/31.8
Q10	1560001360	S.FET 2SK3019 TL	B	57/31.6
Q12	1530002601	S.TR 2SC4215-O (TE85R,F)	T	26.9/20
Q13	1530002851	S.TR 2SC4116-BL (TE85R,F)	B	31.8/9.9
Q16	1590003290	S.TR UNR9213J-(TX)	T	113.2/47.6
Q17	1530002920	S.TR 2SC4226-T1 R25	T	50.9/47.6
Q18	1530002920	S.TR 2SC4226-T1 R25	T	61.6/42.6
Q19	1530002920	S.TR 2SC4226-T1 R25	T	72.1/43
Q20	1590003230	S.TR UNR9113J-(TX)	B	33.9/25.2
Q22	1530003311	S.TR 2SC5107-O (TE85R,F)	T	58.1/46.3
Q23	1590001400	S.TR XP1214 (TX)	B	55.7/40.9
Q24	1590003290	S.TR UNR9213J-(TX)	B	55.8/38.2
Q25	1530003311	S.TR 2SC5107-O (TE85R,F)	B	65.9/49.5
Q26	1590001400	S.TR XP1214 (TX)	B	67.2/43.1
Q27	1590003230	S.TR UNR9113J-(TX)	T	124.7/52
Q28	1590003290	S.TR UNR9213J-(TX)	B	123.4/46.3
Q29	1530003311	S.TR 2SC5107-O (TE85R,F)	B	53.5/51.2
Q30	1530000372	S.TR 2SC3356-T1B R (R24)	B	65.5/66
Q31	1580000731	S.FET 3SK293 (TE85L,F)	B	10.2/38.6
Q32	1560000841	S.FET 2SK1829 (TE85R,F)	T	11/42.5
Q33	1530002851	S.TR 2SC4116-BL (TE85R,F) [USA-01] only	T	47.5/69.4
Q34	1590003290	S.TR UNR9213J-(TX)	T	83/67.4
Q35	1520000460	S.TR 2SB1132 T100 R	T	100.1/57.9
Q36	1590001190	S.TR XP6501-(TX) .AB	T	104.3/55.8
Q37	1540000550	S.TR 2SD1664 T100Q	T	75.5/63.6
Q38	1510000920	S.TR 2SA1577 T106 Q	T	39.3/21.3
Q39	1590003290	S.TR UNR9213J-(TX)	T	42.6/21.3
Q40	1590003290	S.TR UNR9213J-(TX)	T	104.1/51.9
Q41	1590001451	S.FET 2SJ144-GR (TE85R,F)	B	110.3/83.3
Q42	1590003290	S.TR UNR9213J-(TX)	B	132.1/45
Q43	1590000990	S.TR DTC363EK T146	B	135.7/49
Q44	1590003290	S.TR UNR9213J-(TX)	T	108.5/21.6
Q45	1590003290	S.TR UNR9213J-(TX)	B	133.3/58.9
Q46	1590003290	S.TR UNR9213J-(TX)	T	117.9/84.4
Q47	1550000100	S.FET 2SJ377 (TE16L1,NQ)	B	131.3/71.5
Q48	1590003290	S.TR UNR9213J-(TX)	B	124.9/77.7
Q49	1530002851	S.TR 2SC4116-BL (TE85R,F)	B	139.3/37.2
Q50	1530002601	S.TR 2SC4215-O (TE85R,F)	T	40.6/39.2
Q51	1590003321	S.FET TPC6103 (TE85L,F)	B	133.6/63.4
Q52	1590003290	S.TR UNR9213J-(TX)	B	128.2/61.1
Q53	1590000430	S.TR DTC144EUA T106	B	52.3/67.4
Q54	1590000430	S.TR DTC144EUA T106	T	25.5/6.3
Q55	1560001360	S.FET 2SK3019 TL	T	75.5/20.9
Q57	1590003230	S.TR UNR9113J-(TX)	T	112/14.4
D1	1750001070	S.DIO DAN235ETL	T	10.4/15.7
D2	1750001070	S.DIO DAN235ETL	T	22.6/8.9
D3	1790001250	S.DIO MA2S111-(TX)	T	61.3/55
D4	1790001260	S.DIO MA2S077-(TX)	B	72.9/49.8
D5	1790001260	S.DIO MA2S077-(TX)	B	71.1/51.3
D6	1750001070	S.DIO DAN235ETL	T	30.6/20.8
D7	1160000140	S.DIO DAP222 TL	T	58.9/14
D8	1720000791	S.VCP HVC321B1TRF-E	T	49.5/32.4
D9	1720000791	S.VCP HVC321B1TRF-E	T	52.7/32.4
D10	1720000791	S.VCP HVC321B1TRF-E	T	60.5/30
D11	1720000641	S.VCP 1SV284 (TPH3,F)	T	52.7/33.6
D12	1720000641	S.VCP 1SV284 (TPH3,F)	T	52.7/34.8
D13	1720000791	S.VCP HVC321B1TRF-E	T	63.8/28.6
D14	1720000791	S.VCP HVC321B1TRF-E	T	73.6/30.4
D15	1720000641	S.VCP 1SV284 (TPH3,F)	T	63.8/31.3
D16	1720000641	S.VCP 1SV284 (TPH3,F)	T	63.8/30
D17	1720000791	S.VCP HVC321B1TRF-E	T	72.1/27.9
D18	1750000721	S.VCP HVC375BTRF-E	T	69.8/33.3
D19	1160000140	S.DIO DAP222 TL	B	120.5/17.8
D20	1720000471	S.VCP 1SV239 (TPH3,F)	T	69.4/34.9
D21	1750001070	S.DIO DAN235ETL	T	36.3/38.3
D22	1750000520	S.DIO DAN222TL	T	124.7/54.5
D23	1790001260	S.DIO MA2S077-(TX)	T	125.6/39.2
D24	1790001260	S.DIO MA2S077-(TX)	B	50.7/53.2

[MAIN UNIT]

REF NO.	ORDER NO.	DESCRIPTION	M.	H/V LOCATION
D25	1790001260	S.DIO MA2S077-(TX)	B	49.3/50.8
D26	1750000711	S.VCP HVC350BTRF-E	B	17.7/36
D27	1750000711	S.VCP HVC350BTRF-E	B	16.2/36
D28	1750000370	S.DIO DA221 TL	T	10/37.5
D29	1790001250	S.DIO MA2S111-(TX)	T	12/39.5
D30	1750000721	S.VCP HVC375BTRF-E	B	8.6/44.7
D31	1790001250	S.DIO MA2S111-(TX)	T	8.5/43.7
D32	1750001080	S.DIO RB886G T2R	T	64.1/76.5
D33	1750001080	S.DIO RB886G T2R	T	65.8/75.8
D34	1750000721	S.VCP HVC375BTRF-E	B	8.6/47.4
D35	1790001260	S.DIO MA2S077-(TX)	B	17.9/48.1
D36	1790001240	S.DIO MA2S728-(TX)	B	16.5/48.1
D37	1750000370	S.DIO DA221 TL	T	75.5/67.6
D38	1750000511	S.DIO UX9401F-STD/TR [EXP-01], [EUR-01] only	T	30/66
D39	1710001061	DIO L407CDB [USA-01] only		
D42	1750001360	S.DIO L709CER (9401)	T	34.6/58.7
D45	1750000520	S.DIO DAN222TL	T	91.8/57.5
D46	1750000520	S.DIO DAN222TL	T	89.6/57.5
D47	1790001211	S.DIO 1SS375-TL-E	B	29.2/63.8
D48	1750000520	S.DIO DAN222TL	B	93/61.5
D49	1790001211	S.DIO 1SS375-TL-E	B	6/52.8
D50	1750000370	S.DIO DA221 TL	B	97.2/65.8
D51	1790001211	S.DIO 1SS375-TL-E	B	3.9/79.7
D52	1750000520	S.DIO DAN222TL	B	132.5/41
D53	1790001250	S.DIO MA2S111-(TX)	B	133.3/47.3
D55	1750000370	S.DIO DA221 TL	B	108.8/57.4
D56	1750000370	S.DIO DA221 TL	T	108.8/60.6
D57	1750000370	S.DIO DA221 TL	B	95.1/65.8
D58	1750000520	S.DIO DAN222TL	T	94/57.5
D59	1750000520	S.DIO DAN222TL	B	104/80.4
D62	1790000700	DIO DSA3A1		
D63	1750000520	S.DIO DAN222TL	B	110.3/80.9
D65	1750000520	S.DIO DAN222TL	B	129.7/58.9
D66	1790001621	S.DIO 1SV308 (TPL3,F)	T	33.9/38.8
D67	1790001621	S.DIO 1SV308 (TPL3,F)	T	33.9/37.5
D68	1790001621	S.DIO 1SV308 (TPL3,F)	T	29.9/23.2
D69	1790001621	S.DIO 1SV308 (TPL3,F)	T	31.2/23.2
D70	1750000351	S.DIO 1SV252 (TE85L,F)	T	73.6/75.5
D71	1730002410	S.ZEN MA8200-H (TX)	T	118.3/86.3
FI1	2020001410	CER CFWLB450KGFA-B0		
FI2	2020002180	S.CER CFWKA450KHFA-R0	T	15.4/9.3
FI3	2030000500	S.MLH FL-401 (46.35 MHz)	T	24.7/28.4
FI4	2030000150	S.MLH FL-335 (46.350 MHz)	T	35.6/28.4
FI5	2040001440	S.LC NFE31PT152Z1E9L	B	94.5/77
FI6	2040001440	S.LC NFE31PT152Z1E9L	B	94.5/73.7
FI7	2040001440	S.LC NFE31PT152Z1E9L [USA-01] only	B	94.5/70.3
X1	6050012380	S.XTL CR-826 (15.3 MHz)	T	84.2/34.7
X2	6050011730	S.XTL CR-765 (3.6864 MHz)	T	48.3/11.6
X3	6070000191	S.DCR CDBKB450KCAY24-R0	T	37.1/10.3
X4	6050012320	S.XTL CR-818 (4.194304 MHz)	T	139.1/21.9
X5	6050011720	S.XTL CR-764 (19.6608 MHz)	T	120.5/44.3
L1	6200004660	S.COL MLF1608A 1R8K-T	T	82.7/54.3
L2	6200003540	S.COL MLF1608D R22K-T	B	34.4/14.7
L3	6200004480	S.COL MLF1608D R82K-T	B	29.7/16.2
L4	6200007911	S.COL ELJRF 18NJFB	B	75.9/48.3
L5	6200007170	S.COL MLF1608A 3R3K-T	T	49.5/31
L6	6200007170	S.COL MLF1608A 3R3K-T	T	52.7/31
L7	6200007170	S.COL MLF1608A 3R3K-T	T	60.5/28.6
L8	6200007170	S.COL MLF1608A 3R3K-T	T	74/27.5
L9	6200007170	S.COL MLF1608A 3R3K-T	T	69.8/32
L10	6200009910	S.COL C6342A-88NG-A	T	51.2/39.2
L11	6200003640	S.COL MLF1608E 100K-T	T	48.3/33.6
L12	6200009910	S.COL C6342A-88NG-A	T	61.6/35.5
L13	6200007170	S.COL MLF1608A 3R3K-T	T	63.8/27.2
L14	6200003640	S.COL MLF1608E 100K-T	T	60/31.4
L15	6200012450	S.COL 0.25-1.9-8TL 73N	T	73.3/35.9
L16	6200008090	S.COL LQW2BHN68NJ03L	T	69.5/28
L17	6200003640	S.COL MLF1608E 100K-T	T	73.7/32.6
L18	6130003000	S.COL #617DB-1714=P3	B	39/36.2
L19	6130003000	S.COL #617DB-1714=P3	B	34.5/42.6
L20	6200009181	S.COL ELJRE R10JFA	T	57.3/48.3
L21	6200007911	S.COL ELJRF 18NJFB	B	66.3/51.2
L22	6200005721	S.COL ELJRE 33NGFA	B	40.6/48.1
L23	6200005721	S.COL ELJRE 33NGFA	B	45.5/48.1
L24	6130003000	S.COL #617DB-1714=P3	B	27/36.2
L25	6200009151	S.COL ELJRE 82NJFA	B	54.2/53.4
L26	6200007750	S.COL LQW2BHN56NJ03L	B	20.3/36.7
L27	6200009181	S.COL ELJRE R10JFA	B	66.5/69.4
L28	6200007750	S.COL LQW2BHN56NJ03L	B	12.5/36.7
L29	6200009171	S.COL ELJRE 47NJFA	B	70.5/70.8
L30	6200009171	S.COL ELJRE 47NJFA	T	72.6/72.7
L31	6200008090	S.COL LQW2BHN68NJ03L	B	8.3/42
L32	6200008090	S.COL LQW2BHN68NJ03L	B	8.4/50
L33	6200010050	S.COL AS080547-47N	T	33.3/73.9
L34	6200007750	S.COL LQW2BHN56NJ03L	B	13.2/51.7
L35	6200006991	S.COL ELJRE 56NGFA	B	20.1/50.7
L36	6200010420	S.COL FHW1210HC 1R0JGT	B	39.2/66
L37	6200010050	S.COL AS080547-47N	T	30/58.5
L38	6200010050	S.COL AS080547-47N	T	21.6/58
L39	6200010050	S.COL AS080547-47N	T	12.5/57.5
L40	6200010050	S.COL AS080547-47N	T	10.5/81
L41	6200002861	S.COL NLV25T-4R7J	T	122.3/54.4
L42	6200005011	S.COL NLV25T-100J	T	40.7/42.1
L43	6200010680	S.COL C2520C-R22G-A (0.22U)	T	42.1/34.9
L44	6200010740	S.COL C2520C-R27G-A	T	37.8/35.3
L45	6200003960	S.COL MLF1608A 1R0K-T	T	71.3/72.7
L46	6200005661	S.COL ELJRE 10NGFA	T	78.3/42.3

M.=Mounted side (T: Mounted on the Top side, B: Mounted on the Bottom side)
S.=Surface mount

[MAIN UNIT]

REF NO.	ORDER NO.	DESCRIPTION	M.	H/V LOCATION
R1	7030005060	S.RES ERJ2GEJ 333 X (33 k)	B	38.1/5.8
R2	7510001730	S.TMR ERTJOEP 473J	T	90.4/35.6
R3	7030005050	S.RES ERJ2GEJ 103 X (10 k)	T	79/11.9
R4	7030005700	S.RES ERJ2GEJ 274 X (270 k)	B	88.5/18.9
R5	7030005090	S.RES ERJ2GEJ 104 X (100 k)	T	90.4/34
R6	7030005160	S.RES ERJ2GEJ 105 X (1 M)	T	84/19.4
R7	7030005230	S.RES ERJ2GEJ 334 X (330 k)	T	84/17.5
R8	7410001130	S.ARY EXB28V102JX	T	86.1/52.4
R9	7030007570	S.RES ERJ2GEJ 122 X (1.2 k)	B	34.3/11.6
R10	7030007060	S.RES ERJ2GEJ 684X (680 k)	B	35.8/13.7
R11	7030010040	S.RES ERJ2GEJ-JPW	T	8.5/9.2
R12	7030004970	S.RES ERJ2GEJ 470 X (47)	T	31/17.2
R13	7030005600	S.RES ERJ2GEJ 273 X (27 k)	T	8.8/15.9
R14	7030005210	S.RES ERJ2GEJ 822 X (8.2 k)	T	7.5/7.4
R15	7030005070	S.RES ERJ2GEJ 683 X (68 k)	B	93.3/14.4
R17	7030007570	S.RES ERJ2GEJ 122 X (1.2 k)	B	93.3/15.3
R18	7030008300	S.RES ERJ2GEJ 184 X (180 k)	B	79/11.8
R19	7030005230	S.RES ERJ2GEJ 334 X (330 k)	T	89.3/9
R20	7030005090	S.RES ERJ2GEJ 104 X (100 k)	T	85.6/8.3
R21	7030005070	S.RES ERJ2GEJ 683 X (68 k)	T	86.6/8.3
R22	7030005050	S.RES ERJ2GEJ 103 X (10 k)	B	38.1/7.5
R23	7030005050	S.RES ERJ2GEJ 103 X (10 k)	B	38.1/9.2
R24	7030005060	S.RES ERJ2GEJ 333 X (33 k)	B	37.2/10.5
R25	7030005120	S.RES ERJ2GEJ 102 X (1 k)	B	100.9/51.4
R26	7030005000	S.RES ERJ2GEJ 471 X (470)	B	87.5/5.3
R27	7030004980	S.RES ERJ2GEJ 101 X (100)	T	53.9/5.6
R28	7030010040	S.RES ERJ2GEJ-JPW	T	59.4/5.6
R29	7030005000	S.RES ERJ2GEJ 471 X (470)	T	116.4/14.5
R30	7030005170	S.RES ERJ2GEJ 474 X (470 k)	B	37.2/9.2
R31	7030007340	S.RES ERJ2GEJ 153 X (15 k)	B	36.3/9.2
R32	7030005720	S.RES ERJ2GEJ 563 X (56 k)	B	37.2/7.5
R33	7030005160	S.RES ERJ2GEJ 105 X (1 M)	T	80.7/8.4
R34	7030005040	S.RES ERJ2GEJ 472 X (4.7 k)	T	80.7/7.2
R35	7030005120	S.RES ERJ2GEJ 102 X (1 k)	T	77.6/9.5
R36	7030005030	S.RES ERJ2GEJ 152 X (1.5 k)	B	27/14.7
R37	7030007300	S.RES ERJ2GEJ 332 X (3.3 k)	B	15.2/8.6
R38	7030005210	S.RES ERJ2GEJ 822 X (8.2 k)	T	22.9/6.2
R39	7030005600	S.RES ERJ2GEJ 273 X (27 k)	T	24/9.1
R40	7030005170	S.RES ERJ2GEJ 474 X (470 k)	T	25.9/10.6
R41	7030007290	S.RES ERJ2GEJ 222 X (2.2 k)	T	27.6/6.2
R42	7030005090	S.RES ERJ2GEJ 104 X (100 k)	B	94.8/11.7
R43	7030007300	S.RES ERJ2GEJ 332 X (3.3 k)	B	94.8/10
R44	7030007340	S.RES ERJ2GEJ 153 X (15 k)	B	90.7/11.9
R45	7030005220	S.RES ERJ2GEJ 223 X (22 k)	B	92.8/10
R46	7030005040	S.RES ERJ2GEJ 472 X (4.7 k)	T	92.1/14.1
R47	7030005050	S.RES ERJ2GEJ 103 X (10 k)	T	92.1/13.1
R48	7030005060	S.RES ERJ2GEJ 333 X (33 k)	B	50.9/8.6
R49	7030005160	S.RES ERJ2GEJ 105 X (1 M)	B	49.7/13.7
R50	7030005090	S.RES ERJ2GEJ 104 X (100 k)	B	49.7/11
R51	7030005050	S.RES ERJ2GEJ 103 X (10 k)	T	52.4/7
R52	7030007340	S.RES ERJ2GEJ 153 X (15 k)	T	59.1/12.5
R53	7030005000	S.RES ERJ2GEJ 471 X (470)	T	86.2/37.7
R54	7030010040	S.RES ERJ2GEJ-JPW	B	78.7/36.4
R55	7030005290	S.RES ERJ2GEJ 682 X (6.8 k)	T	81.8/25.3
R56	7030005040	S.RES ERJ2GEJ 472 X (4.7 k)	B	77.7/48.4
R57	7030005090	S.RES ERJ2GEJ 104 X (100 k)	B	28.3/14.3
R58	7030005050	S.RES ERJ2GEJ 103 X (10 k)	T	27.6/9
R59	7030005170	S.RES ERJ2GEJ 474 X (470 k)	T	27.6/8.1
R60	7030005000	S.RES ERJ2GEJ 471 X (470)	T	30.9/10.2
R61	7030005040	S.RES ERJ2GEJ 472 X (4.7 k)	T	28.8/8.5
R62	7030005040	S.RES ERJ2GEJ 472 X (4.7 k)	B	32.2/11.9
R63	7030005220	S.RES ERJ2GEJ 223 X (22 k)	B	92.8/8.3
R64	7030005220	S.RES ERJ2GEJ 223 X (22 k)	B	92.8/6.5
R65	7030005090	S.RES ERJ2GEJ 104 X (100 k)	B	50.9/9.5
R66	7030005050	S.RES ERJ2GEJ 103 X (10 k)	T	86.6/11.8
R67	7030005050	S.RES ERJ2GEJ 103 X (10 k)	T	53.4/7
R68	7030010040	S.RES ERJ2GEJ-JPW	B	53.7/17.9
R69	7030010040	S.RES ERJ2GEJ-JPW	T	85.6/13.6
R71	7030005090	S.RES ERJ2GEJ 104 X (100 k)	T	57.7/6.3
R72	7030007290	S.RES ERJ2GEJ 222 X (2.2 k)	T	64.9/55.6
R73	7030005000	S.RES ERJ2GEJ 471 X (470)	B	83.2/26.9
R74	7030007300	S.RES ERJ2GEJ 332 X (3.3 k)	B	81.8/25.3
R75	7030009140	S.RES ERJ2GEJ 272 X (2.7 k)	B	79.2/34
R76	7030007340	S.RES ERJ2GEJ 153 X (15 k)	B	80.3/29.1
R77	7030005580	S.RES ERJ2GEJ 560 X (56)	T	78.2/47.2
R78	7030005070	S.RES ERJ2GEJ 683 X (68 k)	B	81.5/34
R79	7030005040	S.RES ERJ2GEJ 472 X (4.7 k)	B	74.8/50
R80	7030005040	S.RES ERJ2GEJ 472 X (4.7 k)	B	70/50.9
R81	7030005110	S.RES ERJ2GEJ 224 X (220 k)	B	55.5/31.4
R82	7030005110	S.RES ERJ2GEJ 224 X (220 k)	B	66.3/33.3
R83	7030008400	S.RES ERJ2GEJ 182 X (1.8 k)	T	32.6/10.2
R84	7030007280	S.RES ERJ2GEJ 331 X (330)	T	24.6/20.3
R85	7030005110	S.RES ERJ2GEJ 224 X (220 k)	T	24.6/21.2
R86	7030007300	S.RES ERJ2GEJ 332 X (3.3 k)	B	30/10.5
R87	7030007300	S.RES ERJ2GEJ 332 X (3.3 k)	T	32.2/20.6
R88	7030005120	S.RES ERJ2GEJ 102 X (1 k)	B	91.7/6.5
R90	7030005000	S.RES ERJ2GEJ 471 X (470)	B	89.4/18.9
R91	7030005700	S.RES ERJ2GEJ 274 X (270 k)	T	85.6/11.8
R92	7030005090	S.RES ERJ2GEJ 104 X (100 k)	T	87.3/13.4
R93	7030005310	S.RES ERJ2GEJ 124 X (120 k)	T	83.9/8.2
R94	7030005080	S.RES ERJ2GEJ 823 X (82 k)	T	108/34.7
R95	7030005720	S.RES ERJ2GEJ 563 X (56 k)	T	108/33.8
R96	7030005240	S.RES ERJ2GEJ 473 X (47 k)	B	63.7/15.5
R97	7030005060	S.RES ERJ2GEJ 333 X (33 k)	B	53.3/16.6
R98	7030005040	S.RES ERJ2GEJ 472 X (4.7 k)	B	62.1/19.4
R99	7030007350	S.RES ERJ2GEJ 393 X (39 k)	B	60.2/19.4
R100	7030005030	S.RES ERJ2GEJ 152 X (1.5 k)	B	77.9/34.4
R101	7030008280	S.RES ERJ2GEJ 271 X (270)	B	79.2/29.1
R102	7030005530	S.RES ERJ2GEJ 100 X (10)	T	23/20.3
R103	7030005600	S.RES ERJ2GEJ 273 X (27 k)	B	29.9/23.8
R104	7030007280	S.RES ERJ2GEJ 331 X (330)	T	26.9/22.6
R105	7030005600	S.RES ERJ2GEJ 273 X (27 k)	B	30.9/23.8
R106	7030007270	S.RES ERJ2GEJ 151 X (150)	T	34.3/22.5
R107	7030007340	S.RES ERJ2GEJ 153 X (15 k)	B	129.7/52.3

[MAIN UNIT]

REF NO.	ORDER NO.	DESCRIPTION	M.	H/V LOCATION
R108	7030005240	S.RES ERJ2GEJ 473 X (47 k)	B	82.3/18.9
R109	7030005700	S.RES ERJ2GEJ 274 X (270 k)	B	81.3/18.9
R110	7030005050	S.RES ERJ2GEJ 103 X (10 k)	T	78.4/20.2
R111	7030005050	S.RES ERJ2GEJ 103 X (10 k)	T	95.9/28.3
R112	7030005700	S.RES ERJ2GEJ 274 X (270 k)	T	80.8/20.1
R113	7030005240	S.RES ERJ2GEJ 473 X (47 k)	B	57.9/19.4
R114	7030005090	S.RES ERJ2GEJ 104 X (100 k)	B	53.7/13.3
R115	7030005090	S.RES ERJ2GEJ 104 X (100 k)	T	114.4/18.4
R116	7030005090	S.RES ERJ2GEJ 104 X (100 k)	B	85.3/7.3
R118	7030006610	S.RES ERJ2GEJ 394 X (390 k)	T	89.5/11.7
R120	7030009280	S.RES ERJ2GEJ 391 X	T	30.3/34.3
R122	7030005600	S.RES ERJ2GEJ 273 X (27 k)	T	32.3/35.2
R123	7030005600	S.RES ERJ2GEJ 273 X (27 k)	T	33.5/35.2
R125	7030004970	S.RES ERJ2GEJ 470 X (47)	T	35/34
R127	7030005050	S.RES ERJ2GEJ 103 X (10 k)	B	79.1/18.3
R128	7030008290	S.RES ERJ2GEJ 183 X (18 k)	T	112.1/45.1
R129	7030005040	S.RES ERJ2GEJ 472 X (4.7 k)	T	112.1/44.1
R130	7030005070	S.RES ERJ2GEJ 683 X (68 k)	T	104.9/43.2
R131	7030005070	S.RES ERJ2GEJ 683 X (68 k)	T	104.9/44.1
R132	7030004980	S.RES ERJ2GEJ 101 X (100)	T	114.4/17.5
R134	7030005160	S.RES ERJ2GEJ 105 X (1 M)	T	128.9/26.3
R135	7030005160	S.RES ERJ2GEJ 105 X (1 M)	T	128.9/25.3
R136	7030005160	S.RES ERJ2GEJ 105 X (1 M)	T	128.9/24.2
R139	7410001140	S.ARY EXB28V104JX	T	130.6/20.6
R140	7030011000	S.RES RR0510P-392-D (3.9 k)	T	48.1/47.2
R141	7030008340	S.RES RR0510P-182-D (1.8 k)	T	50.8/45.4
R142	7030010040	S.RES ERJ2GEJ-JPW	T	49/47.2
R143	7030011000	S.RES RR0510P-392-D (3.9 k)	T	58.7/42.2
R144	7030008340	S.RES RR0510P-182-D (1.8 k)	T	61.7/40.4
R145	7030010040	S.RES ERJ2GEJ-JPW	T	59.6/42.2
R146	7030011000	S.RES RR0510P-392-D (3.9 k)	T	71.8/45.8
R147	7030008340	S.RES RR0510P-182-D (1.8 k)	T	70/41.9
R148	7030010040	S.RES ERJ2GEJ-JPW	T	71.8/44.9
R149	7030005310	S.RES ERJ2GEJ 124 X (120 k)	T	69.1/36.3
R150	7030005240	S.RES ERJ2GEJ 473 X (47 k)	T	89.8/15.5
R151	7030005060	S.RES ERJ2GEJ 333 X (33 k)	T	91/16.1
R152	7030005090	S.RES ERJ2GEJ 104 X (100 k)	T	88.9/16.4
R153	7030007300	S.RES ERJ2GEJ 332 X (3.3 k)	T	39.9/32.2
R154	7030004970	S.RES ERJ2GEJ 470 X (47)	T	42.9/40.1
R155	7030005120	S.RES ERJ2GEJ 102 X (1 k)	T	41.7/32.4
R156	7030004970	S.RES ERJ2GEJ 470 X (47)	T	42.5/41.3
R157	7030005090	S.RES ERJ2GEJ 104 X (100 k)	B	33.7/23.6
R158	7030005240	S.RES ERJ2GEJ 473 X (47 k)	T	112.1/42.3
R159	7030005240	S.RES ERJ2GEJ 473 X (47 k)	T	112.1/40.5
R160	7030005240	S.RES ERJ2GEJ 473 X (47 k)	T	113.8/38.7
R161	7030005070	S.RES ERJ2GEJ 683 X (68 k)	T	104.9/46.8
R162	7030005240	S.RES ERJ2GEJ 473 X (47 k)	T	128.2/14.4
R163	7030005240	S.RES ERJ2GEJ 473 X (47 k)	T	128.7/16.3
R164	7030005240	S.RES ERJ2GEJ 473 X (47 k)	T	129.4/14.4
R165	7030005230	S.RES ERJ2GEJ 334 X (330 k)	T	128.7/17.8
R166	7030005230	S.RES ERJ2GEJ 334 X (330 k)	T	128.7/18.7
R167	7030005230	S.RES ERJ2GEJ 334 X (330 k)	T	129.8/16.2
R168	7030006581	S.RES ERA3YED 122V (1.2 k)	T	53.6/47.5
R169	7030007230	S.RES ERA3YED 102V (1 k)	T	63.8/42.6
R170	7030010390	S.RES ERA3YED 821V (820)	T	74.1/43.2
R171	7030005090	S.RES ERJ2GEJ 104 X (100 k)	T	56.3/46.7
R172	7030008280	S.RES ERJ2GEJ 271 X (270)	B	36.4/46.4
R173	7030007270	S.RES ERJ2GEJ 151 X (150)	B	39/31.2
R174	7030004980	S.RES ERJ2GEJ 101 X (100)	B	34.6/38.7
R175	7030004980	S.RES ERJ2GEJ 101 X (100)	B	33/38.7
R176	7030005590	S.RES ERJ2GEJ 680 X (68)	B	31.3/37.4
R177	7030005590	S.RES ERJ2GEJ 680 X (68)	B	31.3/34.9
R178	7030005240	S.RES ERJ2GEJ 473 X (47 k)	T	113.8/37.8
R179	7030008300	S.RES ERJ2GEJ 184 X (180 k)	T	117.6/34.6
R180	7030005720	S.RES ERJ2GEJ 563 X (56 k)	T	118.3/35.3
R181	7030005220	S.RES ERJ2GEJ 223 X (22 k)	T	119/36
R182	7030005120	S.RES ERJ2GEJ 102 X (1 k)	T	116.9/33.9
R183	7030005070	S.RES ERJ2GEJ 683 X (68 k)	T	103.1/46.8
R184	7030005220	S.RES ERJ2GEJ 223 X (22 k)	T	113.8/36.9
R185	7030005070	S.RES ERJ2GEJ 683 X (68 k)	B	102.3/45.6
R186	7030005700	S.RES ERJ2GEJ 274 X (270 k)	T	81.8/18.9
R187	7030005230	S.RES ERJ2GEJ 334 X (330 k)	T	80.6/17.5
R188	7030005090	S.RES ERJ2GEJ 104 X (100 k)	T	78.5/14.9
R189	7030005720	S.RES ERJ2GEJ 563 X (56 k)	T	78.5/15.8
R190	7030006610	S.RES ERJ2GEJ 394 X (390 k)	T	80.6/18.4
R191	7030004980	S.RES ERJ2GEJ 101 X (100)	T	60.5/47
R192	7030004980	S.RES ERJ2GEJ 101 X (100)	B	66.3/53.2
R193	7030005050	S.RES ERJ2GEJ 103 X (10 k)	B	66.3/45.2
R194	7030005110	S.RES ERJ2GEJ 224 X (220 k)	B	62.7/50.8
R195	7030009320	S.RES ERJ2GEJ 4R7 X (4.7)	B	55.8/50.3
R196	7030005120	S.RES ERJ2GEJ 102 X (1 k)	B	65.2/42.8
R197	7030005050	S.RES ERJ2GEJ 103 X (10 k)	B	64.7/44.5
R198	7030010090	S.RES ERJ2GEJ 180 X (18)	B	36/47.6
R199	7030008280	S.RES ERJ2GEJ 271 X (270)	B	37.3/47.6
R200	7030005050	S.RES ERJ2GEJ 103 X (10 k)	B	8.4/20.6
R201	7410001130	S.ARY EXB28V102JX	B	117/51.7
R202	7030005090	S.RES ERJ2GEJ 104 X (100 k)	B	122.5/44.8
R203	7030005120	S.RES ERJ2GEJ 102 X (1 k)	B	127.4/47.3
R204	7410000750	S.ARY EXB-V4V 104JV (100 k)	B	129.6/42.7
R205	7030008010	S.RES ERJ2GEJ 123 X (12 k)	T	127.5/40.1
R206	7030005120	S.RES ERJ2GEJ 102 X (1 k)	B	127/39.5
R207	7030005050	S.RES ERJ2GEJ 103 X (10 k)	T	120.9/37.5
R208	7030005050	S.RES ERJ2GEJ 103 X (10 k)	T	121.6/38.2
R209	7410001130	S.ARY EXB28V102JX	B	125.8/40.8
R210	7030008010	S.RES ERJ2GEJ 123 X (12 k)	T	124.2/38.4
R211	7030008010	S.RES ERJ2GEJ 123 X (12 k)	T	125.9/41.1
R212	7030005160	S.RES ERJ2GEJ 105 X (1 M)	T	122.1/41.1
R213	7030005090	S.RES ERJ2GEJ 104 X (100 k)	B	55.3/51.8
R214	7030004980	S.RES ERJ2GEJ 101 X (100)	B	56.4/54
R215	7030005050	S.RES ERJ2GEJ 103 X (10 k)	B	63.5/61.3
R216	7030005590	S.RES ERJ2GEJ 680 X (68)	B	61.9/62.3
R218	7030010040	S.RES ERJ2GEJ-JPW	B	56.4/51.8
R219	7030005050	S.RES ERJ2GEJ 103 X (10 k)	B	46/49.8
R220	7030005040	S.RES ERJ2GEJ 472 X (4.7 k)	B	49.3/52

M.=Mounted side (T: Mounted on the Top side, B: Mounted on the Bottom side)
S.=Surface mount

[MAIN UNIT]

REF NO.	ORDER NO.	DESCRIPTION	M.	H/V LOCATION
R221	7030005050	S.RES ERJ2GEJ 103 X (10 k)	B	44.4/49.8
R222	7030005090	S.RES ERJ2GEJ 104 X (100 k)	B	17.7/33.9
R223	7030005090	S.RES ERJ2GEJ 104 X (100 k)	B	16.2/33.9
R224	7030005050	S.RES ERJ2GEJ 103 X (10 k)	B	15.7/32.7
R225	7030005000	S.RES ERJ2GEJ 471 X (470)	B	8/19.2
R226	7030004980	S.RES ERJ2GEJ 101 X (100)	T	109.7/53.5
R227	7030005090	S.RES ERJ2GEJ 104 X (100 k)	B	107.1/49.3
R228	7410001140	S.ARY EXB28V104JX	T	103.3/49
R230	7030005050	S.RES ERJ2GEJ 103 X (10 k)	B	124.7/42.7
R232	7030005530	S.RES ERJ2GEJ 100 X (10)	T	120.4/41.1
R233	7410000750	S.ARY EXB-V4V 104JV (100 k)	T	130/34.7
R234	7410001130	S.ARY EXB28V102JX	B	129.4/34.4
R236	7030009530	S.RES ERJ2GEJ 270 X (27)	B	63.9/71.5
R237	7030005040	S.RES ERJ2GEJ 472 X (4.7 k)	B	65.3/69.7
R238	7030005060	S.RES ERJ2GEJ 333 X (33 k) [EXP-01], [EUR-01]	B	61.9/65.1
	7030008010	S.RES ERJ2GEJ 123 X (12 k) [USA-01]	B	61.9/65.1
R240	7030005570	S.RES ERJ2GEJ 820 X (82)	B	62.4/67.4
R241	7030004980	S.RES ERJ2GEJ 101 X (100)	B	58.5/66
R242	7030004970	S.RES ERJ2GEJ 470 X (47)	T	12/33.1
R243	7030009320	S.RES ERJ2GEJ 4R7 X (4.7)	T	10/36
R244	7030005000	S.RES ERJ2GEJ 471 X (470)	B	15.1/36.3
R245	7030005530	S.RES ERJ2GEJ 100 X (10)	B	11.9/39.9
R246	7030005090	S.RES ERJ2GEJ 104 X (100 k)	B	7.5/38.6
R247	7030004990	S.RES ERJ2GEJ 221 X (220)	B	7.7/36.3
R248	7410001130	S.ARY EXB28V102JX	B	103.9/47.9
R249	7410001130	S.ARY EXB28V102JX	B	123.9/27.6
R250	7410001130	S.ARY EXB28V102JX	B	122.1/25.7
R251	7410001140	S.ARY EXB28V104JX	T	124.7/28.7
R252	7410001140	S.ARY EXB28V104JX	T	122.1/25.7
R253	7030005720	S.RES ERJ2GEJ 563 X (56 k)	T	9.5/40.5
R254	7030005050	S.RES ERJ2GEJ 103 X (10 k)	T	7.4/42.2
R255	7030005310	S.RES ERJ2GEJ 124 X (120 k)	B	6.6/38.6
R256	7030006610	S.RES ERJ2GEJ 394 X (390 k)	T	13/41
R257	7030005040	S.RES ERJ2GEJ 472 X (4.7 k)	T	9/42.2
R258	7030005170	S.RES ERJ2GEJ 474 X (470 k)	T	11/44.5
R259	7030005090	S.RES ERJ2GEJ 104 X (100 k)	B	6/45.1
R260	7030005090	S.RES ERJ2GEJ 104 X (100 k)	B	6/47
R261	7410001130	S.ARY EXB28V102JX	B	99.7/43.5
R262	7410001130	S.ARY EXB28V102JX	T	100.2/37.4
R263	7410001130	S.ARY EXB28V102JX	B	97/40.7
R264	7410001140	S.ARY EXB28V104JX	T	103.8/37
R265	7030005050	S.RES ERJ2GEJ 103 X (10 k)	T	103.8/39.2
R266	7410001130	S.ARY EXB28V102JX	B	120.1/23.5
R267	7410001130	S.ARY EXB28V102JX	B	118.3/21.7
R268	7410001130	S.ARY EXB28V102JX	B	116.5/19.9
R269	7030005090	S.RES ERJ2GEJ 104 X (100 k)	T	119.4/20.8
R271	7030004980	S.RES ERJ2GEJ 101 X (100)	T	77.6/78.5
R272	7030007280	S.RES ERJ2GEJ 331 X (330)	T	61/76.5
R273	7030005050	S.RES ERJ2GEJ 103 X (10 k)	T	62.3/76.1
R274	7030004980	S.RES ERJ2GEJ 101 X (100)	T	56.7/69.3
R275	7030005030	S.RES ERJ2GEJ 152 X (1.5 k)	T	64.8/73.8
R276	7030005040	S.RES ERJ2GEJ 472 X (4.7 k)	T	65.8/73.8
R277	7030005050	S.RES ERJ2GEJ 103 X (10 k)	B	4.8/45.6
R278	7030005050	S.RES ERJ2GEJ 103 X (10 k)	T	132.2/29.9
R279	7030005090	S.RES ERJ2GEJ 104 X (100 k)	T	131.3/29.9
R280	7410001130	S.ARY EXB28V102JX	B	95.2/38.9
R281	7030005090	S.RES ERJ2GEJ 104 X (100 k)	T	93.7/48.8
R282	7410000750	S.ARY EXB-V4V 104JV (100 k)	T	97.2/45.3
R283	7410001130	S.ARY EXB28V102JX	T	103.1/21.7
R284	7030005120	S.RES ERJ2GEJ 102 X (1 k)	T	111.2/25.1
R285	7410001130	S.ARY EXB28V102JX	B	107.1/19.9
R286	7410001140	S.ARY EXB28V104JX	T	121.7/22.2
R287	7030004990	S.RES ERJ2GEJ 221 X (220)	T	55.7/72.6
R288	7030005100	S.RES ERJ2GEJ 154 X (150 k)	T	54.1/68.2
	7030005170	S.RES ERJ2GEJ 474 X (470 k) [USA-01]	B	38/63.7
	7030008300	S.RES ERJ2GEJ 184 X (180 k) [EXP-01], [EUR-01]	B	38/63.7
R290	7520000260	S.POS PRF18BB471QB1RB [USA-01] only	T	33.9/63
R291	7030005120	S.RES ERJ2GEJ 102 X (1 k)	T	109.2/24.5
R292	7030006070	S.RES ERJ12YJ101U (100)	B	43.6/66.1
R293	7030005120	S.RES ERJ2GEJ 102 X (1 k)	T	50.6/70.5
R294	7030005050	S.RES ERJ2GEJ 103 X (10 k)	T	51.7/68.2
R295	7030008290	S.RES ERJ2GEJ 183 X (18 k)	T	50.6/71.4
R296	7030005040	S.RES ERJ2GEJ 472 X (4.7 k)	T	53.8/64.2
R297	7030008010	S.RES ERJ2GEJ 123 X (12 k)	T	50.5/68.6
R298	7030005090	S.RES ERJ2GEJ 104 X (100 k)	T	45.6/69.9
R300	7030005050	S.RES ERJ2GEJ 103 X (10 k)	B	99.9/59.6
R301	7030007290	S.RES ERJ2GEJ 222 X (2.2 k)	T	106.2/55.6
R302	7030000480	S.RES MCR10EZHJ 6.8 k	T	79/64.4
R303	7030000480	S.RES MCR10EZHJ 6.8 k	T	80.9/64.4
R304	7030000440	S.RES MCR10EZHJ 3.3 k	T	82.8/64.4
R305	7030005050	S.RES ERJ2GEJ 103 X (10 k)	T	40.3/19.4
R306	7030005040	S.RES ERJ2GEJ 472 X (4.7 k)	T	41/21.7
R307	7030005050	S.RES ERJ2GEJ 103 X (10 k)	B	27/63
R309	7030005070	S.RES ERJ2GEJ 683 X (68 k)	T	89.9/7.2
R310	7030004980	S.RES ERJ2GEJ 101 X (100)	B	109.3/62.8
R311	7030000220	S.RES MCR10EZHJ 47 (470)	B	15/76.9
R312	7030005700	S.RES ERJ2GEJ 274 X (270 k)	B	31.5/62.4
R313	7030003370	S.RES ERJ3GEYJ 271 V (270)	B	8.6/54
R314	7030005600	S.RES ERJ2GEJ 273 X (27 k)	B	3/53
R315	7030000220	S.RES MCR10EZHJ 47 (470)	B	3.5/57.4
R316	7030005170	S.RES ERJ2GEJ 474 X (470 k)	T	90.8/11.3
R317	7030005160	S.RES ERJ2GEJ 105 X (1 M)	B	108.3/83.7
R318	7030005160	S.RES ERJ2GEJ 105 X (1 M)	B	112.5/82.7
R319	7030005120	S.RES ERJ2GEJ 102 X (1 k)	B	112.1/81.5
R320	7030005160	S.RES ERJ2GEJ 105 X (1 M)	B	107.2/82.4
R321	7030004970	S.RES ERJ2GEJ 470 X (47)	B	108.4/82
R322	7030005600	S.RES ERJ2GEJ 273 X (27 k)	B	2.1/79.2
R323	7030003370	S.RES ERJ3GEYJ 271 V (270)	B	6.3/78.7
R324	7030000620	S.RES MCR10EZHJ 100 k	B	5.6/85.5
R325	7030005050	S.RES ERJ2GEJ 103 X (10 k)	B	130.5/45.2
R326	7030005090	S.RES ERJ2GEJ 104 X (100 k)	B	131.8/51.7

[MAIN UNIT]

REF NO.	ORDER NO.	DESCRIPTION	M.	H/V LOCATION
R327	7030007290	S.RES ERJ2GEJ 222 X (2.2 k)	B	131.1/54.2
R328	7030005090	S.RES ERJ2GEJ 104 X (100 k)	B	134.2/51.7
R331	7030005090	S.RES ERJ2GEJ 104 X (100 k)	T	110.1/21.6
R332	7030005090	S.RES ERJ2GEJ 104 X (100 k)	T	109.6/27.9
R333	7030005120	S.RES ERJ2GEJ 102 X (1 k)	T	109.6/26.9
R334	7030000100	S.RES MCR10EZHJ 4.7 (4R7)	T	101.4/79.7
R335	7030005050	S.RES ERJ2GEJ 103 X (10 k)	T	101.8/83.9
R336	7030005120	S.RES ERJ2GEJ 102 X (1 k)	T	111.3/78.5
R337	7410001130	S.ARY EXB28V102JX	T	104.6/75.9
R338	7030005651	S.RES ERA3YKD 304V (300 k)	T	113.6/54.3
R339	7030005871	S.RES ERA3YKD 104V (100 k)	T	113.6/52.9
R340	7030003560	S.RES ERJ3GEYJ 103 V (10 k)	T	136.3/65.7
R341	7030003560	S.RES ERJ3GEYJ 103 V (10 k)	B	130.7/85.9
R342	7030005090	S.RES ERJ2GEJ 104 X (100 k)	B	135.4/52.2
R343	7030007290	S.RES ERJ2GEJ 222 X (2.2 k)	B	138.2/49.4
R344	7030005110	S.RES ERJ2GEJ 224 X (220 k)	B	133.3/54.6
R345	7030005110	S.RES ERJ2GEJ 224 X (220 k)	B	133.3/56.3
R346	7030008410	S.RES ERJ2GEJ 392 X (3.9 k)	B	137/52.2
R347	7030005050	S.RES ERJ2GEJ 103 X (10 k)	B	137.8/53.7
R348	7030005700	S.RES ERJ2GEJ 274 X (270 k)	B	129.1/77.2
R349	7030005090	S.RES ERJ2GEJ 104 X (100 k)	B	127.8/77.7
R350	7030005120	S.RES ERJ2GEJ 102 X (1 k)	B	139.1/47.8
R351	7030004980	S.RES ERJ2GEJ 101 X (100)	B	136.3/38.1
R352	7030008300	S.RES ERJ2GEJ 184 X (180 k)	B	139.7/39
R353	7030005230	S.RES ERJ2GEJ 334 X (330 k)	B	138.2/47.8
R354	7030010040	S.RES ERJ2GEJ-JPW	T	140.4/36
R355	7030008280	S.RES ERJ2GEJ 271 X (270)	B	139.7/34.3
R356	7540000290	ABS ERZV10D220		
R359	7030005090	S.RES ERJ2GEJ 104 X (100 k)	B	114.8/82.9
R360	7030005090	S.RES ERJ2GEJ 104 X (100 k)	T	80.6/5.3
R361	7030005600	S.RES ERJ2GEJ 273 X (27 k)	T	78.4/5.3
R362	7030005050	S.RES ERJ2GEJ 103 X (10 k)	T	124.8/50.2
R363	7030005120	S.RES ERJ2GEJ 102 X (1 k)	T	42.9/38.3
R364	7030009140	S.RES ERJ2GEJ 272 X (2.7 k)	T	42.9/37.4
R365	7030004970	S.RES ERJ2GEJ 470 X (47)	T	38.3/37.9
R366	7030005050	S.RES ERJ2GEJ 103 X (10 k)	B	131.4/63.4
R367	7030005000	S.RES ERJ2GEJ 471 X (470)	B	130.1/63
R368	7030005050	S.RES ERJ2GEJ 103 X (10 k)	T	78.3/7.6
R370	7030005010	S.RES ERJ2GEJ 681 X (680)	T	71.2/70.4
R371	7030005050	S.RES ERJ2GEJ 103 X (10 k)	T	119.5/84.6
R372	7030005040	S.RES ERJ2GEJ 472 X (4.7 k)	T	25.9/8.1
R373	7030005040	S.RES ERJ2GEJ 472 X (4.7 k)	T	74/21.6
R375	7030005030	S.RES ERJ2GEJ 152 X (1.5 k)	T	27.6/5.3
R376	7030005160	S.RES ERJ2GEJ 105 X (1 M)	B	109.1/12.1
R377	7030005160	S.RES ERJ2GEJ 105 X (1 M)	B	110.9/12.1
R378	7410001140	S.ARY EXB28V104JX	B	100.7/18.3
R379	7030005090	S.RES ERJ2GEJ 104 X (100 k)	T	111.6/23.8
R386	7030005120	S.RES ERJ2GEJ 102 X (1 k)	T	105.8/85.1
R387	7030005120	S.RES ERJ2GEJ 102 X (1 k)	T	107.8/85.1
C1	4030017420	S.CER ECJ0EC1H470J	T	88.9/54.3
C2	4030017420	S.CER ECJ0EC1H470J	T	89.9/54.3
C3	4030017420	S.CER ECJ0EC1H470J	T	41.5/15.4
C4	4030017420	S.CER ECJ0EC1H470J	B	50/15
C5	4030017460	S.CER ECJ0EB1E102K	T	89.4/34
C6	4550007080	S.TAN TEESVA 1C 106M8R	T	80.8/55.1
C7	4030017420	S.CER ECJ0EC1H470J	T	84/18.4
C8	4030017420	S.CER ECJ0EC1H470J	T	89.9/52
C9	4030016930	S.CER ECJ0EB1A104K	T	88.9/52
C10	4030016930	S.CER ECJ0EB1A104K	T	80.6/50.7
C11	4030016930	S.CER ECJ0EB1A104K	T	10.9/18.8
C12	4030016930	S.CER ECJ0EB1A104K	T	8.5/7.4
C13	4030016930	S.CER ECJ0EB1A104K	T	85.6/10
C14	4030016930	S.CER ECJ0EB1A104K	T	86.6/10
C15	4030017460	S.CER ECJ0EB1E102K	T	41.5/7.7
C16	4550000460	S.TAN TEESVA 1C 105M8R	T	42.7/6.2
C17	4550000460	S.TAN TEESVA 1C 105M8R	B	42.7/6.2
C18	4030017420	S.CER ECJ0EC1H470J	T	41.5/14.5
C19	4030017420	S.CER ECJ0EC1H470J	B	50/15.9
C20	4030016970	S.CER ECJ0EB1C223K	B	100.9/52.3
C21	4030017420	S.CER ECJ0EC1H470J	T	41.5/13.5
C22	4030017420	S.CER ECJ0EC1H470J	T	41.5/12.6
C23	4030016930	S.CER ECJ0EB1A104K	T	51.8/5.6
C24	4030017420	S.CER ECJ0EC1H470J	B	39.8/9.8
C25	4030017420	S.CER ECJ0EC1H470J	T	61.4/6
C26	4030016930	S.CER ECJ0EB1A104K	B	37.2/5.8
C27	4030017760	S.CER ECJ0EB1H222K	B	36.3/7.5
C28	4030016930	S.CER ECJ0EB1A104K	T	79.3/7.6
C29	4030017460	S.CER ECJ0EB1E102K	T	79/13.6
C30	4030016930	S.CER ECJ0EB1A104K	T	78.1/13.6
C31	4030017460	S.CER ECJ0EB1E102K	T	80.6/51.7
C32	4030017500	S.CER ECJ0EC1H560J	B	33.3/15.9
C33	4030016930	S.CER ECJ0EB1A104K	B	34.8/12.8
C34	4030017570	S.CER ECJ0EC1H040B	B	32.1/15.4
C35	4030017590	S.CER ECJ0EC1H070C	B	30.9/15.9
C36	4030016930	S.CER ECJ0EB1A104K	T	22.4/14.9
C37	4030017360	S.CER ECJ0EC1H030B	B	28.3/15.4
C38	4030016930	S.CER ECJ0EB1A104K	T	22/6.2
C39	4030016930	S.CER ECJ0EB1A104K	B	13.6/6.2
C40	4030016930	S.CER ECJ0EB1A104K	T	23.8/6.2
C41	4030016930	S.CER ECJ0EB1A104K	T	22/12.5
C42	4030016930	S.CER ECJ0EB1A104K	T	23/12.5
C43	4030017430	S.CER ECJ0EC1H101J	T	26.4/9.4
C44	4030017430	S.CER ECJ0EC1H101J	T	25.5/9.4
C45	4030017790	S.CER ECJ0EB1E682K	B	91.7/10
C46	4030016930	S.CER ECJ0EB1A104K	B	93.8/10
C47	4030016970	S.CER ECJ0EB1C223K	T	92.1/15.1
C48	4030017710	S.CER ECJ0EC1H181J	B	49.7/9.1
C49	4550007080	S.TAN TEESVA 1C 106M8R	T	52.1/15.4
C50	4030017460	S.CER ECJ0EB1E102K	T	54.3/12
C51	4030017400	S.CER ECJ0EC1H220J	T	47.8/19
C52	4030017400	S.CER ECJ0EC1H220J	T	44.7/7.8
C53	4030017900	S.CER ECJ0EB1C123K	T	59.1/10.6

M.=Mounted side (T: Mounted on the Top side, B: Mounted on the Bottom side)
S.=Surface mount

[MAIN UNIT]

REF NO.	ORDER NO.	DESCRIPTION	M.	H/V LOCATION
C54	4030018080	S.CER ECJ0EB1H182K	T	59.1/11.5
C55	4030016790	S.CER ECJ0EB1C103K	T	64.5/57
C56	4030017620	S.CER ECJ0EC1H100C	T	87.7/35.5
C57	4030016930	S.CER ECJ0EB1A104K	T	80.1/36.7
C58	4030017430	S.CER ECJ0EC1H101J	T	85.2/38.6
C59	4030017460	S.CER ECJ0EB1E102K	T	81.8/24.3
C60	4030017420	S.CER ECJ0EC1H470J	T	82.9/41.5
C63	4030017620	S.CER ECJ0EC1H100C	T	84/39.1
C64	4030017780	S.CER ECJ0EB1E472K	T	81.3/41.3
C65	4030017460	S.CER ECJ0EB1E102K	T	27.6/10.6
C66	4550006050	S.TAN TEESVA 0J 106M8R	T	31.1/6.8
C67	4030017460	S.CER ECJ0EB1E102K	T	27.6/7.1
C68	4030017460	S.CER ECJ0EB1E102K	T	30.5/9
C69	4030017460	S.CER ECJ0EB1E102K	T	32.6/15.4
C70	4030017420	S.CER ECJ0EC1H470J	B	28.3/13.4
C71	4030016940	S.CER ECJ0EB1A393K	B	91.7/8.3
C72	4030018860	S.CER ECJ0EB0J105K	B	50.7/11
C73	4030017750	S.CER ECJ0EB1E122K	B	51.3/16.6
C74	4030016930	S.CER ECJ0EB1A104K	B	52.3/16.6
C75	4030016930	S.CER ECJ0EB1A104K	B	56.2/12.6
C77	4030017460	S.CER ECJ0EB1E102K	B	54.2/16.6
C78	4030017460	S.CER ECJ0EB1E102K	B	53.7/9
C79	4550007080	S.TAN TEESVA 1C 106M8R	T	66.5/55.3
C80	4030017780	S.CER ECJ0EB1E472K	B	79.2/35
C81	4550000460	S.TAN TEESVA 1C 105M8R	B	82.2/36.4
C82	4030017460	S.CER ECJ0EB1E102K	B	84.1/26.9
C83	4550000460	S.TAN TEESVA 1C 105M8R	B	84/32.5
C84	4030017460	S.CER ECJ0EB1E102K	T	78.2/48.8
C85	4030017380	S.CER ECJ0EC1H050B	B	77.1/47.2
C86	4030017350	S.CER ECJ0EC1H020B	B	74.8/48.3
C87	4030017580	S.CER ECJ0EC1H060C	B	73.7/48.3
C88	4030017380	S.CER ECJ0EC1H050B	B	72.4/48.6
C89	4030017580	S.CER ECJ0EC1H060C	B	71.1/49.1
C90	4030017350	S.CER ECJ0EC1H020B	B	70/49.1
C91	4030016790	S.CER ECJ0EB1C103K	T	27.3/17.3
C92	4030017460	S.CER ECJ0EB1E102K	T	25.2/22.4
C93	4030017680	S.CER ECJ0EC1H820J	T	32.6/12.6
C94	4030017460	S.CER ECJ0EB1E102K	B	27.8/12.5
C95	4030016790	S.CER ECJ0EB1C103K	T	28.9/20.1
C96	4030016930	S.CER ECJ0EB1A104K	B	32.8/8.1
C97	4030016930	S.CER ECJ0EB1A104K	B	29.6/9
C98	4030016930	S.CER ECJ0EB1A104K	B	89.3/7.3
C99	4030016930	S.CER ECJ0EB1A104K	B	90.7/14.8
C100	4030016930	S.CER ECJ0EB1A104K	T	87.3/14.3
C101	4030017710	S.CER ECJ0EC1H181J	T	83.9/7.2
C102	4030016930	S.CER ECJ0EB1A104K	T	108/32.8
C103	4030016930	S.CER ECJ0EB1A104K	B	55.3/19.3
C104	4550003250	S.TAN TEESVA 1V 474M8R	B	67.2/24.2
C105	4030017420	S.CER ECJ0EC1H470J	T	49.2/29.9
C106	4030017460	S.CER ECJ0EB1E102K	B	78/29.1
C107	4030016930	S.CER ECJ0EB1A104K	B	54.2/28.8
C109	4550006480	S.TAN TEESVA 1C 475M8R	B	56.1/27.7
C110	4030017420	S.CER ECJ0EC1H470J	T	60.2/27.3
C111	4030016930	S.CER ECJ0EB1A104K	B	66.3/30.3
C112	4030017460	S.CER ECJ0EB1E102K	B	67.4/30.3
C113	4030017420	S.CER ECJ0EC1H470J	T	72.1/26.6
C114	4030016790	S.CER ECJ0EB1C103K	T	24.3/22.4
C115	4030016790	S.CER ECJ0EB1C103K	T	23/21.2
C116	4030016790	S.CER ECJ0EB1C103K	T	28.5/22.6
C118	4030017640	S.CER ECJ0EC1H150J	T	20.5/28.7
C120	4030016790	S.CER ECJ0EB1C103K	T	32.6/22.5
C121	4030017570	S.CER ECJ0EC1H040B	T	34.8/23.5
C122	4030017390	S.CER ECJ0EC1H180J	T	39.8/28.9
C124	4030016930	S.CER ECJ0EB1A104K	B	90.3/18.9
C125	4030017460	S.CER ECJ0EB1E102K	B	128.5/52.6
C126	4030016930	S.CER ECJ0EB1A104K	T	79.6/20.6
C127	4030016930	S.CER ECJ0EB1A104K	B	82.8/20.1
C128	4030016930	S.CER ECJ0EB1A104K	T	78.4/19.3
C129	4030016930	S.CER ECJ0EB1A104K	B	63.7/16.4
C130	4030016930	S.CER ECJ0EB1A104K	B	135.6/25.4
C131	4030017660	S.CER ECJ0EC1H330J	T	135.9/25.7
C132	4030017660	S.CER ECJ0EC1H330J	T	135.9/18
C133	4030017420	S.CER ECJ0EC1H470J	T	48.1/35.5
C134	4030017620	S.CER ECJ0EC1H100C	T	49.4/34.8
C135	4030017660	S.CER ECJ0EC1H330J	T	64.1/32.5
C136	4030017340	S.CER ECJ0EC1H010B	T	71.1/30.8
C137	4030017570	S.CER ECJ0EC1H040B	T	71.1/29.9
C138	4030017730	S.CER ECJ0EB1E471K	T	71.9/33
C139	4030017630	S.CER ECJ0EC1H120J	T	62.1/32
C140	4030017360	S.CER ECJ0EC1H030B	T	72.5/30.7
C141	4030017360	S.CER ECJ0EC1H030B	T	72.1/29
C142	4030018860	S.CER ECJ0EB0J105K	T	89.5/12.7
C143	4030017400	S.CER ECJ0EC1H220J	T	71.3/36.6
C145	4030016790	S.CER ECJ0EB1C103K	T	31.4/35.2
C147	4030016790	S.CER ECJ0EB1C103K	T	34.5/35.2
C148	4030016790	S.CER ECJ0EB1C103K	T	30.9/26.4
C149	4030016930	S.CER ECJ0EB1A104K	B	78.2/17.4
C150	4030018560	S.CER C2012 JB 1A 475K-T	B	86.9/19.8
C151	4030016930	S.CER ECJ0EB1A104K	T	112.1/46
C152	4030016930	S.CER ECJ0EB1A104K	T	109.6/34.3
C153	4030017460	S.CER ECJ0EB1E102K	T	111.4/34.3
C154	4030018860	S.CER ECJ0EB0J105K	T	82.7/19.8
C155	4030017420	S.CER ECJ0EC1H470J	T	110.3/38.7
C156	4030017910	S.CER ECJ0EB1H152K	T	104.9/42.3
C157	4030017420	S.CER ECJ0EC1H470J	T	110.8/48.6
C158	4030017430	S.CER ECJ0EC1H101J	T	110.3/37.8
C159	4030017460	S.CER ECJ0EB1E102K	T	120.3/5.5
C160	4030017460	S.CER ECJ0EB1E102K	B	130.6/25.4
C161	4030017660	S.CER ECJ0EC1H330J	T	50.8/43.8
C162	4030017560	S.CER ECJ0EC1H2R5B	T	52.1/43.4
C163	4030017650	S.CER ECJ0EC1H270J	T	58.7/39.4
C164	4030017390	S.CER ECJ0EC1H180J	T	48.6/45.8
C165	4030017390	S.CER ECJ0EC1H180J	T	49.9/45.4
C166	4030017580	S.CER ECJ0EC1H060C	T	60.1/38.9

[MAIN UNIT]

REF NO.	ORDER NO.	DESCRIPTION	M.	H/V LOCATION
C167	4030017420	S.CER ECJ0EC1H470J	T	70/38.9
C168	4030017660	S.CER ECJ0EC1H330J	T	59.1/40.8
C169	4030017670	S.CER ECJ0EC1H390J	T	60.7/40.4
C170	4030017550	S.CER ECJ0EC1H1R5B	T	70.4/36.6
C171	4030017570	S.CER ECJ0EC1H040B	T	70/37.9
C172	4030017400	S.CER ECJ0EC1H220J	T	70/42.9
C173	4030017400	S.CER ECJ0EC1H220J	T	70/43.9
C174	4030017640	S.CER ECJ0EC1H150J	T	38.3/38.8
C175	4030016790	S.CER ECJ0EB1C103K	B	41.4/39.4
C176	4030016930	S.CER ECJ0EB1A104K	B	41/33.2
C177	4030017730	S.CER ECJ0EB1E471K	B	41/32.2
C178	4030016790	S.CER ECJ0EB1C103K	B	34.5/33
C180	4030017740	S.CER ECJ0EB1E821K	T	109.2/48.6
C181	4030016930	S.CER ECJ0EB1A104K	T	112.1/43.2
C182	4030016780	S.CER ECJ0EB1C153K	T	112.1/39.6
C183	4030017420	S.CER ECJ0EC1H470J	T	104.9/45
C184	4030017760	S.CER ECJ0EB1H222K	T	104.9/45.9
C185	4030017690	S.CER ECJ0EC1H121J	T	107.8/48.6
C186	4030016790	S.CER ECJ0EB1C103K	T	51.7/45.4
C187	4030017460	S.CER ECJ0EB1E102K	T	52.6/45.4
C188	4030016790	S.CER ECJ0EB1C103K	T	62.7/40.4
C189	4030017460	S.CER ECJ0EB1E102K	T	63.7/40.4
C190	4030017540	S.CER ECJ0EC1HR75B	T	55/48.3
C191	4030016790	S.CER ECJ0EB1C103K	T	70/40.9
C192	4030017540	S.CER ECJ0EC1HR75B	T	57.7/43
C193	4030017460	S.CER ECJ0EB1E102K	T	70/39.9
C194	4030017530	S.CER ECJ0EC1H0R5B	T	60/44.4
C195	4030016930	S.CER ECJ0EB1A104K	B	39/30
C196	4030017730	S.CER ECJ0EB1E471K	B	38.1/33.2
C197	4030016930	S.CER ECJ0EB1A104K	B	38.1/32.2
C198	4030017730	S.CER ECJ0EB1E471K	B	31.3/38.3
C199	4030016930	S.CER ECJ0EB1A104K	B	31.3/39.2
C200	4030016930	S.CER ECJ0EB1A104K	B	31.3/34
C201	4030017730	S.CER ECJ0EB1E471K	B	31.3/33.1
C202	4030017460	S.CER ECJ0EB1E102K	T	112.1/38.7
C203	4030017460	S.CER ECJ0EB1E102K	B	100.9/47
C205	4030018900	S.CER ECJ0EB0J474K	T	78.4/18.4
C206	4030016930	S.CER ECJ0EB1A104K	T	78.5/16.7
C207	4030017730	S.CER ECJ0EB1E471K	T	61/45.7
C208	4030017460	S.CER ECJ0EB1E102K	T	60/45.7
C209	4030017460	S.CER ECJ0EB1E102K	B	65/52.7
C210	4030017590	S.CER ECJ0EC1H070C	B	57.6/50.3
C211	4030017620	S.CER ECJ0EC1H100C	B	60/51.4
C212	4030017460	S.CER ECJ0EB1E102K	B	63.8/50.8
C213	4030017460	S.CER ECJ0EB1E102K	B	55.6/36.6
C214	4030017460	S.CER ECJ0EB1E102K	B	66.8/41.3
C215	4030017390	S.CER ECJ0EC1H180J	B	38.5/47.6
C216	4030017660	S.CER ECJ0EC1H330J	B	43.1/47.6
C217	4030017730	S.CER ECJ0EB1E471K	B	25/32.7
C218	4030016930	S.CER ECJ0EB1A104K	B	25/31.7
C219	4030017650	S.CER ECJ0EC1H270J	B	22.9/36.4
C220	4030017600	S.CER ECJ0EC1H080C	B	22.4/37.7
C221	4030016930	S.CER ECJ0EB1A104K	B	5.6/23.2
C222	4030017030	S.CER ECJ0EB1A273K	B	128.6/45.3
C223	4030016930	S.CER ECJ0EB1A104K	B	126.3/48.2
C224	4030017640	S.CER ECJ0EC1H150J	T	124.2/40.1
C225	4030016790	S.CER ECJ0EB1C103K	T	124.2/37.4
C226	4030017580	S.CER ECJ0EC1H060C	T	124.2/41.1
C227	4030017460	S.CER ECJ0EB1E102K	B	57.6/53.5
C228	4030017460	S.CER ECJ0EB1E102K	B	56.4/53.1
C229	4030017620	S.CER ECJ0EC1H100C	B	52.1/53.1
C230	4030017460	S.CER ECJ0EB1E102K	B	63.5/62.3
C231	4030017360	S.CER ECJ0EC1H030B	B	66.3/52.2
C232	4030017460	S.CER ECJ0EB1E102K	B	68.6/49.5
C234	4030017390	S.CER ECJ0EC1H180J		
		[EXP-01], [EUR-01] only	B	52.1/54
C235	4030017460	S.CER ECJ0EB1E102K	B	44.4/50.7
C236	4030017390	S.CER ECJ0EC1H180J	B	47.8/48.1
C237	4030017620	S.CER ECJ0EC1H100C	B	47.4/49.4
C240	4030017460	S.CER ECJ0EB1E102K	B	18.9/34.4
C241	4030017360	S.CER ECJ0EC1H030B	B	17/37.7
C242	4030017460	S.CER ECJ0EB1E102K	B	15/34.4
C243	4030017460	S.CER ECJ0EB1E102K	B	18.9/33.5
C244	4030017460	S.CER ECJ0EB1E102K	B	15.7/31.7
C245	4550006780	S.TAN TEESVB2 0J 476M8R	B	5.6/18.7
C246	4030016930	S.CER ECJ0EB1A104K	B	105.1/52.2
C247	4030016930	S.CER ECJ0EB1A104K	B	107/52.9
C248	4030016930	S.CER ECJ0EB1A104K	B	108.1/52
C249	4030018900	S.CER ECJ0EB0J474K	B	121.8/47.4
C250	4030017630	S.CER ECJ0EC1H120J	T	120.4/40.1
C251	4030017400	S.CER ECJ0EC1H220J	B	61.9/64.2
C252	4030017420	S.CER ECJ0EC1H470J	B	62.6/71.1
C253	4030017730	S.CER ECJ0EB1E471K	B	61.6/71.1
C254	4030017420	S.CER ECJ0EC1H470J	B	63.9/69.5
C255	4030017390	S.CER ECJ0EC1H180J		
		[EXP-01], [EUR-01] only	B	61.9/63.2
C256	4030017460	S.CER ECJ0EB1E102K	B	59.7/65.5
C257	4030017460	S.CER ECJ0EB1E102K	B	63.4/67.4
C258	4030017460	S.CER ECJ0EB1E102K	T	13.9/32.5
C259	4030017460	S.CER ECJ0EB1E102K	T	10/35
C260	4030017620	S.CER ECJ0EC1H100C	B	14.2/36.3
C261	4030017460	S.CER ECJ0EB1E102K	B	11/35.3
C262	4030017460	S.CER ECJ0EB1E102K	B	14.3/37.7
C263	4030017490	S.CER C1608 JB 1A 105K-T	T	14.1/33.7
C264	4030017350	S.CER ECJ0EC1H020B	B	8.4/38.6
C265	4030017420	S.CER ECJ0EC1H470J	B	8.6/36.3
C266	4030017460	S.CER ECJ0EB1E102K	B	9.5/36.3
C267	4030017460	S.CER ECJ0EB1E102K	B	63.9/70.5
C268	4030017640	S.CER ECJ0EC1H150J	B	68.2/69.1
C269	4030017390	S.CER ECJ0EC1H180J [USA-01]	B	69.7/69.1
	4030017650	S.CER ECJ0EC1H270J		
		[EXP-01], [EUR-01]	B	69.7/69.1
C270	4030017390	S.CER ECJ0EC1H180J	B	71.2/69

M.=Mounted side (T: Mounted on the Top side, B: Mounted on the Bottom side)
S.=Surface mount

[MAIN UNIT]

REF NO.	ORDER NO.	DESCRIPTION	M.	H/V LOCATION
C271	4030017390	S.CER ECJ0EC1H180J [EXP-01], [EUR-01]	T	74.3/71.7
	4030017400	S.CER ECJ0EC1H220J [USA-01]	T	74.3/71.7
C272	4030016930	S.CER ECJ0EB1A104K	T	7.9/39.5
C273	4030016930	S.CER ECJ0EB1A104K	T	9.5/39.5
C274	4030017460	S.CER ECJ0EB1E102K	T	7.4/41.2
C275	4030016930	S.CER ECJ0EB1A104K	T	15/41
C276	4030017620	S.CER ECJ0EC1H100C	B	8.9/40.4
C277	4030017460	S.CER ECJ0EB1E102K	T	14/41
C278	4030017350	S.CER ECJ0EC1H020B	B	8.9/43.6
C279	4030017460	S.CER ECJ0EB1E102K	B	6.9/44.2
C280	4030017550	S.CER ECJ0EC1H1R5B	B	9.4/46.1
C281	4030017420	S.CER ECJ0EC1H470J	T	97.9/34.2
C282	4030017420	S.CER ECJ0EC1H470J	T	102.1/40
C283	4030017420	S.CER ECJ0EC1H470J	B	97.4/44.6
C284	4030017420	S.CER ECJ0EC1H470J	T	94.8/35.5
C285	4030017420	S.CER ECJ0EC1H470J	B	94.2/44.4
C286	4030017420	S.CER ECJ0EC1H470J	T	92.1/43.3
C287	4030017420	S.CER ECJ0EC1H470J	T	92.1/41.6
C288	4030017460	S.CER ECJ0EB1E102K	B	4.8/46.5
C290	4030017400	S.CER ECJ0EC1H220J	T	74.3/73.6
C291	4030017730	S.CER ECJ0EB1E471K	T	69.3/76.1
C292	4550000560	S.TAN TEESVA 1V 334M8R	T	67.6/74.4
C293	4030017400	S.CER ECJ0EC1H220J [EXP-01], [EUR-01] only		
C294	4030017420	S.CER ECJ0EC1H470J	T	70.4/76.1
C295	4030017420	S.CER ECJ0EC1H470J	T	56.7/67.3
C296	4510008530	S.ELE EEE1HA2R2SR	T	59.6/80
C297	4030017460	S.CER ECJ0EB1E102K	T	56.7/68.3
C299	4030017460	S.CER ECJ0EB1E102K	B	6.9/47.9
C300	4030017340	S.CER ECJ0EC1H010B	B	8.9/48.5
C301	4030017580	S.CER ECJ0EC1H060C	B	11.3/50.5
C302	4030017460	S.CER ECJ0EB1E102K	B	4.4/44.4
C303	4030016930	S.CER ECJ0EB1A104K	B	129.6/32
C304	4030017420	S.CER ECJ0EC1H470J	B	90/43.4
C305	4030011140	S.CER GRM31M2C2H120JV01L	T	27.6/78.7
C306	4030011120	S.CER GRM31M2C2H100JV01L	T	27.6/76.1
C307	4030011120	S.CER GRM31M2C2H100JV01L	T	27.7/71.8
C308	4030011070	S.CER GRM31M2C2H5R0CY21L) [USA-01]	T	27.7/69.2
	4030011140	S.CER GRM31M2C2H120JV01L [EXP-01], [EUR-01]	T	27.7/69.2
C309	4030017460	S.CER ECJ0EB1E102K	T	71.5/76.1
C310	4030017420	S.CER ECJ0EC1H470J	T	43/76.1
C311	4030017460	S.CER ECJ0EB1E102K	T	44.1/76.1
C312	4030017730	S.CER ECJ0EB1E471K	T	45.3/76.1
C313	4510008680	S.ELE EEE1EA220SP	T	51.7/77.7
C314	4030017730	S.CER ECJ0EB1E471K	B	40.2/68.3
C315	4030017460	S.CER ECJ0EB1E102K	T	55.7/73.6
C316	4030016790	S.CER ECJ0EB1C103K	T	54.1/72.6
C317	4030011600	S.CER C1608 JB 1E 104K-T	T	54.1/67
C318	4030017460	S.CER ECJ0EB1E102K [USA-01] only	T	35.1/63.3
C319	4030017460	S.CER ECJ0EB1E102K [USA-01] only	T	47.3/67.4
C320	4030017580	S.CER ECJ0EC1H060C	B	15/52.7
C321	4030017460	S.CER ECJ0EB1E102K	B	14.6/49.3
C322	4030017600	S.CER ECJ0EC1H080C	B	19.3/52
C323	4030017570	S.CER ECJ0EC1H040B	B	20/49.6
C324	4030017420	S.CER ECJ0EC1H470J	B	90/41.8
C325	4030017460	S.CER ECJ0EB1E102K	T	72.5/64.9
C326	4030017420	S.CER ECJ0EC1H470J	B	46.2/64.3
C327	4030017460	S.CER ECJ0EB1E102K	B	84.2/79
C328	4030017460	S.CER ECJ0EB1E102K	B	83.2/79
C329	4030017460	S.CER ECJ0EB1E102K	B	82.1/79
C330	4030017460	S.CER ECJ0EB1E102K	B	81/79
C331	4030017460	S.CER ECJ0EB1E102K	B	80/79
C332	4030016930	S.CER ECJ0EB1A104K	T	51.9/71.9
C334	4030017460	S.CER ECJ0EB1E102K	T	49.5/68.6
C335	4030017460	S.CER ECJ0EB1E102K	T	53.8/63.2
C336	4030017580	S.CER ECJ0EC1H060C	B	20.8/52
C337	4030017390	S.CER ECJ0EC1H180J	B	25.1/51.2
C338	4510008600	S.ELE EEE1CA4R7NR	T	79.1/69.1
C339	4030017460	S.CER ECJ0EB1E102K	T	79.1/62.1
C340	4030017460	S.CER ECJ0EB1E102K	T	37.5/20.8
C341	4030016790	S.CER ECJ0EB1C103K	T	41.9/19.4
C342	4030017200	S.CER GRM31BR32J102KY01L	T	25.3/62.5
C343	4030011270	S.CER GRM31M2C2H200JV01L	T	22.1/63.9
C345	4030011170	S.CER GRM31M2C2H180JV01L	T	17.3/57.4
C346	4030011170	S.CER GRM31M2C2H180JV01L	T	30.2/62.8
C347	4030017520	S.CER ECJ0EC1H0R3B	B	25.4/63
C348	4030017460	S.CER ECJ0EB1E102K	B	31.5/63.4
C349	4030016930	S.CER ECJ0EB1A104K	T	100.5/63.5
C350	4550005980	S.TAN TEESVA 1A 475M8R	T	101.6/62
C351	4030016930	S.CER ECJ0EB1A104K	T	110.6/67.4
C352	4030017460	S.CER ECJ0EB1E102K	B	124.6/59.6
C353	4550005980	S.TAN TEESVA 1A 475M8R	B	124.5/61.3
C354	4550006250	S.TAN TEESVA 1A 106M8R	B	112.9/61.7
C355	4030017420	S.CER ECJ0EC1H470J	B	112.6/60.1
C356	4030011270	S.CER GRM31M2C2H200JV01L	T	14.7/62.9
C357	4030011270	S.CER GRM31M2C2H200JV01L	T	10.4/62.9
C358	4030007030	S.CER C1608 CH 1H 150J-T	B	10.6/56.4
C359	4030011340	S.CER C1608 CH 1H 471J-T	B	9.4/56.4
C360	4030017460	S.CER ECJ0EB1E102K	B	4/53
C361	4030017460	S.CER ECJ0EB1E102K	T	103.9/53.5
C362	4030017460	S.CER ECJ0EB1E102K	T	108.2/24.5
C363	4510008540	S.ELE EEE1CA100SR	T	139.1/31.9
C365	4550007650	S.TAN F931V105MAABMA	B	106.7/65
C366	4550007650	S.TAN F931V105MAABMA	B	104.2/65
C367	4550007650	S.TAN F931V105MAABMA	B	101.6/65
C368	4550007650	S.TAN F931V105MAABMA	B	99.5/64.6
C369	4030011270	S.CER GRM31M2C2H200JV01L	T	15.8/78.9
C370	4030011270	S.CER GRM31M2C2H200JV01L	T	15.8/83.1
C371	4030017460	S.CER ECJ0EB1E102K	B	4.1/81.6
C372	4030006850	S.CER C1608 JB 1H 471K-T	B	8.3/77.1
C373	4030016930	S.CER ECJ0EB1A104K	B	130.9/51.7

[MAIN UNIT]

REF NO.	ORDER NO.	DESCRIPTION	M.	H/V LOCATION
C374	4030016930	S.CER ECJ0EB1A104K	B	133/51.3
C375	4030016930	S.CER ECJ0EB1A104K	B	132.4/54.6
C377	4030017460	S.CER ECJ0EB1E102K	T	105.9/51.9
C378	4030017460	S.CER ECJ0EB1E102K	T	108.2/78
C379	4030016930	S.CER ECJ0EB1A104K	B	108.4/80.3
C380	4030017460	S.CER ECJ0EB1E102K	B	120.5/83.2
C381	4030016790	S.CER ECJ0EB1C103K	B	135.9/70.5
C383	4030017460	S.CER ECJ0EB1E102K	B	135.9/71.5
C384	4510008870	S.ELE EEE1AA471UP	T	129.9/64.9
C386	4030016930	S.CER ECJ0EB1A104K	B	138.8/53.7
C387	4030017720	S.CER ECJ0EB1H331K	B	135.4/51.3
C388	4030018860	S.CER ECJ0EB0J105K	B	138.6/52.2
C389	4030016930	S.CER ECJ0EB1A104K	B	139.1/49.4
C390	4030016930	S.CER ECJ0EB1A104K	B	137.8/55.4
C391	4030016930	S.CER ECJ0EB1A104K	T	101.8/82.3
C392	4030017460	S.CER ECJ0EB1E102K	B	127.8/76.8
C393	4030017460	S.CER ECJ0EB1E102K	B	99/79
C394	4030017420	S.CER ECJ0EC1H470J	B	115.4/68
C395	4030017460	S.CER ECJ0EB1E102K	B	126.5/77.1
C397	4030017460	S.CER ECJ0EB1E102K	B	99.8/86.3
C398	4030017420	S.CER ECJ0EC1H470J	B	100.8/86.3
C399	4030018860	S.CER ECJ0EB0J105K	B	136.3/37.1
C400	4030016930	S.CER ECJ0EB1A104K	B	139.7/35.3
C411	4510008780	S.ELE EEE1EA471P	T	117.2/63.6
C412	4510008780	S.ELE EEE1EA471P	T	132.7/54.3
C413	4030018900	S.CER ECJ0EB0J474K	B	135.1/46.8
C414	4510008540	S.ELE EEE1CA100SR	T	118.7/50.5
C415	4030016930	S.CER ECJ0EB1A104K	B	103/23.8
C416	4030016930	S.CER ECJ0EB1A104K	B	120.3/51.6
C417	4030016790	S.CER ECJ0EB1C103K	B	115.6/52.8
C418	4030017460	S.CER ECJ0EB1E102K	T	109.6/54.5
C419	4030016790	S.CER ECJ0EB1C103K	T	42.9/39.2
C420	4030017500	S.CER ECJ0EC1H560J	T	41/37.4
C421	4030016930	S.CER ECJ0EB1A104K	B	36/24.7
C422	4030016790	S.CER ECJ0EB1C103K	T	43.1/31.9
C423	4030007080	S.CER C1608 CH 1H 390J-T	T	39.9/35.3
C424	4030016930	S.CER ECJ0EB1A104K	T	38.9/32.2
C425	4030017460	S.CER ECJ0EB1E102K	B	134.8/66.1
C426	4030018860	S.CER ECJ0EB0J105K	B	110/12.1
C427	4030017460	S.CER ECJ0EB1E102K	B	109.1/10.4
C430	4030017570	S.CER ECJ0EC1H040B	T	78.2/44.8
J1	6510025220	S.CNR AXK540145J	T	124.5/9.7
J2	6510025220	S.CNR AXK540145J	T	101.5/9.7
J3	6510021301	S.CNR 52365-1071	T	90.3/62.6
J5	6510023091	S.CNR 20FLT-SM2-TB (LF)	T	108.3/81.8
J7	6450000140	CNR HSJ0807-01-010		
J10	6510023091	S.CNR 20FLT-SM2-TB (LF)	T	71/7
W1	7120000470	JMP ERDS2T0		
W2	8900016250	CBL OPC-1701		
EP1	6910015600	S.BEA ACZ1005Y-241 (240)	B	39.8/8.1
EP2	6910015370	S.BEA ACZ1005Y-102-T	B	50.1/12.4
EP3	6910015370	S.BEA ACZ1005Y-102-T	T	82.6/37.1
EP4	6910010280	BEA HF70BB9.5X10.4X4.9		
EP5	6910010280	BEA HF70BB9.5X10.4X4.9		
EP6	6910011560	BEA HF70BB4.5X5X1.6		

[CONNECT UNIT]

REF NO.	ORDER NO.	DESCRIPTION	M.	H/V LOCATION
C601	4030017420	S.CER ECJ0EC1H470J	T	12.7/4.6
C602	4030017420	S.CER ECJ0EC1H470J	T	15.4/4.6
C603	4030017420	S.CER ECJ0EC1H470J	T	18.2/4.6
C604	4030017420	S.CER ECJ0EC1H470J	T	19.6/4.6
C605	4030017420	S.CER ECJ0EC1H470J	T	20.9/4.6
C606	4030017420	S.CER ECJ0EC1H470J	T	25.1/4.6
C607	4030017420	S.CER ECJ0EC1H470J	T	37.5/13.2
C608	4030017420	S.CER ECJ0EC1H470J	T	16.8/4.6
C609	4030017420	S.CER ECJ0EC1H470J	T	40.3/13.2
C610	4030017420	S.CER ECJ0EC1H470J	T	41.7/4.6
J601	6510025240	S.CNR IMSA-9631S-20Y912	B	32.2/16.2
J602	6510023210	CNR CD6125SA1J0 <CVI>		
W601	8900012711	CBL OPC-1297A (P0.5,N20,L62)		

M.=Mounted side (T: Mounted on the Top side, B: Mounted on the Bottom side)
S.=Surface mount

SECTION 8 MECHANICAL PARTS

[CHASSIS PARTS]

REF NO.	ORDER NO.	DESCRIPTION	QTY.
J1	6510004880	MR-DSE-01	1
MP1	8010020540	2979 CHASSIS	1
MP2	8930070860	O-RING (BM)	1
MP3	8110008960	2979 COVER	1
MP4	8930070920	2979 D-SUB PLATE	1
MP5	8510018090	2979 FILTER CASE	1
MP8	8930048550	2177 CLIP	1
MP9	8810008661	Screw BT B0 3X8 NI-ZC3 (BT)	10
MP10	8810008661	Screw BT B0 3X8 NI-ZC3 (BT)	2
MP11	8810008661	Screw BT B0 3X8 NI-ZC3 (BT)	2
MP12	8810009991	Screw BT B0 3X8 NI-ZK3 (BT)	4
MP13	8810009991	Screw BT B0 3X8 NI-ZK3 (BT)	2
MP14	8930071670	2979 M-PLATE	1
MP16	8930068420	SPONGE (IS)	4

[FRONT UNIT]

REF NO.	ORDER NO.	DESCRIPTION	QTY.
J503	6450002210	3017-8821	1
DS501	5030003020	L6-0226TVM-3	1
SP501	2510001400	3050S-E6227	1
W501	8900012711	OPC-1297A	1
W502	7120000470	ERDS2T0	1
W503	7120000470	ERDS2T0	1
EP502	8930072220	SRCN-2979-SP-N-W	2
MP501	8210023480	2979 FRONT PANEL (Incl. MP502)	1
MP502	8310068050	2979 WINDOW PLATE	1
MP503	8210023270	2979 REFLECTOR	1
MP504	8930070840	2979 LENS	1
MP505	8610013020	KNOB N-352	1
MP506	8930070830	2979 KEYBOARD	1
MP507	8930070850	2979 VOL RUBBER	1
MP508	8010020760	2979 SUB CHASSIS (Incl. MP509, MP515)	1
MP509	8930071350	2979 SPRING	1
MP510	8510018080	2979 LCD PLATE	1
MP511	8930071600	INSULATION SHEET (LR)	2
MP513	8930071610	2979 LCD FILTER	1
MP514	8930059000	2601 SP NET	1
MP515	8610007420	knob spring NO.6601	1
MP516	8810010501	Screw BT B0 3X10NI-ZC3 (BT)	3

[MAIN UNIT]

REF NO.	ORDER NO.	DESCRIPTION	QTY.
J7	6450000140	HSJ0807-01-010	1
W1	7120000470	ERDS2T0	1
W2	8900016250	OPC-1701	1
EP4	6910010280	HF70BB9.5X10.4X4.9	1
EP5	6910010280	HF70BB9.5X10.4X4.9	1
EP6	6910011560	HF70BB4.5X5X1.6	2
MP1*	8510018070	2979 VCO CASE	1
MP2	8510018060	2979 VCO COVER	1
MP3	8930056510	2055 SHIELD PLATE	1
MP4	8510002280	VCO Sheild plate (A)	1
MP6	8930072270	Shield sponge (BV)	1

*: Refer to SECTION 10 BOARD LAYOUTS.

[CONNECT UNIT]

REF NO.	ORDER NO.	DESCRIPTION	QTY.
J602	6510023210	CD6125SA1J0	1
W601	8900012711	OPC-1297A	1

[ACCESSORIES]

REF NO.	ORDER NO.	DESCRIPTION	QTY.
MC1	Optional product	HM-148 [USA-01]	1
	Optional product	HM-152 [EXP-01], [EUR-01]	1
W1	Optional product	OPC-1132 [USA-01]	1
	Optional product	OPC-1194A [EXP-01], [EUR-01]	1
W2	8900000730	OPC-049 *	1
MP1	8010020610	2979 MOBILE BRACKET	1
MP2	8820000530	Flange bolt M4X8 NI	4
MP3	8810000471	Screw PH (+-) M5X12 ZC3	4
MP4	8810000951	Screw BT A0 5X16 ZC3	4
MP5	8850000180	Flat washer M5 SUS	4
MP6	8850000391	SPRING WASHER M5 ZC3	4
MP7	8830000121	Nut M5 ZC3	4
MP8	8950005110	2289 MIC HANGER	1
MP10	8310068720	2979 LCD SEAL	1
MP11	8930059160	2601 FELT	2
MP12	8810004700	Screw BT A0 3X16 SUS	2
MP13	8930072530	SPONGE (JN)	2

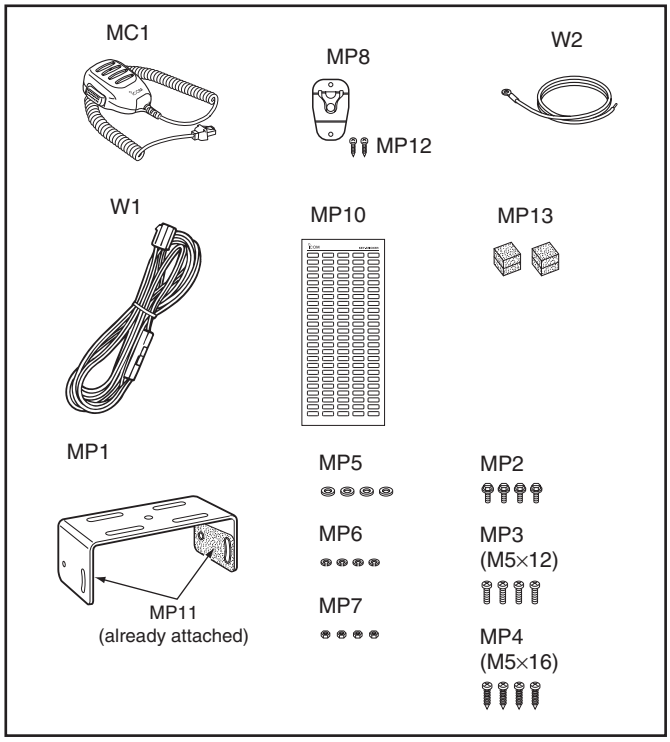

Screw abbreviations A, B0, BT: Self-tapping PH: Pan head ZK: Black NI-ZU: Nickel-Zinc SUS: Stainless

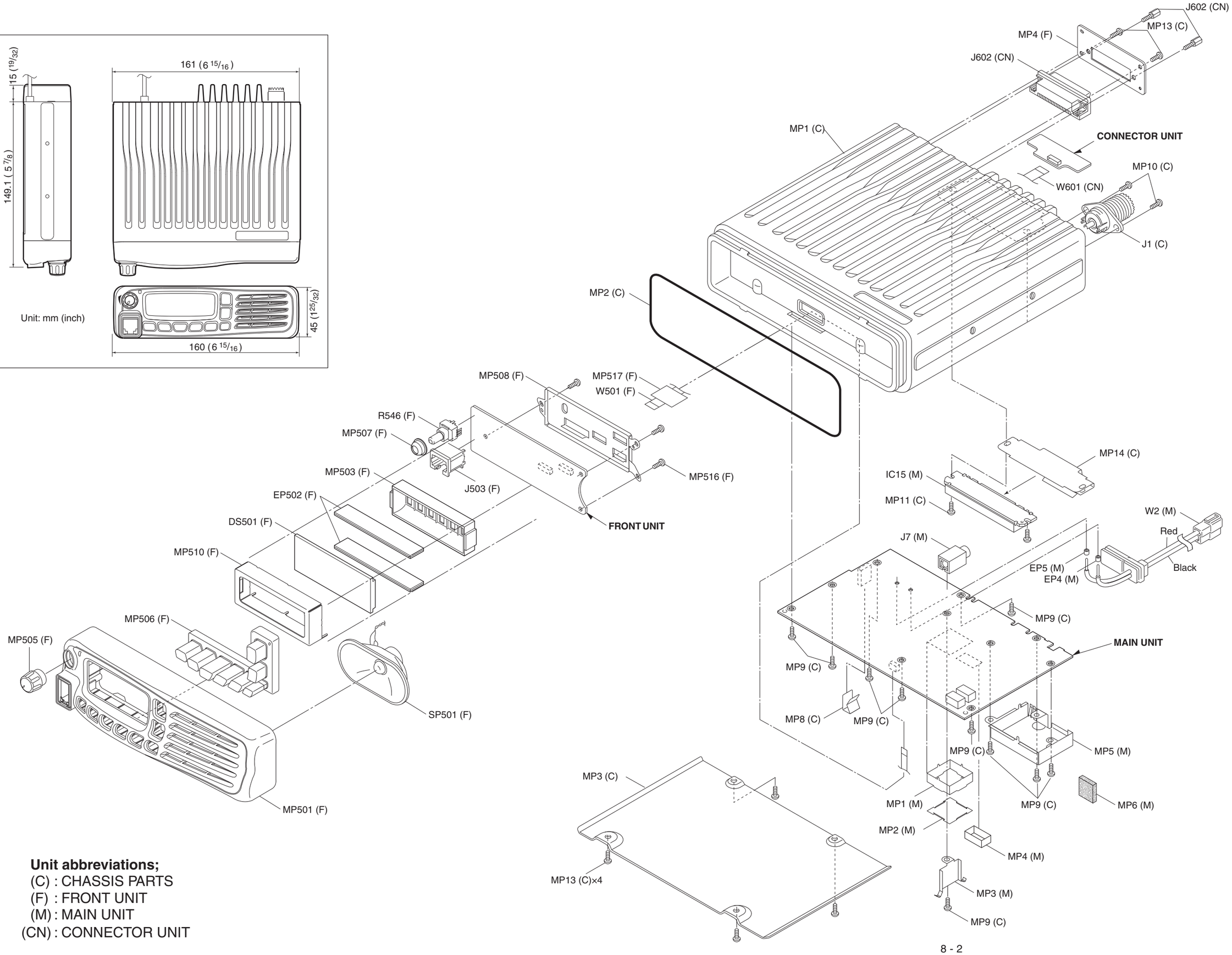

Unit abbreviations;
(C) : CHASSIS PARTS
(F) : FRONT UNIT
(M) : MAIN UNIT
(CN) : CONNECTOR UNIT

SECTION 9 BOARD LAYOUTS

• HM-152 (TOP VIEW)

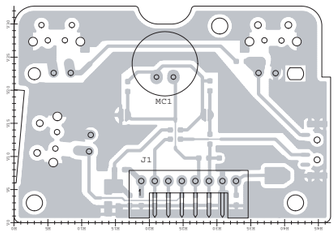

• CONNECT UNIT (TOP VIEW)

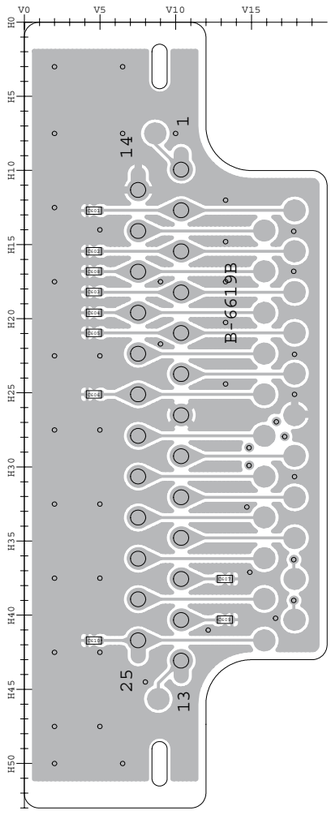

• FRONT UNIT (TOP VIEW)

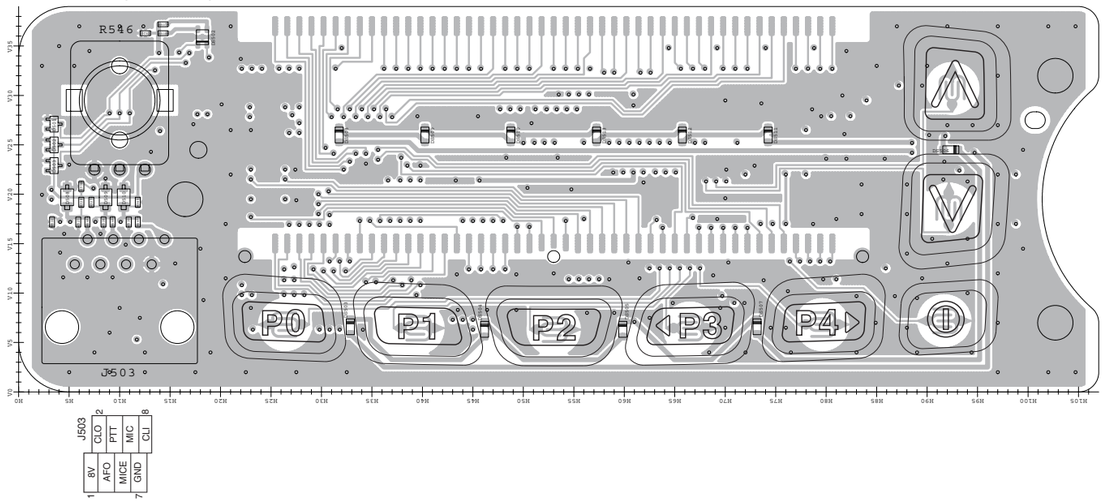

J503	
8V	CLO
AFO	PTT
MICE	MIC
GND	CLI

• MAIN UNIT (TOP VIEW)

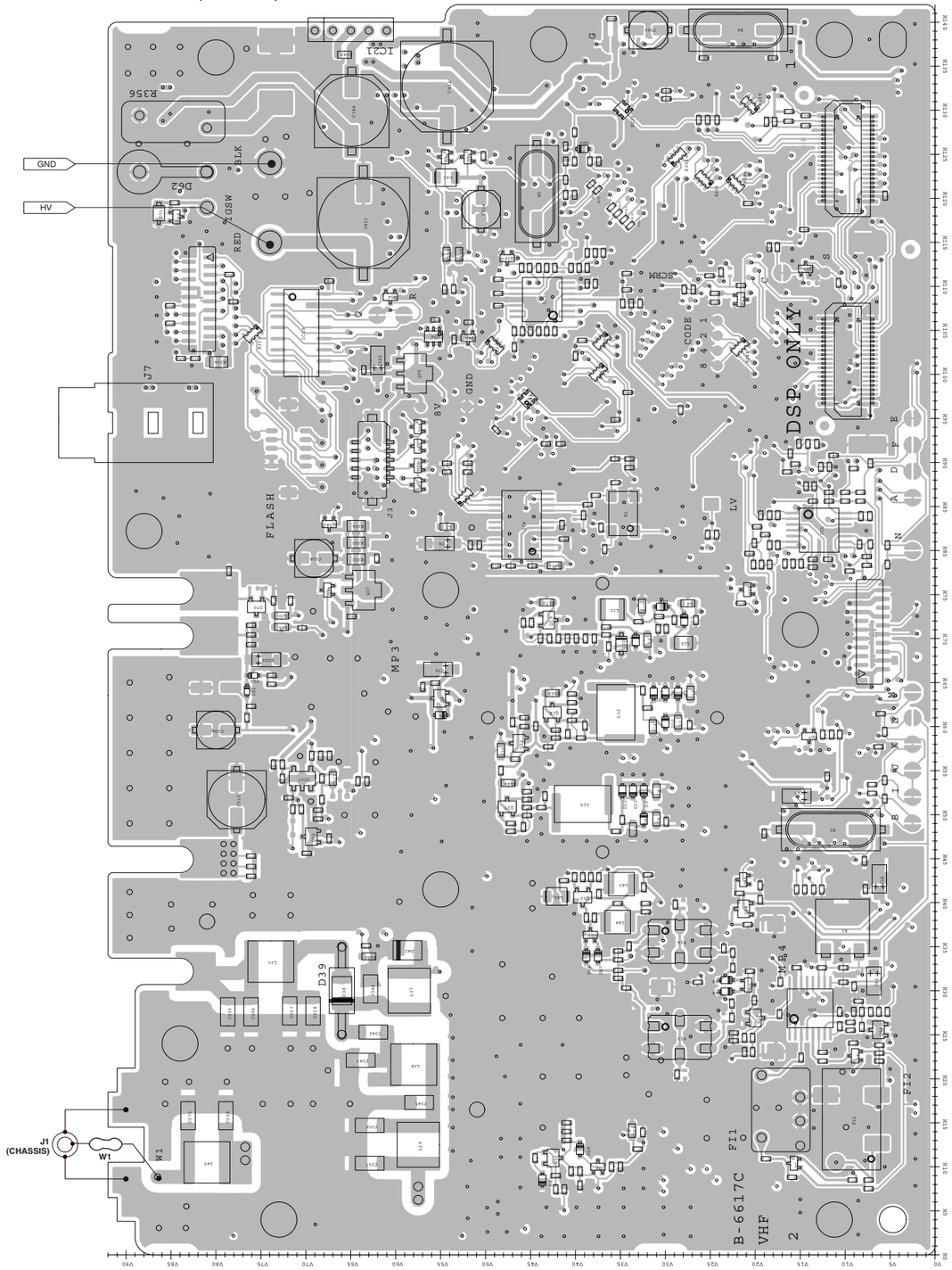

J1		
20	DASW	NC
	PFMF	CCK
	EMPH	CSI
	GND	CSO
	OPT3	NC
	OPT2	CIRQ
	OPT1	CCS
	SIGO	REM
	BUSY	NC
	NC	AFOUT
	NC	DISC
	NC	RMUT
	NC	BEPO
	MCIN	AFON
	NC	MMUTI
	MCOT	NC
	PTTO	VCC
	PTTI	+5V
	GND	GND
1	NC	NC

J2		
20	GND	GND
	GND	CCK
	NC	CSI
	GND	CSO
	OPT3	NC
	OPT2	CIRQ
	OPT1	CCS
	NC	NC
	NC	DAFO
	NC	NC
	VREF	DISC
	NC	NC
	DMI	NC
	NC	NC
	DMO	NC
	NC	NC
	NC	8V
	NC	+5V
	GND	GND
1	D_IF	D_IF

J10		
19	VCC	VCC
	GND	NC
	MFDA	8V
	POSW	FMDA
	MCIN	MICE
	AFO	MICE
	SP-	NC
	NC	SP-
	SP+	SP+
1	GND	GND

The combination of this side and the bottom side shows the board layout in the same configuration as the actual P.C.Board.

• MAIN UNIT (BOTTOM VIEW)

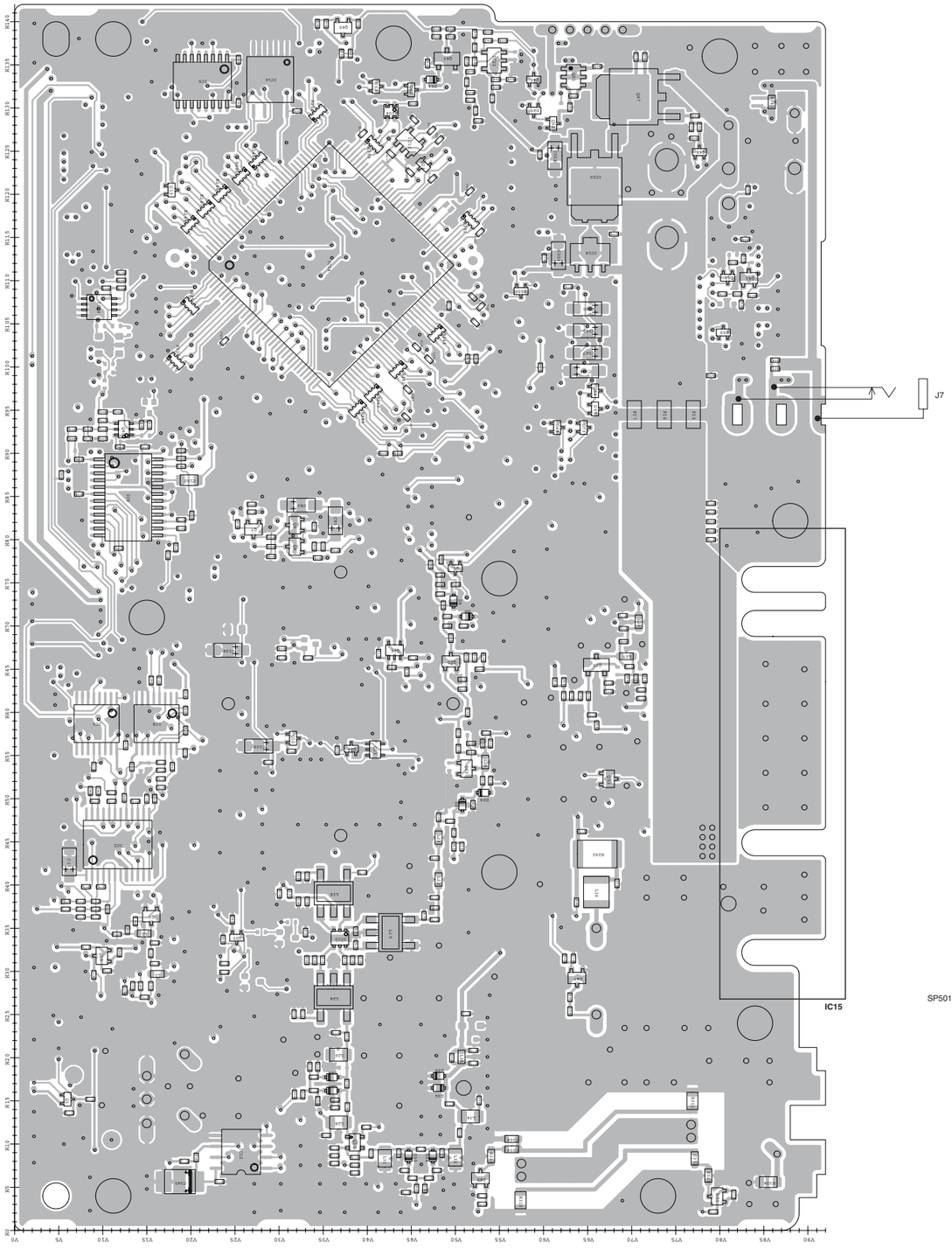

• CONNECT UNIT (BOTTOM VIEW)

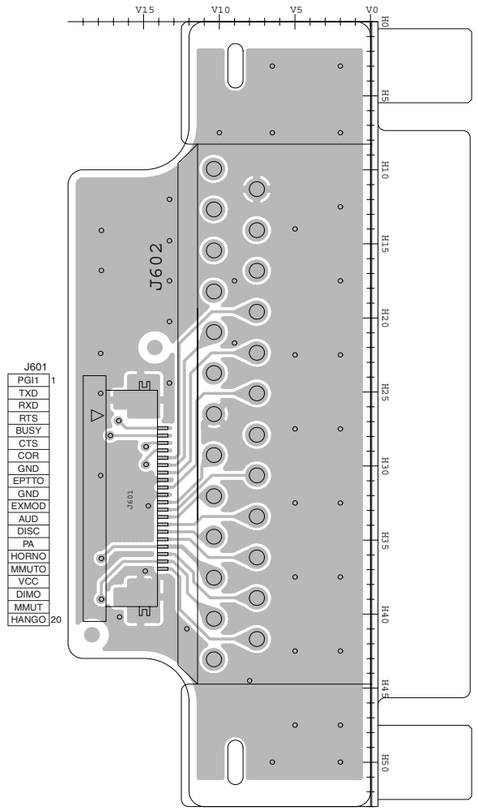

• HM-152 (BOTTOM VIEW)

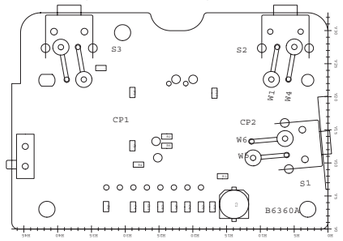

• FRONT UNIT (BOTTOM VIEW)

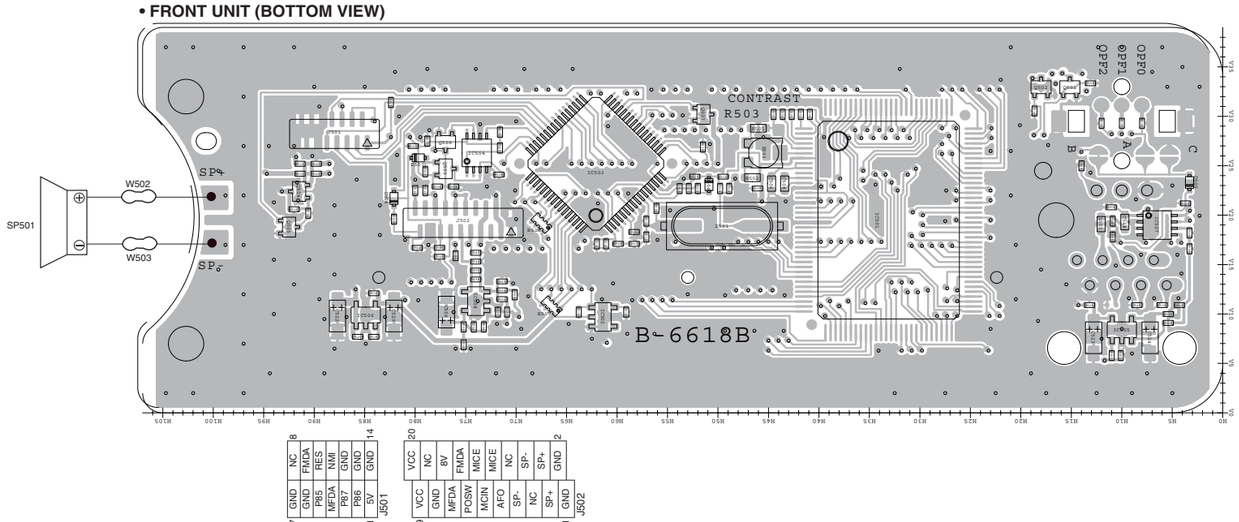

SECTION 10 BLOCK DIAGRAM

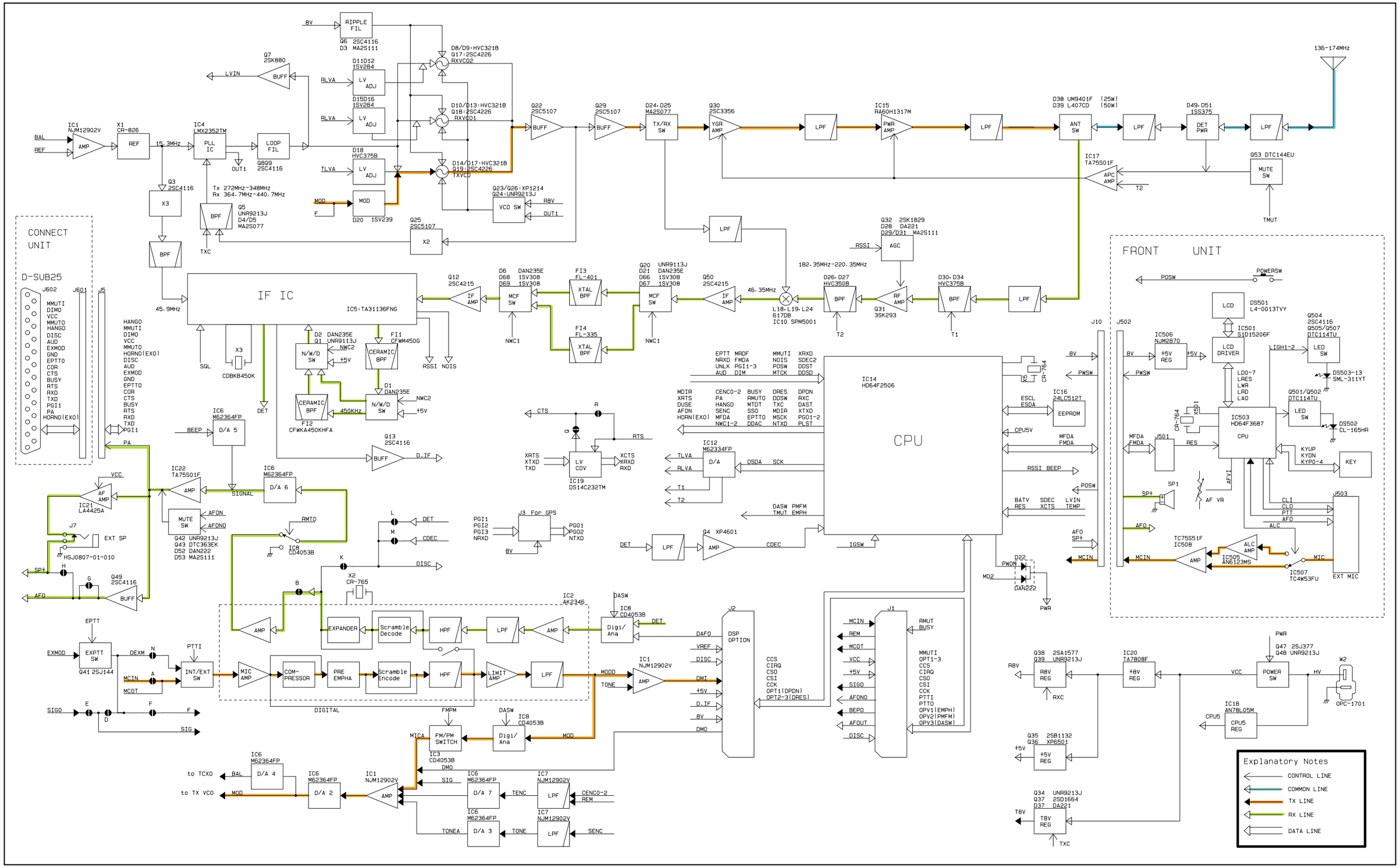

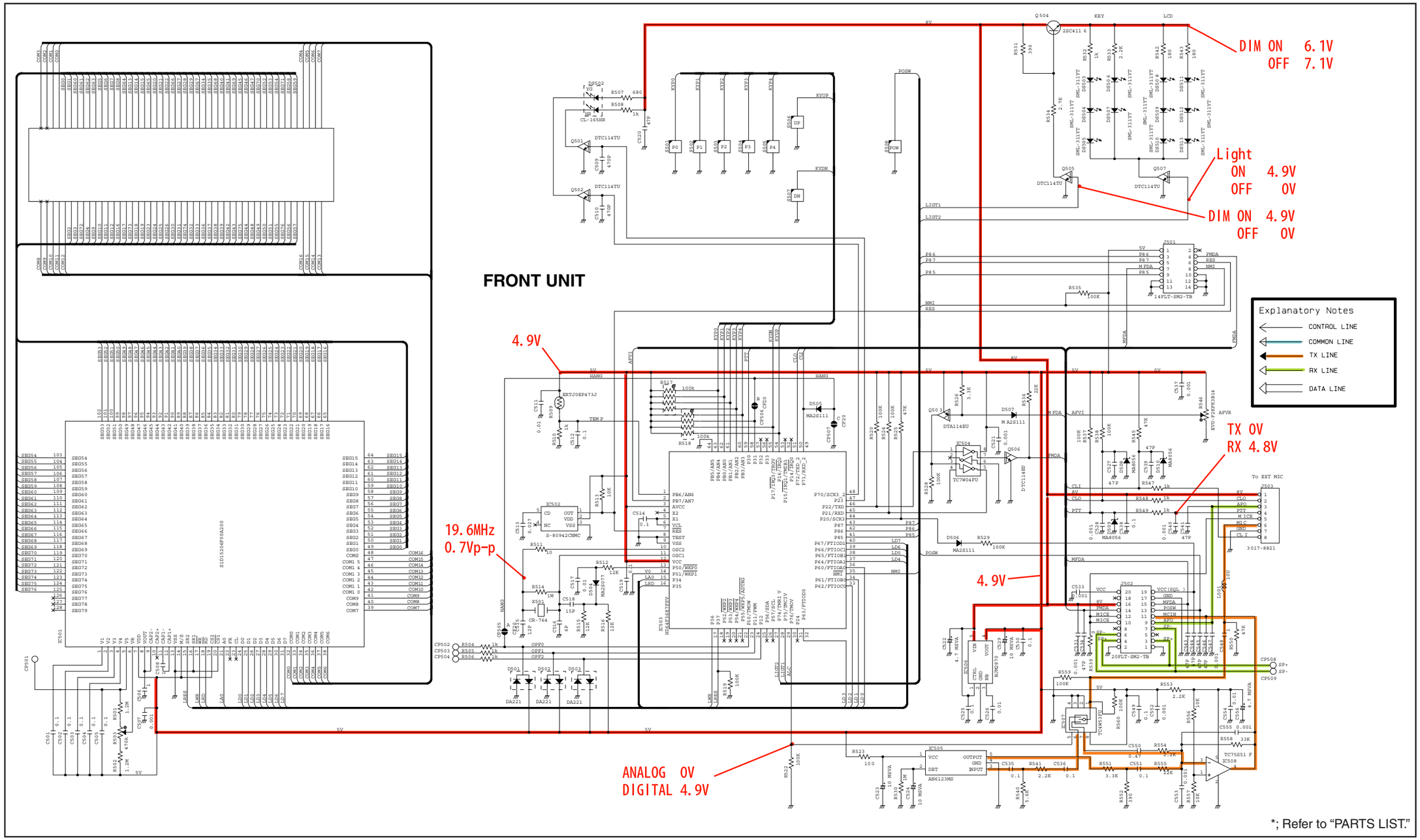
FRONT UNIT
DIM ON 6.1V
OFF 7.1V
Light
ON 4.9V
OFF 0V
DIM ON 4.9V
OFF 0V
4.9V
TX 0V
RX 4.8V
19.6MHz
0.7Vp-p
4.9V
ANALOG 0V
DIGITAL 4.9V
Explanatory Notes
CONTROL LINE
COMMON LINE
TX LINE
RX LINE
DATA LINE
*; Refer to "PARTS LIST."

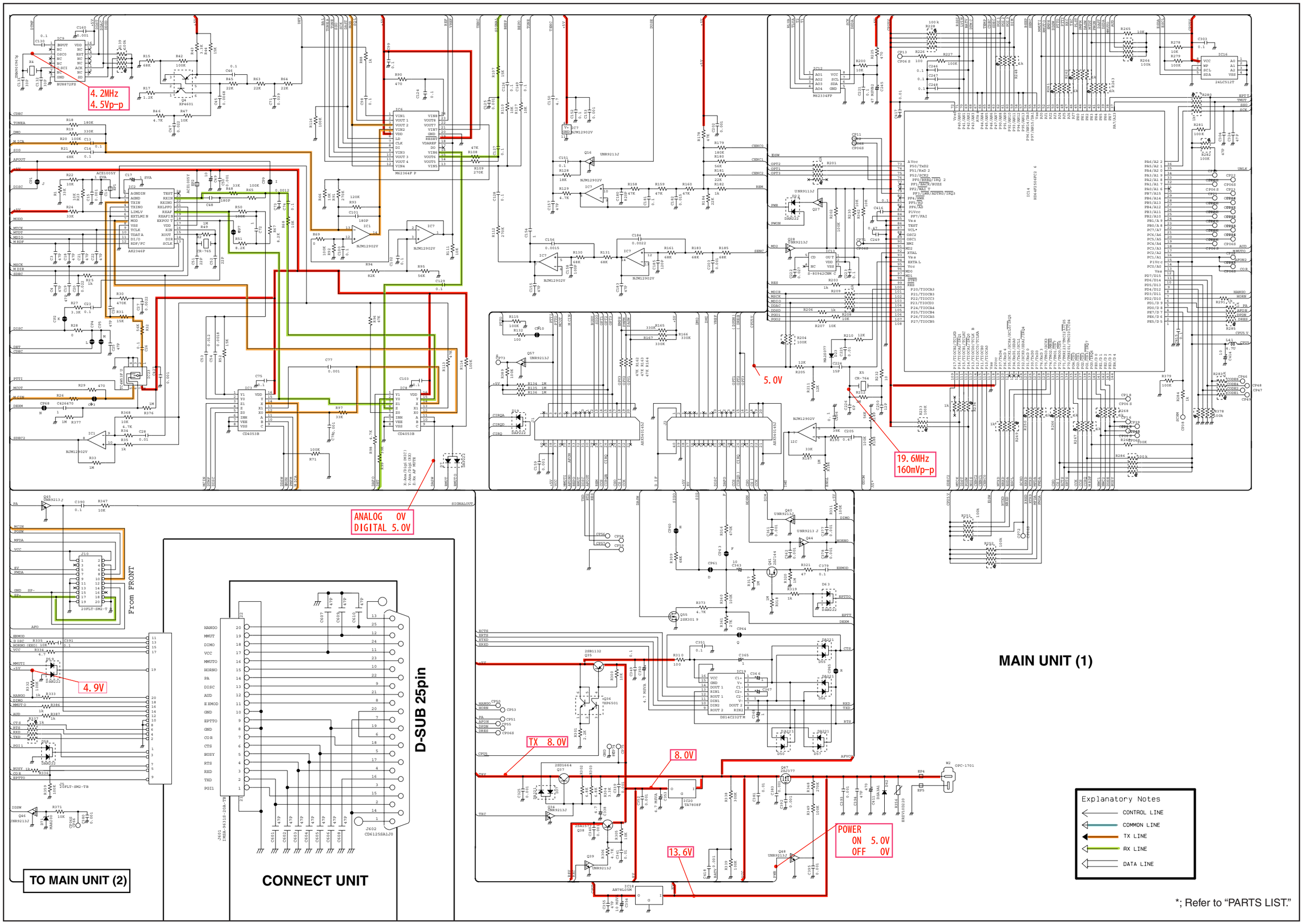

*; Refer to "PARTS LIST."

MAIN UNIT (2)

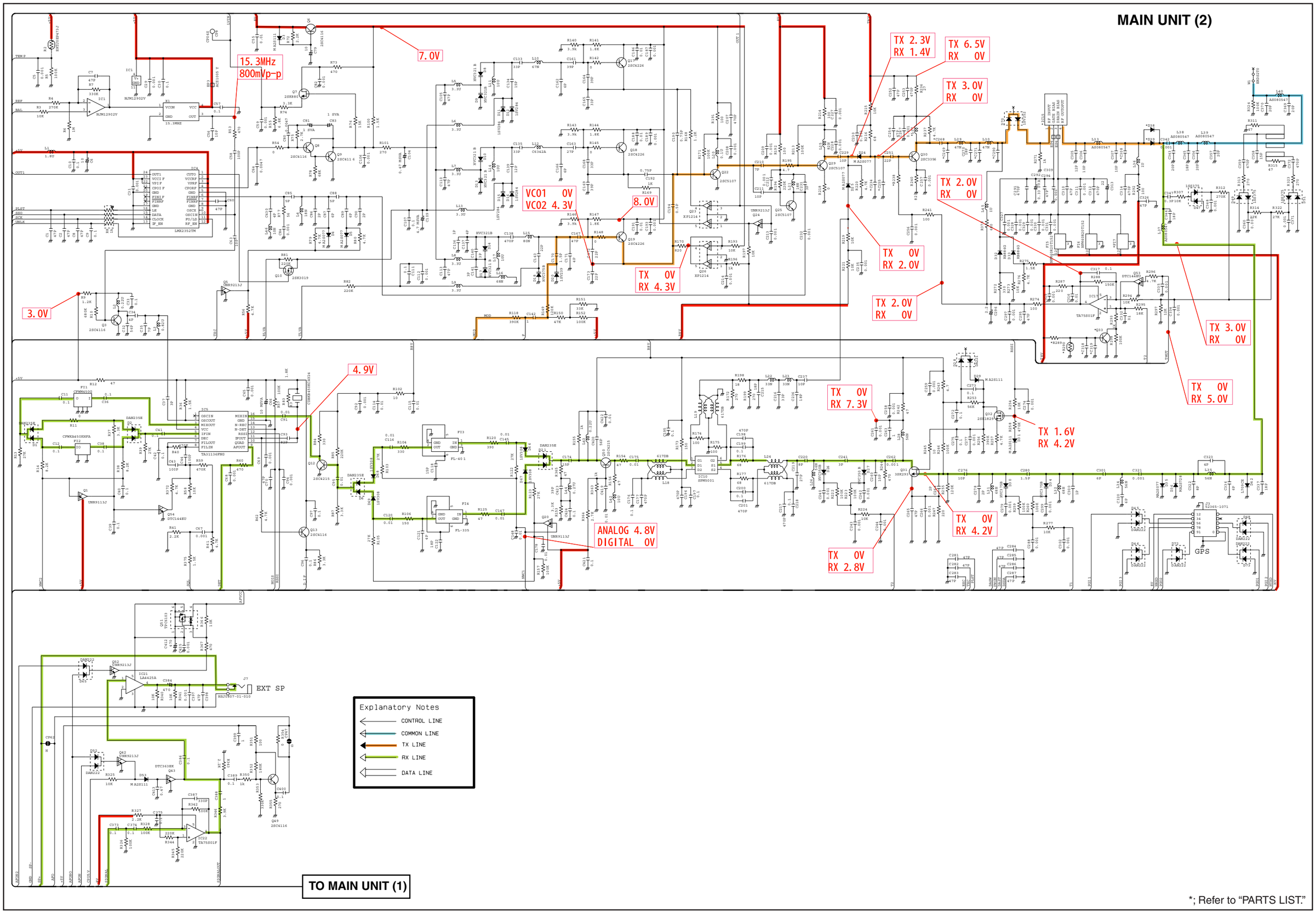

*; Refer to "PARTS LIST."

• ELECTRIC PARTS

[MAIN UNIT]

REF NO.	ORDER NO.	DESCRIPTION
R1	7030011410	S.RES ERJ3GE YJ 222
R2	7030011410	S.RES ERJ3GE YJ 222
R3	7030011420	S.RES ERJ3GE YJ 562
R4	7030011410	S.RES ERJ3GE YJ 222
C1	4510009230	S.ELE EEE1HA010SR
C2	4030018990	S.CER C1608 JB 1H 102K
C3	4030019000	S.CER C1608 JF 1H 104Z
C4	4030019010	S.CER C1608 JB 1H 103K
C5	4030018990	S.CER C1608 JB 1H 102K
C6	4030018990	S.CER C1608 JB 1H 102K
C7	4030018990	S.CER C1608 JB 1H 102K
C8	4030018990	S.CER C1608 JB 1H 102K
C9	4030018990	S.CER C1608 JB 1H 102K
C10	4030019000	S.CER C1608 JF 1H 104Z
C11	4030018990	S.CER C1608 JB 1H 102K

• MECHANICAL PARTS

[CHASSIS PARTS]

REF NO.	ORDER NO.	DESCRIPTION	QTY.
W1	8900014230	OPC-1471	1
W2	9028540010	AWG24 L=70 GRAY	1
MP2	8210022100	2854 S-FRONT PANEL	1
MP5	8210022120	2854 TOP PANEL	1
MP6	8930067080	2854 PTT BUTTON	1
MP7	8610012570	2854 SW BUTTON	1
MP8	8210022110	2854 SIDE PANEL	
MP9	8930067120	2854 PTT RUBBER	1
MP10	8930067140	2854 MIC SEAL	1
MP11	8930067180	2854 16-KEY	1
MP12	8610012580	2854 HANGER KNOB	1
MP14	8930067100	2854 WEIGHT	2
MP15	8930067150	2854 PTT SPRING	1
MP17	8310066000	2854 NAME PLATE (G)	1
MP18	8810010520	Screw B0 3X16SUS	3
MP19	8810010530	Screw BiH M4X14 SUS	1
MP20	8810010240	Screw BT B0 2X6NI	3
MP23	8850002000	SPRING WASHER M4 SUS	1
MP24	8860001380	earth lug B3 (M4) BS AG	1

• VOLTAGE DIAGRAM

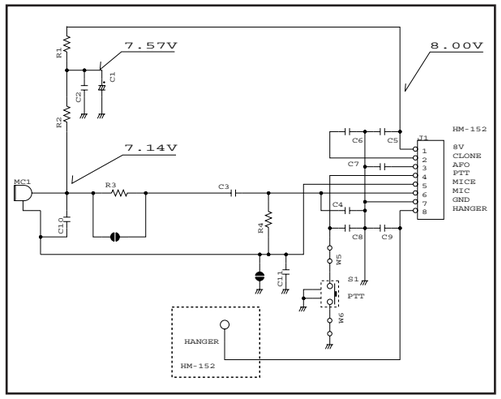

[MAIN UNIT]

REF NO.	ORDER NO.	DESCRIPTION	QTY.
J1	6510025100	CON IL-S-8P-S2L2-EF	1
MC1	7700002720	MIC F9745AP382-101	1
S1	2260002890	SW SKQJLBA010	1

• EXPLODED VIEW

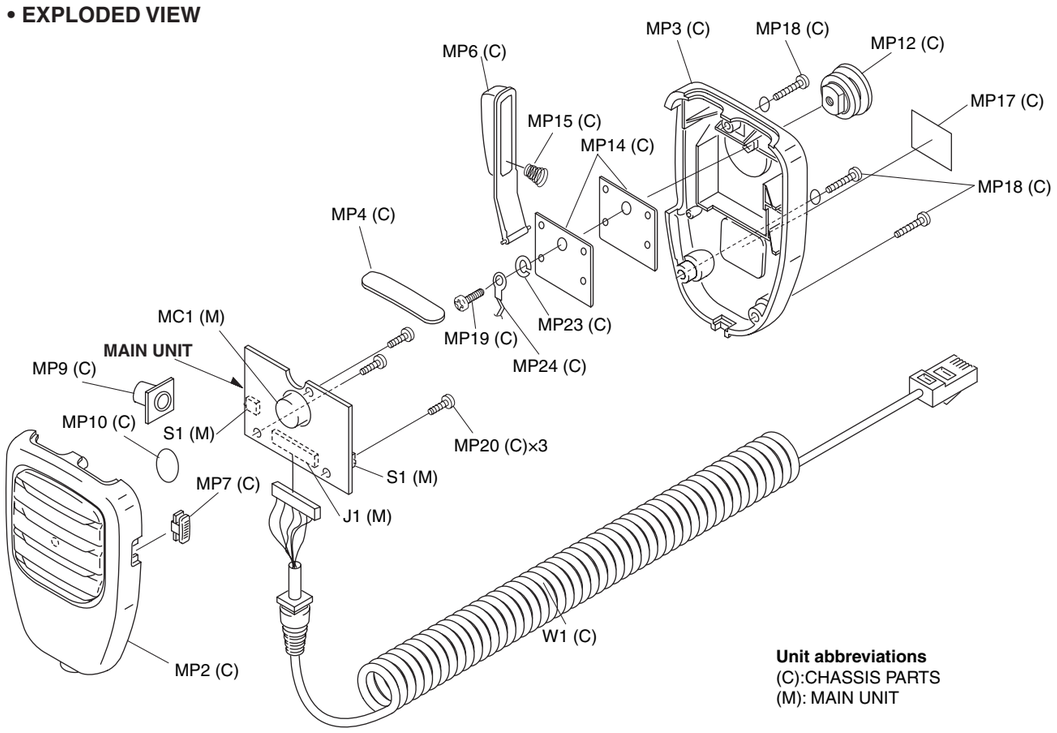

Icom Inc.

1-1-32, Kamiminami, Hirano-ku, Osaka 547-0003, Japan
Phone : +81 (06) 6793 5302
Fax : +81 (06) 6793 0013
URL : http://www.icom.co.jp/world/index.html

Icom America Inc.

<Corporate Headquarters>
2380 116th Avenue N.E., Bellevue, WA 98004, U.S.A.
Phone : +1 (425) 454-8155 Fax : +1 (425) 454-1509
URL : http://www.icomamerica.com
E-mail : sales@icomamerica.com
<Customer Service>
Phone : +1 (425) 454-7619

Icom Canada

Glenwood Centre #150-6165
Highway 17 Delta, B.C., V4K 5B8, Canada
Phone : +1 (604) 952-4266 Fax : +1 (604) 952-0090
URL : http://www.icomcanada.com
E-mail : info@icomcanada.com

Icom (Australia) Pty. Ltd.

Unit 1 / 103 Garden Road, Clayton VIC 3168 Australia
Phone : +61 (03) 9549-7500 Fax : +61 (03) 9549-7505
URL : http://www.icom.net.au
E-mail : sales@icom.net.au

Icom New Zealand

146A Harris Road, East Tamaki,
Auckland, New Zealand
Phone : +64 (09) 274 4062 Fax : +64 (09) 274 4708
URL : http://www.icom.co.nz
E-mail : inquiries@icom.co.nz

Beijing Icom Ltd.

10C07, Long silver Mansion, No.88, Yong Ding
Road, Haidian District, Beijing, 100039, China
Phone : +86 (010) 5889 5391/5392/5393
Fax : +86 (010) 5889 5395
E-mail : bjicom@bjicom.com
URL : http://www.bjicom.com

Icom (Europe) GmbH

Communication Equipment
Auf der Krautweide 24
65812 Bad Soden am Taunus, Germany
Phone : +49 (6196) 76685-0 Fax : +49 (6196) 76685-50
URL : http://www.icomeurope.com
E-mail : info@icomeurope.com

Icom Spain S.L

Ctra. Rubi, No. 88 Bajos A 08174, Sant Cugat del Valles, Barcelona, Spain
Phone : +34 (93) 590 26 70 Fax : +34 (93) 589 04 46
URL : http://www.icomspain.com
E-mail : icom@icomspain.com

Icom (UK) Ltd.

Blacksole House, The Boulevard, Altira Business Park, Herne Bay, CT6 6GZ, UK
Phone : +44 (01227) 741741 Fax : +44 (01227) 741742
URL : http://www.icomuk.co.uk
E-mail : info@icomuk.co.uk

Icom France s.a.s.

Zac de la Plaine
1 Rue Brindejonc des Moulinais BP 5804
31505 Toulouse Cedex, France
Phone : +33 (5) 61 36 03 03 Fax : +33 (5) 61 36 03 00
URL : http://www.icom-france.com
E-mail : icom@icom-france.com

Asia Icom Inc.

6F No.68, Sec. 1 Cheng-Teh Road, Taipei, Taiwan, R.O.C.
Phone : +886 (02) 2559 1899 Fax : +886 (02) 2559 1874
URL : http://www.asia-icom.com
E-mail : sales@asia-icom.com

Icom Polska

81-850 Sopot, ul. 3 Maja 54, Poland
Phone : +48 (58) 550 7135 Fax : +48 (58) 551 0484
E-mail : icompolska@icompolska.com.pl

Count on us!

Icom Inc.
1-1-32, Kamiminami, Hirano-ku, Osaka 547-0003, Japan

S-14319XZ-C1
© 2007 Icom Inc.